Law of Family

Prepared by

habl kindu

Course outline

- **Chapter one: General Consideration**
- Introduction to Family Law
- **Chapter Two: Marriage**
- Modes of Conclusion of Marriage
- Essential Conditions of Marriage
- Effects of Violation of Essential Conditions of Marriage
- **Chapter Three: Effects of Marriage**
- Pecuniary Effects
- Personal Effects of Marriage
- **Chapter Four: Proof of Marriage**

Cont…

- **Chapter Five: Dissolution of Marriage**
- Grounds of Dissolution
- Effects of Dissolution of Marriage
- **CHAPTER SIX**- Irregular Union
- **CHAPTER SEVEN**- Filiation
- **CHAPTER EIGHT**-Adoption
- **CHAPTER NINE**- Obligation OF Supply Maintenance
- **CHAPTER TEN**- **SETTLEMENT OF DISPUTES**

Chapter One:
General Considerations

- Introduction
- Definition of Family and Family Law
- Rationale for the recognition and protection of family
- International and national sources of family law
- Sources of family relationships
- Effects of family relationships

Introduction

- Family is the **basic unit of a society** which has social and economic importance in any society;
- Family is unit or cell of the state
- **Family-Society relationship**:
- Naturally, persons bound by consanguinity and affinity are united to form the community.

cont..

- With time, the growing family has a tendency to become a tribe.
- The formation of a tribe entails the splitting up or disintegration of the family, so as to make a new and additional family in the society.
- Thus, considering its importance for society, societies have developed one branch of law solely dealing with issues related to the family, i.e., **Family Law.**
- Family need protection, to regulate family , to protect the state. a

- **What is Family**
- **Plano;**
- *Family is a group of persons who are united by marriage, by Filiation or even, but exceptionally, by adoption (narrow definition)*
- Another similar definition
- *Family is considered as 'a social group characterized by common residence, economic cooperation, and reproduction. It includes adults of both sexes, at least two of whom maintain a socially approved sexual relationship, and one and more children, own or adopted, of the sexually cohabiting adults.' (broad definition)*
-

Cont..

- Family is a group of persons related to one another. The r/s might be in blood / consanguineal/ , affinity i.e Marriage, adoption..
- Family: live together under the same administration.
- From the definitions given above, one can categorize the family into nuclear and extended family.
- ***The nuclear family***
- *The first and basic type of family organization is the nuclear family.*
- *Basically consists of a married man and woman with their offspring (including adopted child).*
- ***An extended family***
- *Consists of two or more nuclear families affiliated through an extension of the parent-child relationship rather than of the husband-wife relationship, i.e., by joining the nuclear family of a married adult to that of his parents.*
-

Cont..

- **Black's Law Dictionary:**
- 1. A group of persons connected by blood, by affinity, or by law
- 2. A group consisting of parents and their children.
- 3. A group of persons who live together and have a shared commitment to a domestic relationship.
- 4. **Blended family** - The combined families of persons with children from earlier marriages or relationships.
- 5. **Extended family;**
- 1. The immediate family together with the collateral relatives who make up a clan
- 2. The immediate family together with collateral relatives and close family friends.
- 6. **Immediate family;**
- 1. A person's parents, spouse, children, and siblings.
- 2. A person's parents, spouse, children, and siblings, as well as those of the person's spouse.
- 3. Stepchildren and adopted children are usually immediate family members.

Cont..

- **HRC, General Comment No.16: Article 17 of ICCPR;**
- Family has to be **interpreted broadly** to include all those **comprising the family** as understood in the society of the State party considered;
- Hence, the Committee notes that the **concept of the family** may differ in some respects from **State to State**, and even from **region to region** within a State, and that it is **therefore not** possible to give the concept **a standard definition**. (**see General Comment No.19: on Article 23 of ICCPR**);
- It follows that cultural traditions should be taken into account when defining the term “family” in a specific situation.

Cont..

- **Ethiopian Case**
- When we look at the Ethiopian laws, we wouldn’t find a standard definition of what constitutes family.
- Rather, the law, more particularly, the RFC left the matter for determination on a case by case basis providing only persons related either by consanguinity or affinity and between which marriage relationship is prohibited;

Cont..

- Despite this, when we take in to account the contents of **the RFC** which regulates marriage relationships, filiations, adoption, obligation to supply maintenance, and the issue of minor', it implies that at least these persons and relationships constitute the basis to give definition for family
- Still, the different regional contexts need to be taken into account in defining the scope of family; for example:
- **Oromo Mogassa system** - this is a system where an **Oromo or non-Oromo** person can be **incorporated in to an Oromo family** and will be **treated as family member** though the person has **no blood or marriage relationship with the family he is incorporated into….**

Cont..

- The definition of family may also differ in different contexts; for instance:
- Insurance law – related with compensations;
- Rural land law – related with intestate succession of rural land;
- Civil procedure law – regarding legal representation;
- Employment law – for employment injury related compensation
- Pension law – for the purpose of dependents pension payment
- Etc.

Cont..

- **Family Law**
- There is no generally accepted definition of family law.
- '***Family law*** *is usually seen as the* ***law governing the relationship between children and parents****, and between* ***adults in close emotional relationships****'.*
- **Black's Law Dictionary:**
- *The body of law dealing with marriage, divorce, adoption, child custody and support, child abuse and neglect, paternity and other domestic-relations issues.*
- *(More broadly) the bodies of law dealing with wills and estates, property, constitutional rights, contracts, employment, and finance as they relate to families.*

Cont..

Sources of Family Law

- Many areas of law can have an impact on family life: tax laws, employment laws, property laws, immigration laws as well as insurance laws have great connection with family law.
- Thus, **Family law has grown over the years to include**:
- legal aspects of phenomena thought to have a ‘family’ connection, such as domestic violence, child abuse, **marital rape**, homelessness and **pensions** (to name a few).

- Most importantly, the **constitution**, international human rights treaties which Ethiopia has ratified, the federal and regional family codes, and other legislations constitute formal sources of family law.
- In addition, customary, traditional and religious rules and norms **compatible with the constitution** and international human rights standards serve as sources of family law in Ethiopia.

cont,..

- **Rationale behind Recognition and Protection of the Family**
- There are various reasons for regulating and protecting the family
- The family is a **very important constitutive part of a society**. It has natural, economic as well as social importance.
- **the amount and length of care the child needs,** impose upon **his parents duties** which are not fulfilled in one day and which create the solid foundation of all of the **family relation.'**
- **Art.34 (3) of the FDRE Constitution;**
- *The family is the natural and **fundamental unit** of society and is entitled **to protection by society and the State**.*
- **Preamble para.1 of the RFC;**
- *The family, being the **natural basis of society**, shall be protected **by the society and the state, and that one of the means of protection is effected by regulating and governing family relation by law;***

Cont..

- The family is the **nucleus of the society**, and hence (the latter) much depends on its safety and security.
- Though **the family may contain only few people**, the impact that this unit has on the whole society is great. Factors affecting a **single family** will later on have the **effect of affecting the whole society**.
- Therefore, the state uses different means to regulate and control the formation as well as the effects of forming a family. One basic means of doing so is through legislations.

Cont..

- **International and national family laws;**
- ***Universal Declaration of Human Rights; Article 16***
- ***1. Men and women of full age**, without any **limitation due to race**, **nationality or religion**, have the right **to marry** and **to found a family**. They are entitled to **equal rights as to marriage, during marriage and at its dissolution.***
- *2. Marriage shall be entered into only with the **free and full consent of the intending spouses**.*
- *3. **The family is the natural and fundamental group unit of society and is entitled to protection by society and the State**.*

Cont..

- ***ICESCR – Article 10.1;***
- *The States Parties to* ***the present Covenant recognize that the widest possible protection and assistance should be accorded to the family****, which is the natural and fundamental group unit of society, particularly for its establishment and while it is responsible for the care and education of dependent children. Marriage must be entered into with the free consent of the intending spouses.*

Cont..

- ***ICCPR; Article 23;***
- ***The family is the natural and fundamental group unit of society and is entitled to protection by society and the State.***
- ***The right of men and women of marriageable age to marry and to found a family shall be recognized.***
- *No marriage shall* ***be entered into without the free and the full consent of the intending spouses****.*
- *States Parties to the present Covenant shall take* ***appropriate steps to ensure equality of rights and responsibilities of spouses as to marriage, during marriage and at its dissolution.*** *In the case of* ***dissolution, provision shall be made for the necessary protection of any children.***

cont...

- ***CEDAW – Article 16;***
- *States Parties shall take all appropriate measures to eliminate discrimination against women in all matters relating to marriage and family relations and in particular shall ensure, on a basis of equality of men and women:*
- *The same right to enter into marriage;*
- *The same right freely to choose a spouse and to enter into marriage only with their free and full consent;*
- *The same rights and responsibilities during marriage and at its dissolution;*

Cont..

- *The same rights to decide freely and responsibly on the number and spacing of their children and to have access to the information, education and means to enable them to exercise these rights;*
- *The same personal rights as husband and wife, including the right to choose a family name, a profession and an occupation;*
- *The same rights for both spouses in respect of the ownership, acquisition, management, administration, enjoyment and disposition of property, whether free of charge or for a valuable consideration.*
- ***The betrothal and the marriage of a child shall have no legal effect and all necessary action,*** *including legislation, shall be taken to specify* ***a minimum age for marriage*** *and to make the registration of marriages in an official registry compulsory.*

ACHPR-

- ***Article 21; Protection against Harmful Social and Cultural Practices***
- *2. Child marriage and the betrothal of girls and boys shall* ***be prohibited and effective action****, including legislation, shall be taken to specify the* ***minimum age of marriage to be 18 years*** *and make registration of all marriages in an official registry compulsory.*
- ***Protocol on the rights of Women's in Africa(PRW)***
- ***Article 6;*** *States Parties shall ensure that women and men enjoy equal rights and are regarded as equal partners in marriage. They shall enact appropriate national legislative measures to guarantee that:*
  - *No marriage shall take place without the free and full consent of both parties;*
  - *The minimum age of marriage for women shall be 18 years;*

CONT..

- *Monogamy is encouraged as the preferred form of marriage and that the rights of women in marriage and family, including in **polygamous** marital relationships are promoted and protected;*
- *the husband and wife shall, by mutual agreement, choose their place of residence;*
- *a woman and a man shall **have equal rights,** with respect to the nationality of their children except **where this is contrary to a provision in national legislation or is contrary to national security interests;***
- *During her marriage, a woman shall have the right to acquire her own property and to administer and manage it freely.*

CONT..

National laws;

- Federal and regional constitutions
- RFC and regional Family laws
- The civil code
- Employment laws of Ethiopia and others

Sources of Family Relationships

- There are three sources of family relationships namely, **marriage, Filiation and adoption**.
- **The status of the persons as well as the rights and obligations of the persons differs with the difference in the source of the relationship**.

CONT..

Relationship by consanguinity

- Relationship by consanguinity results from the **birth**.
- It is ‘the tie which exists between two persons, such as the son and the father, the grandson and the grandfather; or those who descend from a common ancestor, such as two brothers, or two cousins.’
- *The series of relatives who descend from each other form what is called **a line**.*
- *It is a **direct relationship** represented by a straight line going from one relative to the other, no matter how many intermediaries there may be.*
- *As to the relationship which unites two relatives descending from a common ancestor, it is called **collateral relationship***

CONT..

- *ancestor, it is called* ***collateral relationship****:*
- The following diagrams illustrate how the computation is to be undertaken
- **Grandfather**
- **Father**
- **Child**
- **Grandchild**
- **To reach to the degree of relationship** between persons related in **the direct line**, we simply count the number of **lines between them.**
- Here, the grandfather and the grandchild are related in the **third degree in the direct line.**

CONT..

- In calculating the degree of relationship in the collateral line, there are two ways, which will lead to different results.
- Let us have a look at the following diagram to have a clear understanding of the two systems

CONT..

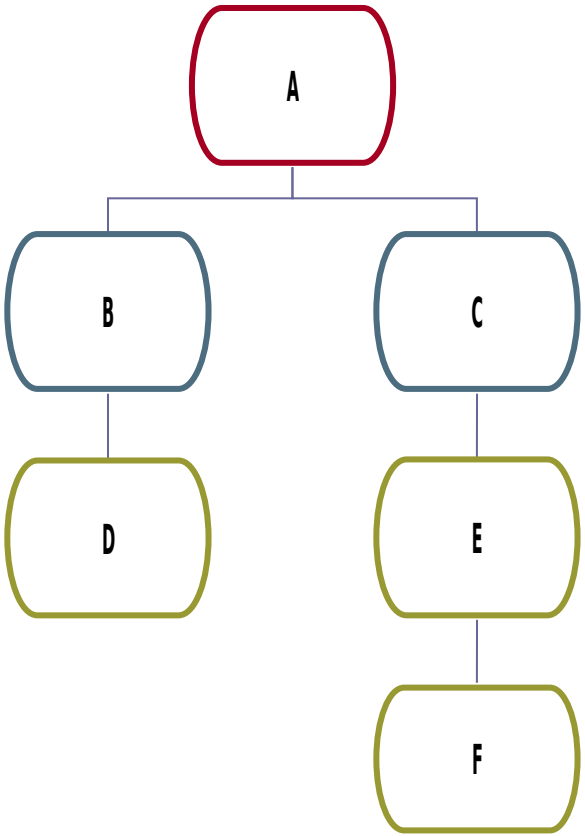

CONT…

- The children of A are related in the **collateral line**.
- If we are using the **Civil law system to calculate the degree of relationship between B and C**, who are brothers;
- We will add the two lines which are **departing from the common ancestor A.** Hence, **B and C** are related in the **second degree.**
- **B,** who is the uncle **of E**, is related to E in **the third degree**.
- **And B is related to F** in the **fourth degree.**
- On the other hand, if we use the Canon law, the result will be different.
- **The cannon law tells us to count only on one side.**
- When the two lines are equal, we will simply take one line.
- Accordingly, the degree of relationship between **B and C is** one.
- Conversely, if the lines are not equal, the longest line is to be taken.
- Hence, in the above diagram, B is related to F in the third degree.

- □ When we look into the Ethiopian Civil Code of 1960, it does not govern how the relationship in the direct line is to be computed.
- □ Article 551 tries to give some highlight on how the computation of relationship in the direct line is to be conducted.
- □ The Amharic version of the Code states as follows
- □□□ □□□□ □□□□□ □□□ □□□□ □□□□ □□□ □□□□□ □□□ □□□ □□□ □□ □□□ □□□□ □□□□ □□□ □□□ □□□□ □□□ □□□□
- However, this article only tells us that calculation of degree of relationship in consanguinal line is to be done by taking the common ancestor as a bench mark.
- Brainstorm:
- Does the Revised Federal Family Code regulate the manner of computation of degree of relationship? Why do you think is the reason?

Relationship by Affinity

- Relationship by affinity is created as a result of **marriage.**
- '*Relatives through marriage are persons who are not relatives, but which join the family by means of a marriage*.'
- When a marriage is concluded, the relationship is formed between one of the spouses with the blood relatives of the other spouse.
- 'The **two spouses are considered as being only one**, so that all the relationships of the one become, by the effects of marriage, common to the other.'

- One thing which needs to be noted here is the fact that the relationship created does not go beyond **spouses.**
- That means, a relationship does not exist between the relatives of one spouse with the relatives of the other spouse.

Relationship by Adoption

- Relationship by adoption is created as a result of a special contract between the adopter and the original families of the adopted child.
- Unlike blood relationship, it is a fictitious relationship which results from the agreement of the parties to the adoption contract. However, it is also an imitation of the real relationship.

CONT..

Effect of Family Relationship

- There are various effects which resulted from the relationship;
- relationships give rights; they also create obligations, and also carry incapacities.
- Hence, we can talk about three effects of a relationship:

- *Creation of rights,*
- *Creation of obligations and*
- *Making the related persons incapable of performing some juridical acts.*

CONT..

- **Rights emanating from a relationship**:-
- Relationship results in the right of the relatives to take the **estate of the deceased relative**. That is to say, a **right of succession** is one of the effects of a family relationship.
- There is also the right of **destitute relatives to get maintenance** from the other relatives.
- Parents will also have a r**ight over the person and the estate of their children.**
- For instance, article 198 of the RFC provides that the obligation to **supply maintenance exists between ascendants** and descendants and also between persons who are related by affinity in the direct line.

CONT…

Obligations emanating from relationship:

- The first obligation is that of alimony.
- Relatives have the **obligation to provide alimony for the destitute relatives** who cannot have their own means of income.
- There is also the **duty on the parents to take custody and raise their children**.
- In this regard, article 219 of the RFC puts an obligation on the father and mother of the minor child to be the **joint guardian and tutors during** the life time of their marriage.
- Taking **custody of children also involves making decisions** in respect of the health, education as well as social contacts of the child. Articles 255ff articles of the RFC provide by way of obligation on the parents to take care of the health, residence, education as well as social contact of the minor child.
- On top of this, there may be property inherited by the child. The parents or in their absence, the ascendants will have **the obligation to administer the property on behalf of the child**.

CONT…

- **Relationships may also result in incapacities of the persons involved**.
  - The law prohibits marriage between close relatives. The incapacity to marry is one type **of incapacity resulting from relationship**;
  - For instance, under Article 32 of the RFC as well as the regional family codes relationship is provided as one essential condition for the conclusion of marriage.

Chapter Two

Marriage

- **Introduction**
- The previous chapter presented the meaning of **family a**s well as the **sources of relationship** of **family**.
- As you have correctly observed, one and the major source of family **relationship is marriage.**
- Betrothal
- Modes of conclusion of marriage;
- Effect of violation essential conditions

Cont….

- **Betrothal**
- In earlier times, **before two persons conclude marriage**, they would go through the process of betrothal which was mainly concluded between the parents of the future spouses;
- it is **a promise of marriage**.
- **Betrothal is defined under article 560 of the civil code of Ethiopia as;**
- "***a contract between the members of two families*** *that a marriage* ***shall take place between two persons****, the fiancé and the fiancée, belonging to these two families*."
- Hence, **more emphasis is given to the choice, consent and interest of these family members rather than the future spouses**

Cont..

- Moreover, in many circumstances the practice shows that betrothal was concluded ***when the future spouses are underage and sometimes not yet born*.**
- This means, **interest and choice** of the future spouses **will not** be considered at all.
- On the other hand, the FDRE Constitution of 1995 recognizes the right of individuals to form a family with their **own free and full consent** – see **Article 34 (1 and 2).**

Cont..

- Moreover, **international and regional human rights** standards prohibit **betrothal;**
- **ICCPR - Article 23:**
- *No marriage shall be entered into **without the free** and **full consent** of the intending spouses.*
- **Art. 16 of CEDAW;**
- *The **betrothal and the marriage of a child shall have no legal effect**.*

Cont..

- ***ACHPR- Article 21***
- ***Child marriage*** *and the* ***betrothal*** *of girls and boys shall be* ***prohibited.***
- As result, the provisions of the Civil Code dealing with betrothal found to be contrary to this fundamental right of spouses and, hence, ***the RFC has excluded the concept of betrothal as a whole***.
- **some regional family codes maintain betrothal**; but with **modification.**
- Articles 1-8*of the Amhara National Regional State Family Code Proclamation No.79/2003;*
- *Articles 1-10 of* ***SNNPRS*** *Family Code, Proclamation No.75/2003;*
- *See* ***also article 8*** *of the Benishangul Gumuz regional state family code*.
- **Tigray Regional State Family Code, Proclamation No.116/2007 is silent on the issue of Betrothal;**

- The **major modification** made relates to the definition given to betrothal. ***It is a pact*** *between the* ***fiancé*** *and* ***fiancée*** *to conclude marriage sometime in the future.*
- Civil Code **between** the parents or guardians of the future spouses.
- ***Formality Requirements:***
- Article 5 of the Family Code of the Amhara region;
- *Requires the* ***contract of betrothal*** *to be made in a written form signed by four family witnesses, two from each side*

Cont..

- On the other hand, the family code of the Benishangul Gumuz region
- *Allows betrothal to be concluded pursuant to the custom of the area; this may be either in writing or orally, whichever is customarily practiced in the region.*
- When we look into article 4 of the SNNP regional family code, both options are included.
- *If one of the parties to the betrothal contract communicate their intention to* ***invalidate the betrothal****, or refuse to conclude marriage the betrothal contract will be invalidated.*

Effect of Invalidation of betrothal contract:

- Article 8 of SNNPR Family Code:
- Obligation to return payments and gifts made due to betrothal’
- Obligation to pay moral compensation;
- Compensation is to be fixed by courts based on equity and local custom; but, it can’t be more than 10,000 Birr.
- Two years period of limitation is also there;
- All the above doesn’t work if the contract is terminated due to death.
- Article 7-9 of Amhara Family Code:
- Obligation to cover all costs incurred by the other party to execute the ceremony and return any present received by the party or his families;
- Provided that the contract is breached for insufficient or unjustifiable cause.
- One year period of limitation is there.

CONT..

- **Mehari Redae;**
- **Betrothal** can’t be a condition precedent for marriage;
- Though it is socially and culturally recognized, since it is not uniformly practiced throughout the country it is irrelevant to include in a federal legislation;
- The **RFC derecognize betrothal**; but, **don’t prohibit** at all unless it contrary to the constitution.

- ***Is marriage a status or contract?***
- Marriage may be regarded as either a **status** or **a contract**.
- As Jonathan noted
- *Marriage could be regarded as either a status or a contract.*
- *In law a status is regarded as a **relationship** which has a set of legal **consequences** which flow automatically from that relationship, regardless of the intention of the parties.*
- *A status has been defined as 'the condition of belonging to a class in society to which the law ascribes peculiar rights and duties, capacities and incapacities.'*
- *So the status view of marriage would suggest that, if couples marry, then they are subject to the law governing marriage, regardless of their intentions.*

Cont..

- *The alternative approach would be* ***to regard marriage as contract:****.*
- *The* ***legal consequences of marriage*** *would then flow from the intentions of the* ***parties as set out in an agreement*** *rather than any given rules set down by the law.*
- Marriage is perhaps best regarded as a mixture of the two. There are some legal consequences which flow automatically from marriage and other consequences which depend on the agreement of the parties. The law sets out: who can marry, when the relationship can be ended and what are the consequences for the parties of being married.
- In Ethiopia, marriage is regarded in both the Civil Code, the Revised Family Code and the regional family codes **as an institution, rather than a simple status, contract or both**.
- However, when it comes to defining this institution, the laws are not helpful;
- Hence, to have a common understanding of the institution, it is necessary to resort to the definitions given by other foreign laws.

Cont…

- **Black's Law dictionary - marriage is:**
- *The legal union of a couple as husband and wife.*
- *marriage, …, is a civil, and not a religious institution, or*
- *that … in some states mutual consent alone without formal celebration is sufficient to constitute a valid marriage known as a common law marriage, or*
- *that, as is true in all states,* ***the mutual consent of the parties*** *is* ***essential,*** *even in the case of a ceremonial marriage."*

Cont..

- **definitions contain three common elements;**
- The marriage has to be concluded **between a man and a woman,** there is no legal marriage between **same sex persons;**
- *But, there are countries that legally **recognize same sex marriage;***
- *Not doing so or criminalization is often seen as **discrimination based on sexual orientation and** thus, **human rights violations.***
- Concluding observation **of HRC** on Ethiopia concerning same sex marriage;
- *The Committee is concerned about the **criminalization of "homosexuality ….such criminalization violates the rights to privacy** and to **protection against discrimination** set out in the Covenant.*

Cont..

- The institution of marriage is to be entered into **with the absolute consent of the parties** i.e., voluntarily; and
- Marriage is expected to **last for a life time**, death being the only cause for dissolution.
- The definitions given by the different legal systems **have their own shortcomings**;
- *All the documents tend to be ideal in the sense they expect the union to last for life, while in reality marriages breakdown for different reasons other than death;*
- *Moreover, the central aim of concluding marriage seems to be establishment of a family and beget, while in reality, some couples conclude marriage knowing that they cannot have their own children.*
- *some consider that marriage is entered into create* ***common property,*** *this will not also be an element as it is possible for the couples to exclude such effects of* ***marriage by mutual agreement*****.**
- Taking into account the insufficiency of the definitions given by many foreign laws, the Ethiopian legislature opted not to give any definition at all.

Cont..

- “ጋብቻ የሚለው ቃል በአነደ በኩል ጋብቻ ውስጥ ለመግባት የሚደረገውን ሥርዓት የሚመለከት ሲሆን በሌላ በኩል ጥምረቱን ለመመስረት የሚከናወነው ሥርዓት ከተፈጸመ በኋላ ወይም ጋብቻ ለመመስረት የሚያስፈልጉ ሥርዓቶች ከተሟሉ በኋላ የሚመሰረተውን ግንኙነት /ትብብሩን፤ ትዳር/ የሚመለከት ይሆናል።”
- “ከዚህ በመነሳት በዚህ ሕግ ጋብቻ የሚለው ቃል የአፈጻጸም ሥርዓቱን የሚያመለክት ሲሆን በሶስት ዓይነት ሥርዓቶች ሊፈጸም ይችላል።”

- **So** the term '**marriage'** has two possible meanings according to the Revised Family Code:
- *One, it shows the process/procedure/celebration to enter into or for conclusion of marriage; and*
- *On the other hand, it shows the relationship formed or created after the celebration process; i**.e., the institution of family itself.***
- ***Finally, the* raison d'être *adheres to the first meaning and concludes that, the term marriage under Articles 1-4 implies:***
- *The modes of conclusion of marriage; and according to the RFC marriage can be concluded in three modes: civil, religious and customary*

Cont..

Modes of Conclusion of Marriage – RFC

- **Article 1. – Various Forms of Marriage.**
- The **Revised Federal Family** Code as well as the Regional Family Codes recognized three **modes of** conclusion of marriage. These are:
- ***Civil Marriage***
- ***Religious Marriage and***
- ***Customary Marriage(*****Norm marriage**)

Cont..

Civil Marriage

- ***Marriage Concluded before an Officer of Civil Status (Art- 2)***
- *Marriage shall be deemed to be concluded before an officer of civil status when **a man and a woman** have appeared before an officer of civil status for the purpose of concluding marriage and the officer of civil status has accepted their respective **consent.***

- **RFC *Article 321 – Registration* of marriage**
- ***The Federal Government shall, within six months from the coming into force of this Code, issue registration law applicable to the Administrations where this Code is to be enforced and establish the necessary institutions.***
- The 1960 Ethiopian **Civil Code** provides for the establishment and the **duties** of the office of civil status.
- **Art. 3361 -Registers of civil status.**
  - *Art. 48-55, 57-70, 72-77, 79-131 and 133-145 shall not come into force until a day to be notified by Order published in the Negarit Gazeta.*
  - *Until the coming into force of the Articles specified in sub-art. (1), proof of birth, marriage and death shall be made by producing acts of notoriety drawn up in accordance with the provisions of Art.146-153*

Cont…

- However, implementations of the provisions which deal with this office have been made to wait for the issuance of an Order to be published in the Negarit Gazeta, which has never come into life.
- As a result, currently there is no established office of civil status. In municipal areas, the functions of the officer of civil status are assumed and performed by the **municipalities.** For instance in Addis Ababa the offices of the *Kifle ketemas* are the ones who oversee the performance of civil marriages.

- **Regarding Registration of marriage;**
- **Articles 28 ff of RFC**
- Marriage shall be registered by a **competent officer of civil status**;
- The Officer who recorded shall issue a **certificate of marriage** to the spouses;
- Marriage shall have effect from the **date of conclusion.**

Cont..

- **Proclamation No. 760/2012 – Registration of vital events:**
- Art. 2 (3); - "**Office of Civil Status"** means an officer assigned to register vital events …
- Article 18t of the Proc. – **period of registration;**
  - Any vital event(marriage, divorce..), **other than birth**, shall be registered ***within 30 days*** following the date of its occurrence unless there is sufficient **cause for delay**
  - Where the registration … is not effected within the period specified … the declarant shall produce evidence to justify the **delay.**

Cont..

- **Articles 30 of RFC** - particulars of records of marriage:
- The couples **full name**, **date** and **place of birth**, principal **residence**, **citizenship**, **ethnic origin** and **religion;**
- The date, place and form of the marriage;
- Signature; Witnesses name and principal residence;
- Name and signature of the Officer of civil status, seal of the administrative office and date of registration; and
- Other necessary information.

Cont..

- **Article 31 of Vital Events Proclamation** – obligation to declare marriage.
- *Where marriage is **celebrated before** an office of civil status, the officer of civil status who observed the marriage ceremony shall **immediately register the marriage**;*
- *Where marriage is celebrated by religious or customary ceremony, the couples shall present to an officer of civil status, for registration, the evidences of the marriage …*
- **Formalities and requirements for civil marriage;**
  - ***Residence***
- **Article 22 of RFC** - Authorized Officer of Civil Status.
- *Civil marriage shall be concluded before the officer of civil status of the place where one of the future spouses or one of the **ascendants** or close relatives of one of them has **established residence** by **continuously living** **there for not less than six months prior to the date of the marriage**.*

- It has to be noted, however, Article 22 of RFC is about conclusion of civil marriage whereas Article 32 of the Proc. is **about registration of marriage.**
- See Arts. ***174ff of the civil code*** regarding residence of person.
- Art. 174. - **Definition.**
- The residence of the person is the place where he normally resides.
- Art. 175. -Mere sojourn in a place.
- The mere fact that a person is for a **time in a certain** place shall not be sufficient to constitute for him a **residence** in such place.
- *Notwithstanding the provisions of sub-art. (1), a residence is acquired whenever the sojourn is to last, or has lasted, in fact, more than* ***three months.***
- Art. 177. -Several residences.
- A person may have several residences.
- One of such residences may have the character of principal residence, and the other **residences** that of secondary residences.

Cont..

- In determining existence of **a residence**, the ***notion of normality*** *and* ***intention of the person concerned are vital***.
- In addition to this, Article 175/2 (of the Civil Code) requires staying in a particular place for a minimum of **three months** to constitute **residence.**
- 'Although the code does not settle the point, it seems that the period of three months must be **uninterrupted.'**
- However, when it is for the purpose of **conclusion of marriage,** this article of the **Civil Code** is qualified by virtue of article **22** of the **RFC.**
- As a result, *those persons enumerated under* ***article 22 of the RFC have to reside*** *in the* ***place for a continuous*** *period of six months*.
- **uninterrupted one**.

- ***Giving notice.***
- Article 23 of RFC - **Request for Celebration of Marriage.**
- *The future spouses shall inform, the officer of civil status of their intention to conclude marriage* ***not less than one month prior*** *to its celebration*.
- Article 24 of RFC - **Fixing the Date of Marriage**.
- *Upon receipt of the request, the officer of civil status shall, in consultation with the future spouses, decide the exact date of the conclusion of marriage and publicize same by any appropriate means.*

CONT..

- **The purpose of notifying the officer is**

- to make sure that there **are no impediments** to the conclusion of marriage and to allow anyone who want to **oppose** to the marriage to do so in accordance with the law.
- This can be **understood from the requirement** on the part of the **officer** to publicize the notification stipulated under the same article as well as the subsequent articles of the Code.
- ***The celebration (solemnization) of marriage.***
- Once these **preliminary formalities** are fulfilled and the work of publicizing the intention of the parties to marry has been made by the civil status officer, the next step is **celebration** of marriage.

CONT..

- **Art. 25 of RFC; Formalities of Celebration.**
- *Marriage shall be concluded publicly in the presence of the future spouses and* ***two witnesses for each of the future spouses.***
- *The future spouses and the witnesses shall declare, under oath, that the* ***essential conditions of marriage are not violated.***
- *The officer of civil status shall inform the future spouses and their witnesses, before taking oath, of the consequences of their declaration.*
- *Each of the future spouses shall declare openly to the officer of civil status that they* ***consented*** *to conclude marriage on their own free will.*

Cont..

- *Each of **the spouses** and **their witnesses shall sign** in the register of civil status.*
- *Upon fulfillment of the formalities prescribed above, the officer of civil status shall **pronounce them united in marriage and** shall issue a **certificate of marriage to that** effect.*
- **celebration** is to be made publicly in the presence of the **future spouses** and two witnesses for each of the future spouses.
- One requirement stipulated under article 25 of the RFC is that the future spouses have to personally appear for the **solemnization process.** In connection to this requirement, the issue of proxy marriages can be raised.

- *Do you think that the future spouses need to be present before the officer of Civil status to celebrate their marriage? Is it always mandatory for the future spouses to be present or is it possible to conclude marriage through representation*

- **Art. 586 of the civil code – Representation not allowed.**
- *Each of the spouses shall personally consent to the marriage at the time of its celebration.*
- *Representation shall not be allowed unless a dispensation be given for **good cause** by the Advocate General*.

Reason for prohibition is

- To ensure free will and consent, each of the spouses shall personally be present and consent to marriage.
- However, considering the **possibility of serious causes** which may limit personal presence, the code allow for **proxy.**

CONT..

- **Considering the need to conclude marriage by representation, the Civil Code of 1960 as well as the RFC allowed by way of exception for the conclusion of marriage through representation.**
- **A.rticle 12 of RFC - Representation not allowed.**
- *Each of the future spouses shall personally be present and consent to the marriage at the time and place of its celebration.*
- *Notwithstanding the provisions of Sub-Art. (1) of this Article, marriage by representation may be allowed by the **Ministry of Justice** where it has ascertained that there is a **serious cause** and the person who intended to do so has **fully consented thereto.***

- What does it mean by '**serious cause'?**
- We can attempt to identify what a serious cause is by looking into **the laws of other countries** and the **reason** for these countries to allow **marriage by proxy** as stated above.
- '**Serious cause'** in the Ethiopian Family Code will also be interpreted in light of these grounds.

CONT..

- *Compare article 12/1 cum article 25/1 of the RFC with article 586 of the Civil Code. Try to look into similar provisions of one or two regional family codes.*
- ***the obligation on the witnesses to declare, under oath, that the essential conditions for marriage are fulfilled – Article 25(2)***
- As mentioned earlier, one purpose of imposing these formality requirements is to make sure that the substantive requirements for conclusion of marriage are fulfilled.
- One way of achieving this purpose is by requesting the witnesses to confirm under oath the fulfillment of these conditions.
- ***The future spouses need to declare openly that they have consented to enter into the marriage. Art.25 (4)***
- Marriage is an institution which is to be entered into by the parties of their free will.

- The existence of their free will has to be openly communicated to the officer of civil status.
- ***Signature – Article 25 (5)***
- Apart from the open communication of their will, the future spouses as well as the witnesses are required to sign in the register of the Civil Status – Art. 25 (5)
- ***Pronouncement – Article 25 (6)***
- After the fulfillment of all the above mentioned formalities, what is left is for the Officer of civil status to pronounce them united in marriage and issue a certificate of marriage.

- **Religious Marriage**
- recognition by the RFC . ***Article 3 of the RFC***
- *“A religious marriage takes place when a man and a woman have performed such acts or rites as deemed to constitute a valid marriage by their religion or by the religion of one of them.”*
- The same provisions included under;
- Art.14 of the Amhara Family code, Art.13 of SNNPRS family code and Art.13 of Tigray Family code.

Cont..

- As a result, the formal requirements for the conclusion of religious marriage are dictated by **the religion itself**.
- **Article 26 (1)** - the conclusion of the religious marriage and the formalities thereon shall be as prescribed by the **religion concerned.**
- Article 26 (2) – the ***essential conditions*** that are stipulated by the RFC need to be observed

- ***Registration:***
- Art.28 (1) - Though the marriage is concluded in accordance with religious procedures and formalities, still it has to **be registered before the officer of civil status.**
- **Proclamation No. 760/2012 – Registration of vital events:**
- Article 31 – **obligation to declare marriage**
- *Where **marriage** is celebrated before an office of civil status, the officer of civil status who observed the marriage ceremony shall immediately register the marriage;*
- *Where marriage is celebrated by religious or customary ceremony, the couples **shall present to an officer of civil status, for registration,***
- **Other requirements and contents of registration are the same as Civil Marriage.**

- **Customary Marriage**
- The diversity in the customs of the people has been recognized by the 1995 FDRE Constitution.
- ***Article 34(4)*** *- in accordance with provisions to be specified by law, a law giving recognition to marriage concluded under systems of* ***religious*** *or* ***customary laws*** *may be enacted.*
- Particularly, **Article 34/4** of the Constitution stipulates for the enactment of a **specific law** which gives recognition to marriage concluded under systems of **religious or customary laws.**
- In light of this obligation, the RFC gives the future spouses the option to conclude their **marriage** in accordance with **customary** practices.

- *See also Art.14 of Tigray, Art.14 of SNNPRS, and Art.15 of Amhara Regional States Family code.*
- **Pursuant to Article 4:**
- for a marriage to be concluded **according to custom**, the custom referred ***to is of three***:
- The custom of the community in **which they live**, or
- the custom of the community to which both **future spouses belong or**
- **Alternatively,** to which only one of them belong.

Cont..

- the Civil Code undre *Article 580 of the Civil Code considers a marriage to be customary marriage when* ***it is concluded under the rules of the community to which***
  - ***the future spouses belong***
  - ***to which one of them belongs****.*
- The conclusion of the marriage as well as the **formalities**, hence, is to be prescribed by the **concerned community.**
- Customary marriages also need to observe the essential conditions of marriage stipulated by the RFC.
- ***What does celebration of marriage mean? When do we say a marriage is celebrated?***

Cont...

- **FSCCB; Vol.5, W/o Yeshareg Abatkun vs. W/o Meseret Admasu, case no.33875, p.262**
- The customary marriage was alleged to be made in Addis Ababa.
- In this case, the court held that the fact that the respondent and a deceased person who is claimed as husband of both parties have arranged a lunch program and thereby declared to their relatives and neighbors that they are husband and wife thereafter is sufficient to prove the existence of customary marriage.
- The spouses are free to make the marriage in a written form or orally declare to the community that they are husband and wife.
- In addition, to prove the existence of **customary marriage,** the spouses are required to show only **how it is made.**

Cont…

- **Article 97 - (2) Proof of Marriage by Possession of Status.**
- Where a person alleging the existence of marriage proves the possession of status of spouse in accordance with the preceding Article, the court may presume that marriage has been concluded.
- The presumption in Sub-Article (1) of this Article may be rebutted by producing any kind of reliable evidence.
- **Marriage Celebrated Abroad**
- RFC recognized marriages celebrated abroad for first time.
- This is necessitated by the increase in the **movement of people** from one place to another.
- Article 5 of **RFC** provides for the recognition of marriages which are celebrated abroad as valid in Ethiopia.

Cont.....

- **Here, two things are worth mentioning;**
- The marriage whose recognition is sought in Ethiopia has to be concluded by fulfilling the legal requirements of **the place of celebration.**
- Moreover, the law puts **public morality** of the Ethiopian people as a limitation on the recognition of marriages celebrated abroad.
- A good example here is the case of same-sex marriage.
- Article 629 of the new criminal Code made **sexual activity** and any indecent act with persons of the same sex a crime.
- ***Can we apply article 5 of the RFC to marriages concluded in the regions by way of analogy?***

- ***Art.16 of Amhara FC – Marriage Celebrated outside the region***
- Marriage celebrated outside the Region in accordance with the law of the place of celebration shall be valid so long as it fulfils those essential conditions of marriage prescribed under this law;
- ***Arti.15 of SNNPRS***; ***Marriage Celebrated outside the region***
- Marriage celebrated outside the Region in accordance with the law of the place of celebration shall be valid so long as it does not contravene public morality;
- Tigray Family Code is silent on the issue; it was adopted before the FRC which has introduced recognition of marriage concluded abroad.

Essential Conditions of Marriage

- Essential conditions for validity of marriage pertain to biological, psychological and sociological factors.
- The biological factors - ***age, sex and state of health*** of the future spouses,
- Psychological factor - ***relates to the freedom of will of the parties***.
- The sociological aspect - pertains to issues like marriage between persons related by **consanguinity and affinity as well as by adoption and it also incorporates bigamy.**
- The essential conditions that are found in the RFC are derived from the Civil Code, which in turn is derived from the Feteha Negest.

Consent

- Marriage is an institution which is to be entered into by the parties with their ***free and full consent.***
- The UN Convention on the UDHR, CEDAW, ICCPR, CRC, Protocol on African Women's Rights, as well as the Recommendation of the UN General Assembly , provide consent as a prerequisite for the conclusion of marriage.
- Ethiopia is one of the countries who have acceded to these Conventions. As a result, the **Constitution** as well as the RFC and the regional family codes incorporate consent as a validity requirement of marriage.

Cont…

- **Article 6 – Consent.**
- A valid marriage shall take place only when the spouses have given their free and full consent.
- See also Art.16 of SNNPRS, Art.15 of Tigray and Art.17 of Amhara Regions family codes.
- *So, there must be **no duress or force inducing the marriage** or any **misunderstanding** as to the effect of the marriage ceremony*.' Hence, the RFC recognizes some grounds which would vitiate the consent of the spouses.

- ***Fundamental Error – Art.13 of RFC***
- The first ground which is considered as a base for vitiating consent of the parties is error.
- ***the error has to be a fundamental one***. See art

Cont..

- ***Violence (Duress) – Art.14 of RFC***
- **Article 14 – Consent Extorted by Violence.**
- *Marriage concluded as a result of consent which is extorted by violence shall not be valid.*
- *Consent is deemed to be extorted by violence where it is given by a spouse to **protect himself** or one of his **ascendants or descendants,** or any other close relative from a **serious and imminent danger** or **threat of danger.***
- What must the **threat** or **fear** be of?
- The test for duress should **focus on the effect of the threat rather that the nature of the threat**.

Cont…

- In other words, the **threat** can be of any kind, but it must be shown that the **threats, pressure**, is such as to destroy the reality of the **consent.**
- It is suggested that as long as the beliefs of threats were honestly held, duress could be relied upon.
- By whom must the threat be made?
- **The thereat can emanate from a third party; it need not emanate from the spouse.**

Cont..

- ***Judicial Interdiction – Art.15 of RFC***
- Judicial interdiction exists in the cases where a person is **insane** according to article 339 of the Civil Code and where he has **been interdicted by the court**.
- **Art. 351 (1 & 2) of the civil code;**
- The order of interdictions means the interdicted person will have **lessened capacity** and hence need to **be protected.**
- **Art.15 (2) of RFC**;
- An interdicted person may conclude marriage only with the authorization of the court.

Cont..

- ***Age – Art.7 of RFC***
- In order to freely consent to the marriage, the parties should understand the **consequences** of their acts, and hence need to attain a **certain age.**
- The Convention on Consent to Marriage, Minimum age of Marriage and Registration of Marriage under the preamble, by making cross reference to the ***UDHR, as well as IICPR, CRC, African Women's Rights Protocol*** provides that it is only those men and women who attained **full age** who can enter into marriage.
- As can be seen from the Recommendation on Consent to Marriage, Minimum Age for Marriage and Registration of Marriages, General Assembly resolution 2018 (XX), principle II;
- Member States shall take legislative action to specify a minimum age for marriage, which in any case shall ***not be less than fifteen years of age***.

Cont..

- There are different reasons which can be raised as a ground for limiting the minimum marriageable age of spouses.
- *'The claim that "[m]arriage involving teenagers are more unstable than other marriages and are more likely to end in divorce than other marriages."'*
- RFC, the minimum marriageable age is 18 years for both sexes. Hence, any person **who has not attained** the full age of 18 years may not conclude a valid marriage.
- However, there are circumstances in which a **valid marriage** could be concluded without the fulfillment of this requirement. This is provided as an exception under sub article two.

Cont..

- If the Minister of Justice, for serious cause, grants for dispensation, on application of the future spouses, or the parents or guardian of one of them, marriage could be validly concluded.
- The dispensation, however, may not be **more than two years.**
- This exception provided under the RFC is in line with the power given to states by the Convention as well as the Recommendation which recognize the power of the appropriate authority to grant dispensation for serious reason in the interest of the future spouses.
- The very basic question here is as to how the serious cause can be identified.

- ***Relationship***
- The other essential condition for the conclusion of marriage is relationship, or rather the existence of prohibited degrees.
  - **consanguinity restrictions**
- involve marriage between persons related in the direct line between ascendants and descendants. Hence, marriage between parent and child, grandparent and grandchild is prohibited.
    - **collateral line,**
- prohibits marriage between a man and his sister or aunt and also a woman and her brother or uncle.
- What is the reason for the prohibition?

- **Bigamy**

- **absence of prior marriage is other** essential condition for the conclusion of a valid marriage .
- On the issue of bigamy Herring has the following to say in relation to the English law
- *Many cultures do permit polygamous marriages, although in British society monogamous marriages are the accepted norm.*
- *There are concrete objections to polygamous marriages.*
- *Some argue that polygamy may create divisions within the family, , between the children of different parents.*
- *Supporters of polygamous marriage argue that polygamy lead to less* ***divorce and provide a wider family support network*** *in which to raise children.*

- These arguments in **favor and against** polygamous marriages were also reflected at the time of debating on the draft RFC.
- Ethiopia is a multi religious and multi cultural country. Some consider condemnation of polygamous marriage against their culture and religious beliefs.
- Some followers of Islam religion were arguing that it would be against the right that they obtain by virtue of their religion, and hence polygamous marriages should not be prohibited.
- On the other hand, **female right advocates** were arguing that it is against the Constitutional right of female .
- the law opted for the first view. Hence, for a person to conclude a valid marriage there should not be a preceding marriage.

Cont..

- **2.6 Effects of Violation of Essential Conditions of Marriage**
- The law has provided for certain conditions which need to be fulfilled for the conclusion of a valid marriage.
- It also provides the chance for certain group of persons to oppose and therefore prevent the conclusion of marriage which does not fulfill the necessary conditions.
- However, what would happen to a marriage which was celebrated when one of the conditions is absent?
- Before looking into the consequences of violation of each and every conditions, we have to first identify the difference between **void and voidable** marriages and if such a distinction exists under Ethiopian law.

- ***A void act is an empty act.***
- *It does not achieve its intended legal consequences.*
- *An act is void due to a **defect therein** which is so **fundamental** as to **deprive the act of its very existence**.*
- *‘A defect may make a **juristic act** either **void** or **voidable**.*
- ***it has no legal effect**, but this is not strictly so as the act may have **effects unforeseen by the actor**, such as those of criminal **prosecution**, because of **the illegality of the act**.*
- *The point about the **void act** is that it achieves **no part of its intended legal consequences** and in so far as these are concerned it **has no effect and can be ignored.***

Cont..

- ***A voidable act*** *is an act which, although it contains a defect, has its intended legal effect. The defect in the* ***voidable act is not so serious as to*** *prevent it from* ***coming into effect.***
- *"An act that is* ***incapable of taking effect*** *according to its apparent* ***purport is said to be void****. One which may* ***take effect*** *but is liable to be* ***deprived of effect*** *at the* ***option*** *of some or one of the parties is said to be voidable."*
- *The defect contained in the voidable act* ***is sufficiently serious to enable the act to be subsequently attacked by one of the parties*** *and declared void by the courts. If, however, it is not avoided the act will take effect as a* ***valid juristic act****. One learned writer has suggested that the correct way to view the voidable act is as "an act which gives rise to the* ***intend-ed legal*** *consequences, but at the same time gives rise to a* ***counteractive right*** *which may* ***neutralize those consequences*** *in so far as one of the parties is* ***concerned."***

Cont..

- ***A void marriage**: is one to which there is such a serious objection in law because of a grave defect.*
- *it will be regarded as never having taken place and can be so treated by all affected or interested parties.*
- *the parties as never having been married.*
- *Any person having an interest therein could petition for a declaration of non existence of the marriage at any time, even after the death of the parties.*
- *Since the parties never had the status of husband and wife none of the normal consequences of marriage would follow. ……*

Cont..

voidable marriage

- *is quite different from a void marriage.*
- *The marriage will be regarded as a valid marriage unless and until it is attacked.*
- *As to the **effects of a voidable marriage**, a distinction must be drawn between*

*1. a **marriage which, although voidable**, is **never attacked** and therefore **never avoided.***

In this case the marriage will be valid and all the normal legal consequences of marriage will follow.

*2. **a marriage which is avoided**.*

*In this case, a further distinction must be made between those marriages which are given effect up to the day of avoidance. It is here that the use of the word "**voidable"** may be criticized. It fails to distinguish between the act which is not **void ab initio** but is declared **void retroactively by a court**, and the act which is **deprived of all future effect** by the court but which retains such effect as it has had up to **avoidance.***

Cont..

- *Three categories then emerge.*
- *The marriage which is **void ab initio**, that is which never came into being or had any effect;*
- *the marriage which is void retroactively, (ex tunc), that is which came into being, would have been valid had it not been found out, but is not deprived of all effect:*
- *the marriage which is void ex nunc, that is which is deprived of effect for the future but which holds good for the past. The only category into which the Ethiopian marriage law clearly falls is that of **void ex nunc.***
- *What is the difference between **void and voidable marriage**? Does this distinction exist in the RFC? What about the regional family codes?*

- Our law recognizes only **voidable marriages**. A marriage which has been concluded when one or more of the **essential conditions** are lacking will be invalidated.
- That is to say, from the date of **invalidation**, the marriage **will cease to exist**, and the **consequences of dissolution of marriage.** However, we should keep in mind that this assertion does not work for all conditions. For instance, in the case of violation of **period of widowhood**, the marriage will not be invalidated. Article 37 of RFC will follow. However, for the time being that the marriage was intact, it will be considered as a valid marriage.

Cont..

- The other very important thing that needs to be noted here is the change made by the RFC in respect of provisions dealing with punishment for violation of essential conditions.
- **The Civil code, apart from providing for the civil consequences of violating essential conditions, also makes reference to the Penal Code for criminal punishment. However, the civil code did not show the exact punishments accompanying. As a result maintaining these provisions was not necessary. The RFC provide only the civil consequences and if one wants to know the criminal consequences, reference has to be made to the Criminal code.**

Cont..

- the civil as well as criminal consequences of violating each essential condition.
- **As far as the consequence of violation of essential conditions is** concerned, we may classify the conditions into three categories.

1. **The first one is the impediment to the celebration** of the marriage which does not affect its **subsequent validity**, its purpose being only **prohibitory.**

   Example**: period of widowhood**. b/c purpose of this condition is **to avoid conflict of paternity** and to ensure the right of **children to know their parents**. If, however, marriage is concluded without the lapse of the **180 days** stipulated by the law, **the marriage will not be dissolved.**

- **Article 37 of RFC**

- Civil marriages are to be concluded before an officer of civil status, who is competent enough to celebrate marriages, and by fulfilling certain formalities.
- However, the fact that the officer does not have competence to celebrate marriage will not be a ground to dissolve the marriage.
- Moreover, article 25/3 requires the officer to tell the future spouses and the witnesses the consequence of their declaration before taking an oath.
- The failure of the officer to inform this fact to the future spouses and the witnesses will not be a **ground to dissolve the marriage**.

- Another formality related to celebration of marriage, as incorporated under article 25/6 is, the requirement on the part of the officer to pronounce the parties united in marriage .
- fulfilled all the requirements and issue certificate of marriage. The failure to fulfill this requirement is also not **considered as a ground for dissolution of marriage**.

Cont..

- 2. those which will prevent the marriage from taking place and make the marriage voidable if it takes place, but for reasons occurring after the marriage, the impediments cease to exist and the **marriage becomes valid.**
- 'The distinguishing aspect of this group is that the marriage, although **voidable after celebration** and thus **open to dissolution**, can be **subsequently validated.** This means that the marriage which is voidable after its celebration due to a defect therein can subsequently become **valid through the *ex facto*** removal of the impediment or by **the passage of time.** This process is known as **validation'**
- Those marriages which **are voidable,** but may be validated include **underage marriages, bigamous marriages**, **marriages concluded by judicially interdicted persons**, marriages concluded under the **influence of violence,** marriages concluded in the existence of **fundamental error.**
- Article 39RFC

Cont..

- **Underage marriages**: - Article 31
- the dissolution of the marriage may not be sought once the spouses have **attained the minimum marriageable age.** Hence, even if the marriage is **voidable for non fulfillment** of the required age, it may latter be validated as a result of **attaining the required age.**
- The Criminal Code, on the other hand, attached criminal sanction on this **voidable** but **validable marriage**.
- A person who concluded marriage with an underage, knowing that she has not attained the minimum marriageable age stipulated under the family law, will be subject to **rigorous imprisonment** for not more than three years. This is so if the victim is 13 years and above. Article 31/2 RFC

- However, if the victim is below 13 years, the punishment will be a rigorous imprisonment not more **than seven years.**
- **Bigamous Marriages:** Article 33 of RFC
- also falls into the category of marriages which are voidable but validatable.
- The application for dissolution may be made only as long as the former spouse of the **bigamous marriage is alive**. If however, the former wife dies, it can be **validated.**

Cont..

- **Article 650 of the Criminal Code**, on the other hand, stipulates the **criminal consequence** of concluding a bigamous marriage.
- The party who concluded a bigamous marriage will be sentenced to a **simple imprisonment,** but if he/she concluded the second marriage by **concealing the truth** and **deceiving** the new spouse, the punishment will be **five years** rigorous imprisonment.
- On the other hand, if the new spouse was aware of the previous marriage of the bigamous spouse, he/she will be sentenced to simple **imprisonment**.
- **bigamy is not always a punishable act**. Bigamous marriages may be allowed in **some religions and cultures**. If the family law of a certain region allows the conclusion of a bigamous marriage, there is no reason for the criminal code to penalize those who concluded a **bigamous marriage.**

Cont..

Defective Consent: -

- Articles 36 of the RFC deal with the fate a marriage which has been concluded in the absence of the consent the parties.
- Whatever **ground causes** the defective consent, the marriage concluded in such manner will be dissolved.
- However, there is a difference in the time limit within which the application for dissolution may be made to the court.

Cont..

- judicially interdicted person, **Article 34**
- it is the judicially interdicted person and the guardian who are given the right to request the **dissolution of the marriage**.
- The JIP **may not apply for dissolution** six moths after the date of termination of his/her disability.
- **the guardian**, the application has to be made **within six month** after the day on which the guardian becomes **aware of the existence of marriage,** and in any case after the disability has ceased.
- Here we are dealing with two types of limitations.
- The first one is a **relative limitation** in that it **depends on** when the guardian **becomes aware of the existence** of the marriage.
- The second is an **absolute limitation.** In all the circumstance, unless an application is made within the specified time the marriage will be validated.

Cont...

- When the consent is **vitiated** as a result of an act of **violence,** the party who concluded the marriage under the influence may apply to the **dissolution of marriage.** Article 35and 36 RFC
- the party seeking for the dissolution of the marriage has to make application at the time when the **violence is still intact or alternatively within six months after the cessation** of the violence.
- There is also a **two year absolute limitation** which will be counted **beginning from the date of conclusion of marriage**. Once these time limitations have passed, **the marriage becomes a valid one.**
- **where the consent was vitiated by error,** whosoever has **concluded marriage** due to **fundamental error** may apply for the **dissolution of the marriage**.
- The application has to be made **within six months** after the discovery of the **error**. Otherwise, the marriage will be valid. It also **has a two year absolute period of limitation.**

- there is also a criminal sanction attached.
- The party who has **concealed the existence** of one or more conditions which will cause the **dissolution of marriage** will be punished by simple imprisonment not exceeding two years and a fine not exceeding five thousand birr.
- it is not **only those persons** who concluded the **voidable marriage who** will be **liable to criminal punishment**. Rather the law also includes those persons who **celebrated such marriages.**
- 3. **The third category of impediments is absolute impediments.**
- **relationship by consanguinity and affinity**.
- That means it may be **dissolved at any time**.
- Article **646, 647** of the **Criminal code**.
- The code further classifies those persons who celebrated such marriages with **intention and negligently.** Obviously the difference lies on the accompanying punishment.

- **Period of Widowhood – Art.16 of FRC**
- woman is under **prohibition to remarry** within the next one **hundred and eighty days** following the dissolution of her former marriage.
- This condition was also included in the Civil Code of 1960 and was subject to criticisms from different parties, particularly from female right advocates.
- limiting the right **of female to conclude** marriage at any time **she wants**, mainly because the limitation does not apply for males.
- However, when one looks into the rationale for this restriction, it will be clear that the limitation is not designed to **discriminate between the two sexes**

- The rationale for the limitation under article 16 is
- 1. to respect the right **of children enshrined in the Constitution (international human right instruments) 2. to avoid the issue of paternity.**
- Article 36/1/c of the 1995 FDRE Constitution provides that each child has the right to know and be cared for by his/her parent or legal guardian. This principle is also enshrined under articles 5, 8 and 9 of CRC to which Ethiopia is a party.
- In addition to this right, article 128 of the RFC provides a presumption as to the duration of pregnancy.
- In order to respect the right of children and also to comply with the presumption, it is necessary to avoid any circumstances which would create a doubt as to who the father of that child is.

- Hence, by requiring the female to wait for a period of 180 days following the dissolution of a previous marriage, the law tries to avoid any conflict of paternity.
- The article also provides for some exceptional circumstances in which the 180 days restriction need not be observed.
- 2. The provisions of Sub-Article (I) of this Article shall not apply where:
    - the woman gives birth to a child after the dissolution of her marriage;
    - the woman remarries her former husband;
    - it is proved by medical evidence that the woman is not pregnant;
    - The court dispenses the woman from observing the period of widowhood.
- Mehari Redae - For example, if the women is infertile/can't give birth to a child or if the women has seen menstruation for consecutive months (according to Muslim), if it is proved that the women has never consummated during marriage.

- **Opposition to Marriage – Arts.17ff**
- As discussed earlier, marriage is an institution to be entered into with the full and free consent of the parties. This assertion suggests that it is primarily the parties themselves who will have a say on whether they should be joined by matrimony or not.
- The society and the state also have interest in the marriage of the two individuals. The society and the state regulate and provide protection for the institution of marriage.
- The law, by way of regulating the relationship, has provided certain conditions which are essential for the validity of a marriage. The society as well as the executive organ of the government, on the other hand, has the obligation to oversee the observance of these essential conditions prior to the conclusion of the marriage.
- In the following section the discussion will focus on as to
- Who may bring an opposition for the conclusion of marriage,
- To whom this opposition may be made,
- When this opposition should be made, and
- The form of the opposition.

- **Who may oppose – Art.18**
- Depending on the essential condition which is violated, the persons who may oppose to the conclusion of the marriage differ.
- ***When the condition violated is age***,
- There are potentially three groups of persons who are given the right to oppose;
- Art.18 (a) - The first one is the parents of the minor.
- If one of the future spouses have not attained the minimum marriageable age stipulated by the law i.e. 18 years, then the parents of that minor may oppose to the marriage.
- In many instances underage marriages are arranged by the parents of the minor themselves. In such situations obviously other persons should be given the right to oppose for the marriage.
- This is where the public prosecutor comes into picture; underage marriage is considered as a criminal act.
- The law gives ‘any other interested person’ a right to oppose the underage marriage.

- *Who this ‘any interested person’ can be. Does it refer to any passerby or it has qualifications?*
- In civil suits persons who may be plaintiffs are qualified under article 33/2 of the Civil Procedure Code. **This article requires a person to have a vested interest in the subject matter of the suit,** to be qualified as a plaintiff.
- That is to say, the outcome of the suit has to affect the person either positively or negatively so that he can be the real party in the suit. Article 18/a of the RFC should also be construed in this manner even if we are not talking about court proceedings.
- As a result, when the law refers to ‘any other interested person’ it refers to those parties who may be directly or indirectly affected by the conclusion of the underage marriage.
- Under this group are included ***those NGOs which are working on the prevention of underage marriages***.
-

- Art.18 (b) When the essential condition violated is relationship by consanguinity or affinity;

- The right to oppose the marriage is given to:
- The ascendants of both or one of the future spouses
- Their brothers and sisters who have attained the full age of 18 years.
- The public prosecutor, as the organ having the obligation to safeguard the interest of the society and the state, is given the right to oppose this marriage.
  - Art.18 (c) - In cases of bigamous marriages,
- There are two persons who may oppose;
- the previous wife or husband of the bigamous spouse.
- the public prosecutor
  - Art.18 (d) - In the case of judicial interdiction;
- it is the guardian of the interdicted person and
- the public prosecutor (common in all)

Cont...

- **To whom should opposition be made?' – Art.19**
- The Amharic version of this article provides that opposition is to be made to the marriage celebrating officer while the English version limits it to the officer of civil status.
- □□□□.19 - □□□□□ □□□□□□□□ □□□□□ □□
- □□□ □□□□□□□ □□□□□□ □□□□□ □□□□ □□ □□□ □□□□ □□□□ □□□□□□□ □15 □□ □□□ □□□□ □□□□□□ □□□□□□ □□□□ □□□□□
- **See also the raison dete're Art.19**
- Accordingly, opposition is to be made to the organ which has the power to celebrate the marriage.
- **Form and time of opposition – Art.19 (1)**
- In order to show the seriousness of the case, the opposition is required to be made in a written form.
- Hence, there is no oral opposition to marriage.

Cont..

- There is also a time limit attached.
- The opposition has to be made 15 days before the celebration of marriage.
- In civil marriages, there may not be that much of a problem in the time limit at least as far as the law is concerned. Article 23 of the RFC requires the future spouses to notify the officer of civil status of their intention to conclude marriage, a month before its celebration, and the latter has the obligation to publicize the same.
- The idea here is everyone will have access to the notification publicized by the officer of civil status and hence within two weeks those interested persons will make opposition.
- (However, when it comes to the other modes of conclusion of marriage, this kind of stipulation is not provided, making observance of article 19 somehow impractical. The law provided the maximum time within which the opposition has to be made. This limitation takes into account various societal values and the burden on the future spouses. Hence, the observance has to be strictly followed.

- **Decision and Appeal from the decision on opposition** – Art.20 and 21
- The person to whom opposition is made has to make its decision within five days.
- If the celebrating officer rejects the opposition and decides to continue the celebration of the marriage, the decision will be final one.
- However, if the decision is to accept the opposition and suspended the celebration of the marriage, the future spouses or one of them may appeal to the court against the decision. This article shows the weight given to the right of the future spouses to form family.