CHAPTER 3: MEMORY

1

Computer Architecture and Organization

COMPUTER MEMORY SYSTEM OVERVIEW

- Different kinds, based on technology, organization, performance, and cost
- No single technology is optimal

Key Characteristics of Memory Systems

- **Location**:- refers to whether memory is internal or external to the computer.
  - Internal (e.g., processor registers, cache, main memory)
  - External (e.g., optical disks, magnetic disks, tapes)
- **Capacity:-** the capacity of the memory
  - For Internal in terms of words (Common lengths are 8, 16, & 32 bits)
  - For External in terms of bytes

CONT…

- **Unit of transfer**:
  - For internal memory, the number of electrical lines into and out of the memory module. Word length =< (such as 64, 128, or 256 bits.)
  - **Word:** The “natural” unit of organization of memory
  - **Addressable units:** is a word or at the byte level. $2^A = N$.
  - **Unit of transfer:** For main memory, this is the number of bits read out of or written into memory at a time.
    - Need not equal a word or an addressable unit.

CONT…

Access Mode: the method of accessing units of data

- **Sequential access:** Access must be made in a specific linear sequence.
  - A shared read–write mechanism is used.
  - The time to access an arbitrary record is highly variable.
  - Sequential access devices are usually a form of magnetic storage or optical storage.
  - E.g.. Magnetic Tape
- **Direct access:**
  - A shared read–write mechanism is also used.
  - However, individual blocks or records have a unique address based on physical location.
  - Access is accomplished by direct access to reach a general vicinity plus sequential searching, counting, or waiting to reach the final location.
  - Access time is variable. E.g. Magnetic Disk

CONT…

- **Random access:**
  - Each addressable location in memory has a unique, physically wired-in addressing mechanism.
  - Access time is independent of the sequence of prior accesses and is constant.
  - Any location can be selected at random and directly addressed and accessed.
  - E.g.. Main memory & some cache systems
- **Associative:**
  - Random access type of memory.
  - However, stored data can be identified for access by the content of the data itself rather than by an address or memory location.
  - Write operation:- The memory itself is capable of finding an empty unused location to store the word.
  - Read operation:- the content of the word, or part of the word, is specified. The words which match the specified content are located by the memory by comparing it with all words simultaneously.
  - Access time is constant independent of location or prior access pattern. E.g. cache memory

CONT…

Performance

- **Access time (latency):**
  - For random-access memory: the time it takes to perform a read or write operation
  - For non- random- access memory: the time it takes to position the read–write mechanism at the desired location.
- **Memory cycle time:**
  - This concept is primarily applied to random-access memory
  - Access time plus any additional time required before a second access can commence.
  - Note that memory cycle time is concerned with the system bus, not the processor.
- **Transfer rate:** This is the rate at which data can be transferred into or out of a memory unit.
  - For random-access memory, it is equal to 1/(cycle time). For non-random-access memory

CONT…

Performance:

- **Transfer rate:** This is the rate at which data can be transferred into or out of a memory unit.
  - For random-access memory, it is equal to 1/(cycle time).
  - For non-random-access memory

$$T_n = T_A + \frac{n}{R}$$

  - where T_n = Average time to read or write n bits, T_A = Average access time, n = Number of bits, R = Transfer rate, in bits per second (bps)

Physical types:

- Semiconductor memory, magnetic surface memory, and optical and magneto-optical.

Physical characteristics: Volatile vs Non-volatile memory

Organization: refers to the physical arrangement of bits to form words.

Table 4.1 Key Characteristics of Computer Memory Systems

Location
- Internal (e.g., processor registers, cache, main memory)
- External (e.g., optical disks, magnetic disks, tapes)

Capacity
- Number of words
- Number of bytes

Unit of Transfer
- Word
- Block

Access Method
- Sequential
- Direct
- Random
- Associative

Performance
- Access time
- Cycle time
- Transfer rate

Physical Type
- Semiconductor
- Magnetic
- Optical
- Magneto-optical

Physical Characteristics
- Volatile/nonvolatile
- Erasable/nonerasable

Organization
- Memory modules

THE MEMORY HIERARCHY

- Design constraints
  - How much ? (capacity)
  - How fast? (access time)
  - How expensive? (cost)
- Faster access time, greater cost per bit;
- Greater capacity, smaller cost per bit;
- Greater capacity, slower access time.

- The way out of this dilemma is not to rely on a single memory component or technology, but to employ a **memory hierarchy**.

- Decreasing cost per bit
- Increasing capacity;
- Increasing access time;
- Decreasing frequency of access of the memory by the processor.

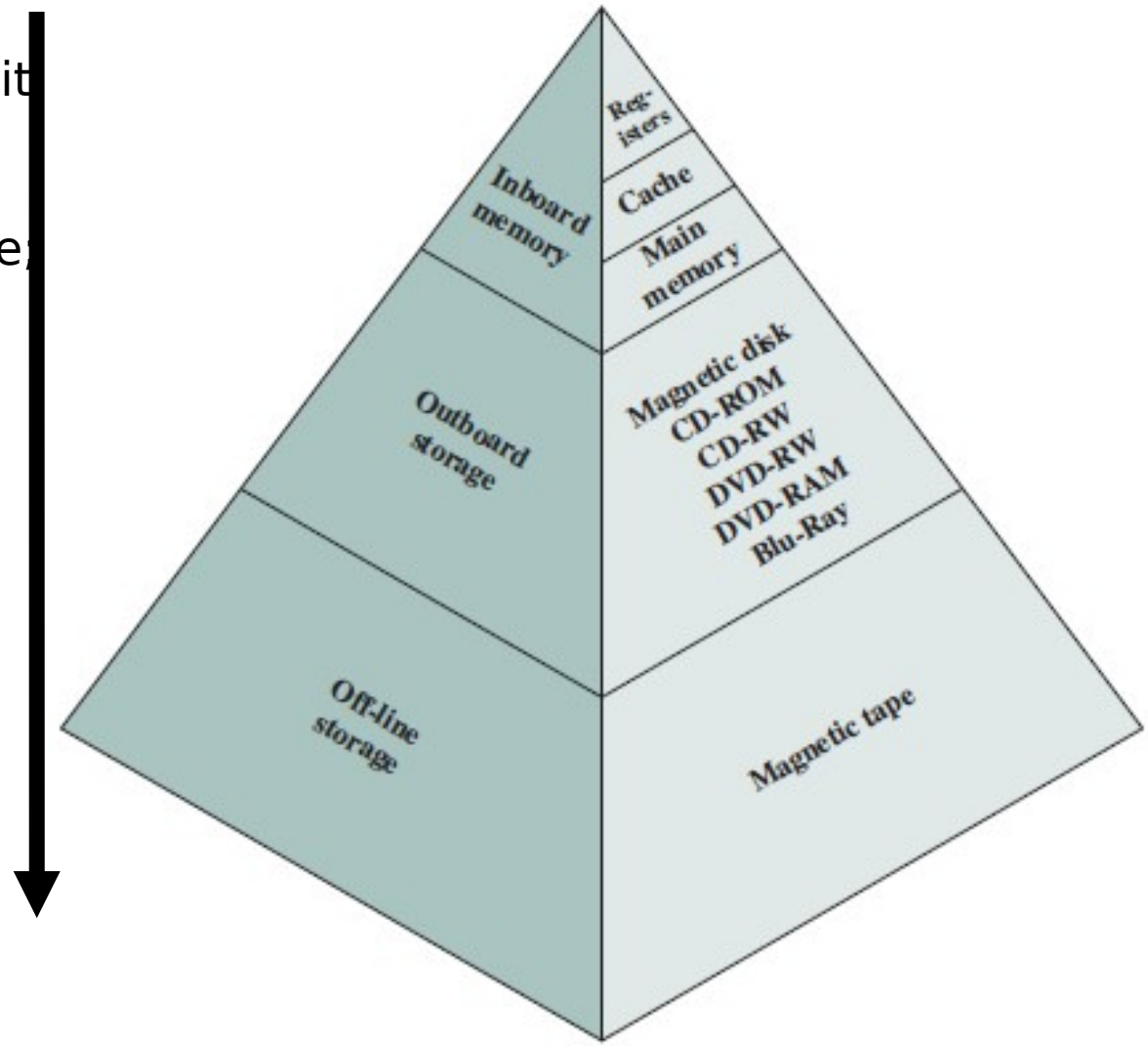

Figure 4.1 The Memory Hierarchy

LOCALITY OF REFERENCE

- Refers to a phenomenon in which a computer program tends to access same set of memory locations for a particular time period.
- In other words, **Locality of Reference** refers to the tendency of the computer program to access instructions whose addresses are near one another.
- This property is mainly shown by loops and subroutine calls in a program.

CACHE MEMORY

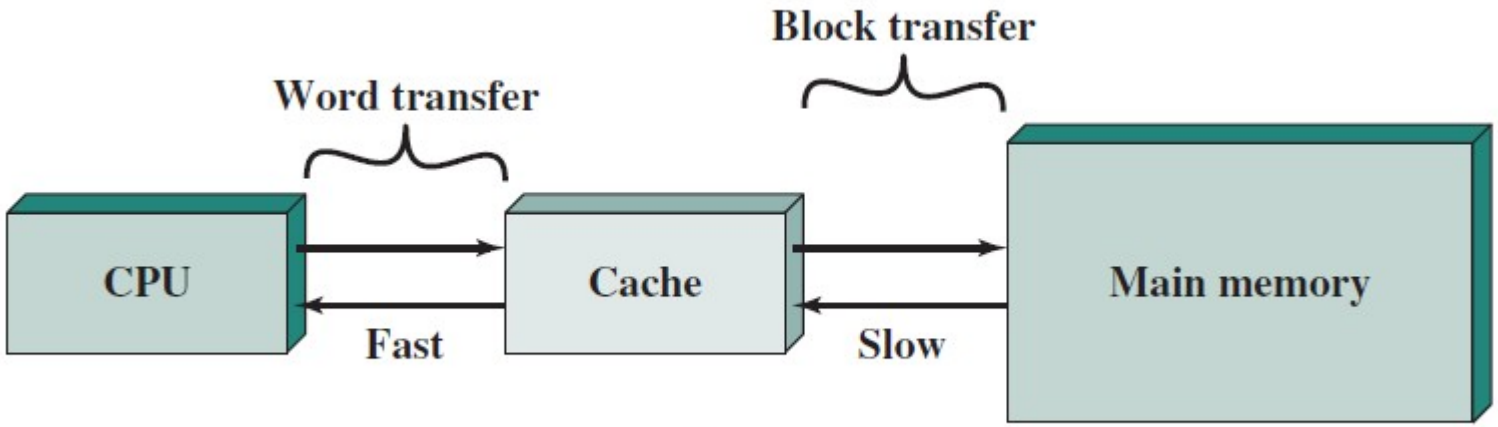

(a) Single cache

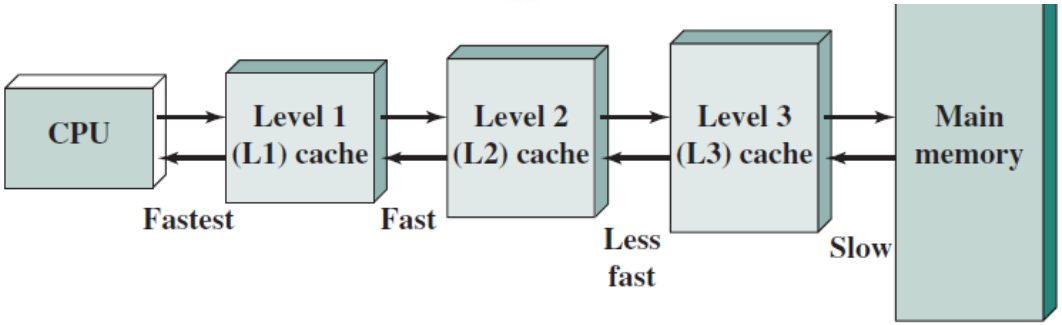

(b) Three-level cache organization

Figure 4.3 Cache and Main Memory

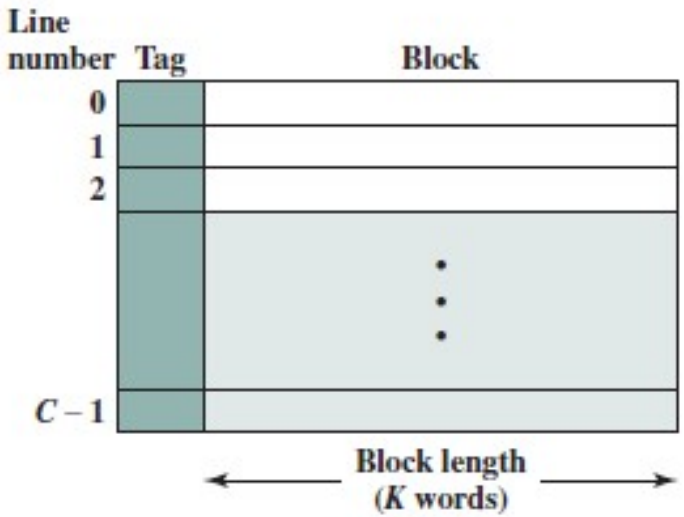

(a) Cache

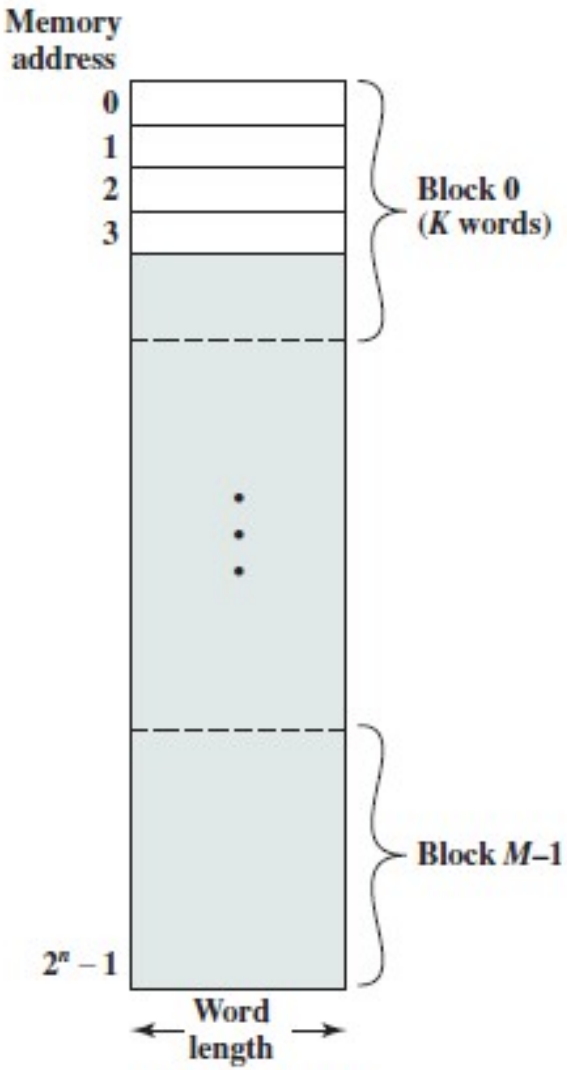

(b) Main memory

- 2^n addressable words
- $M = 2^n/K$ blocks in main memory
- cache consists of m blocks, called **lines**
- Each line contains K words plus a tag of a few control bits
- ($m << M$)
- **tag** identifies which particular block
- tag is usually a portion of the main memory address

Figure 4.4 Cache/Main Memory Structure

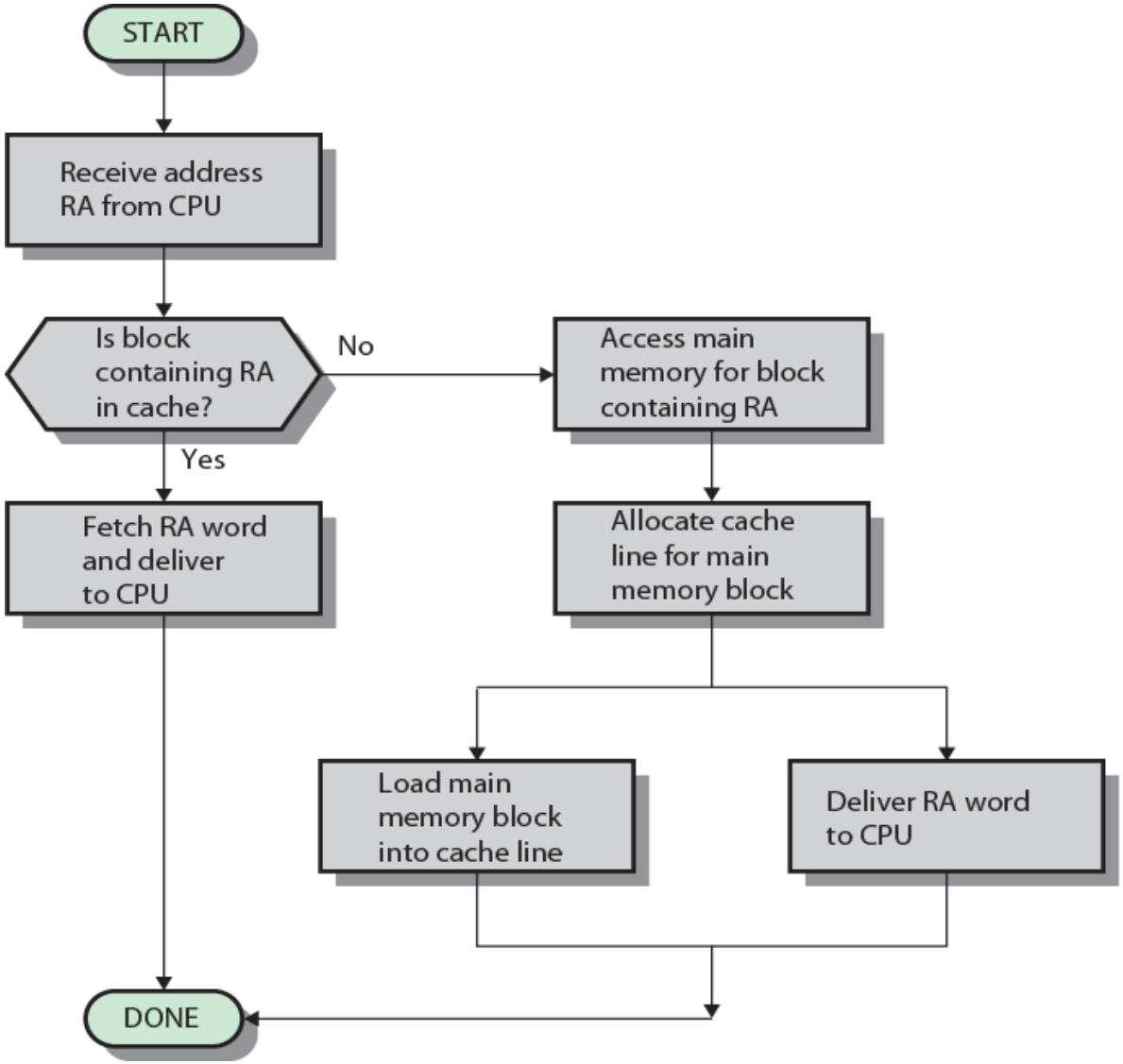
START
Receive address RA from CPU
Is block containing RA in cache?
No
Yes
Access main memory for block containing RA
Fetch RA word and deliver to CPU
Allocate cache line for main memory block
Load main memory block into cache line
Deliver RA word to CPU
DONE

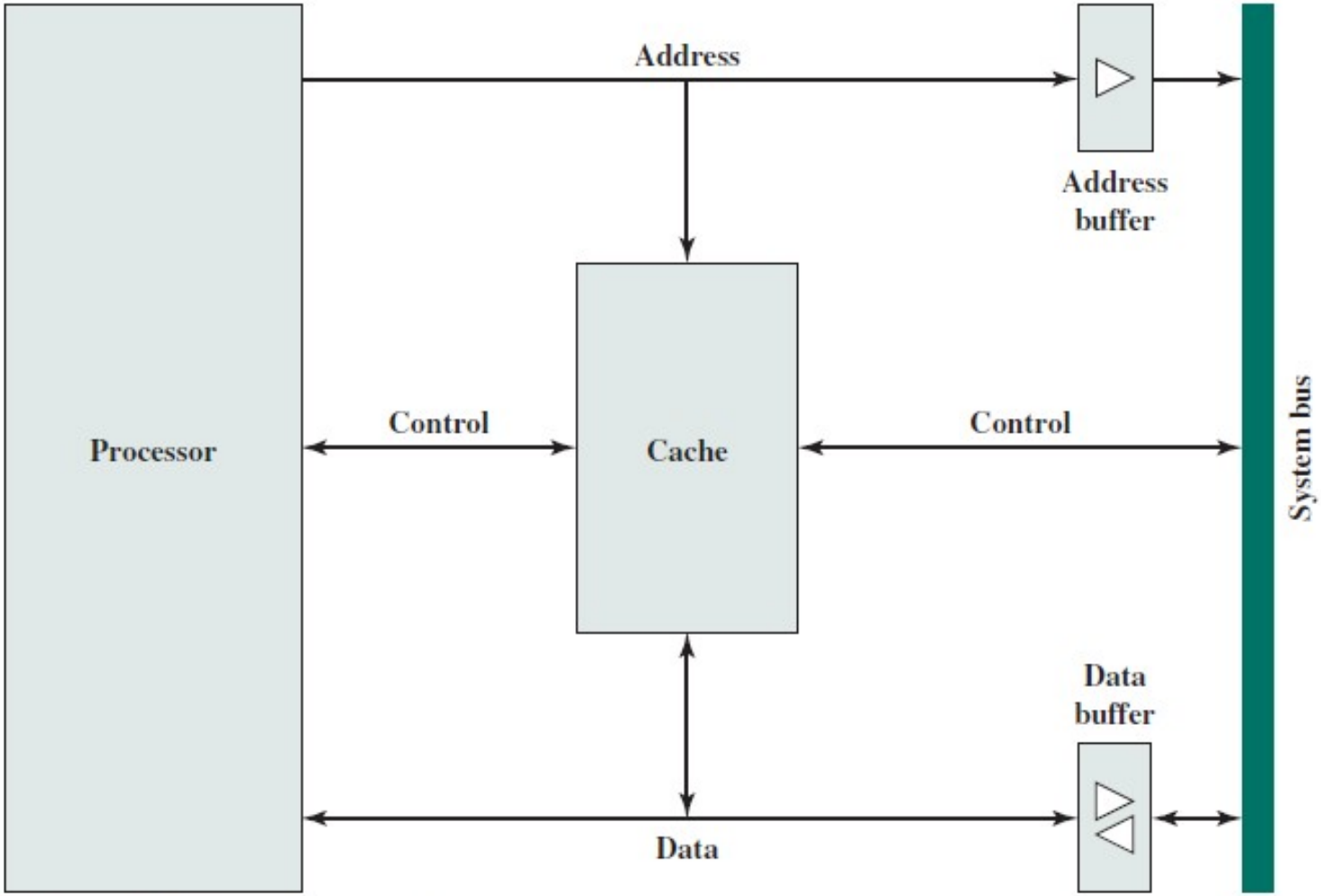

Figure 4.6 Typical Cache Organization

ELEMENTS OF CACHE DESIGN

Table 4.2 Elements of Cache Design

Cache Addresses	**Write Policy**
Logical	Write through
Physical	Write back
Cache Size	**Line Size**
Mapping Function	**Number of Caches**
Direct	Single or two level
Associative	Unified or split
Set associative	
Replacement Algorithm	
Least recently used (LRU)	
First in first out (FIFO)	
Least frequently used (LFU)	
Random	

CACHE ADDRESSES

- Virtual memory is a facility that allows programs to address memory from a logical point of view, without regard to the amount of main memory physically available.
- A **logical cache (virtual cache)**, stores data using **virtual addresses**.
- A **physical cache** stores data using main memory **physical addresses**.

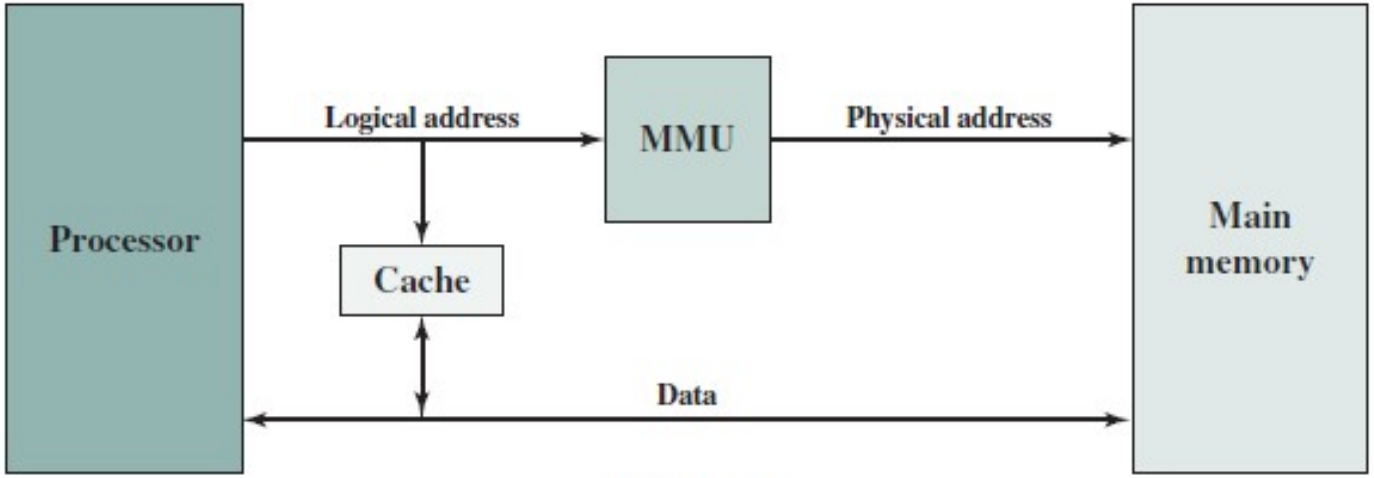

(a) Logical cache

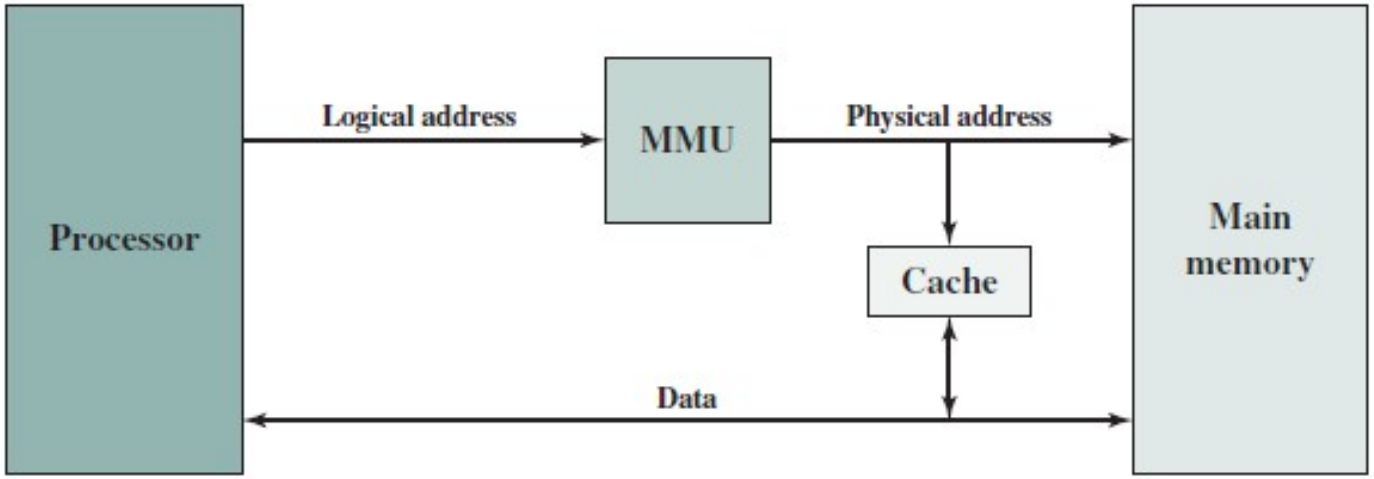

(b) Physical cache

Figure 4.7 Logical and Physical Caches

CACHE SIZE

- Too small:- too many cache misses
- Too large:- expensive and involves large number of gates… slightly slow
- Because the performance of the cache is very sensitive to the nature of the workload, it is impossible to arrive at a single “optimum” cache size.

MAPPING FUNCTION

- Is an algorithm that maps main memory blocks into cache lines.
  - m << M
- Further, it tells us which main memory block currently occupies a cache line.
- The choice of the mapping function dictates how the cache is organized.
- Three techniques can be used:
  - Direct,
  - Associative, and
  - Set-associative.

DIRECT MAPPING

- The simplest technique
- Maps each block of main memory into only one possible cache line. The mapping is expressed as

$$i = j \text{ modulo } m$$

- i = cache line number,
- j = main memory block number
- m = number of lines in the cache

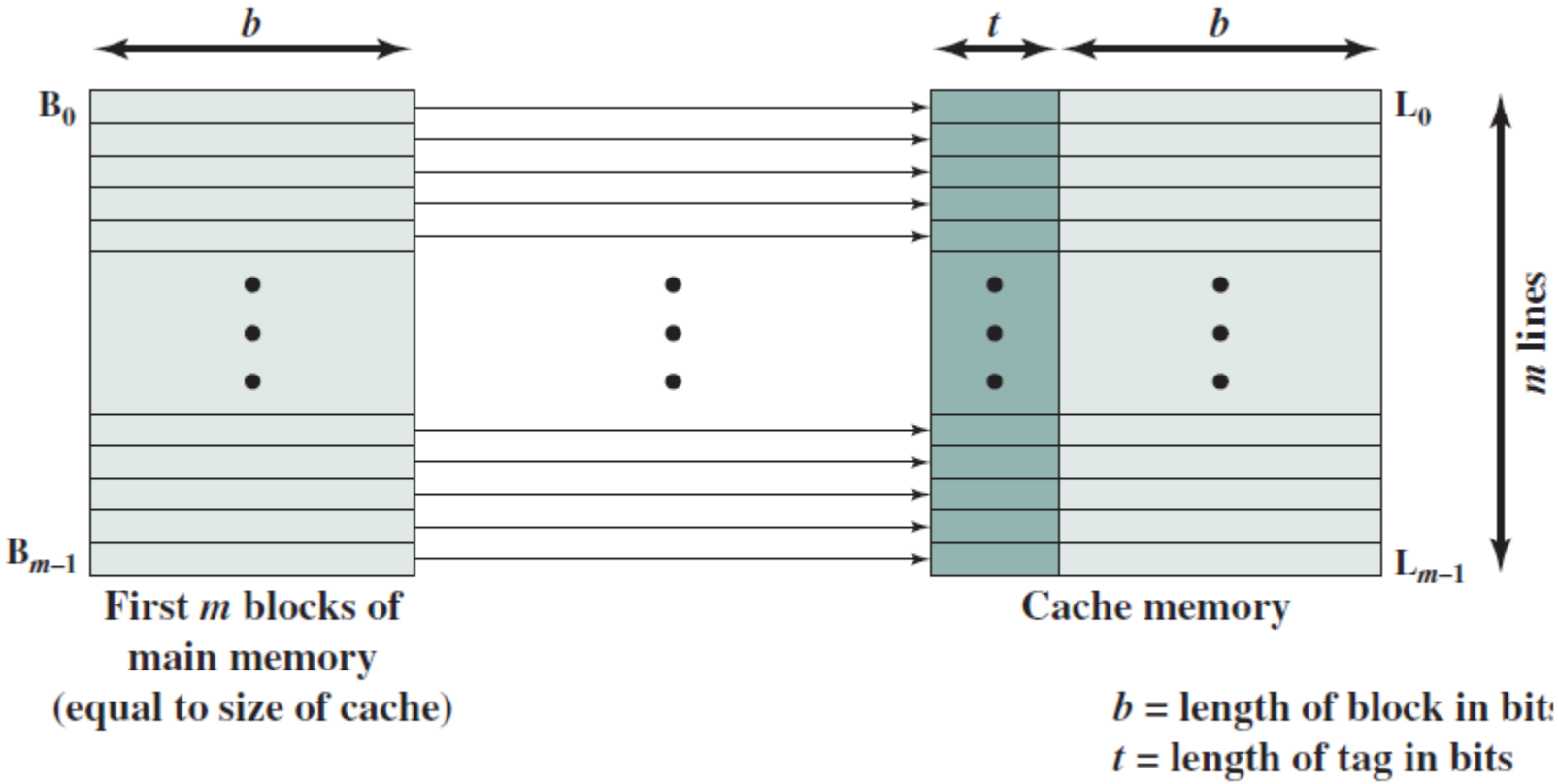

(a) Direct mapping

CONT…

- For purposes of cache access, each main memory address can be viewed as consisting of three fields.

t bits	r bits	w bits
Tag	Line	Word

- The least significant *w* bits identify a unique word or byte within a block of main memory;
- The remaining *s* bits specify one of the 2^s blocks of main memory.
- The cache logic interprets these *s* bits as a tag of *s* - *r* bits (most significant portion) and a line field of *r* bits.
- This line field identifies one of the $m = 2^r$ lines of the cache.

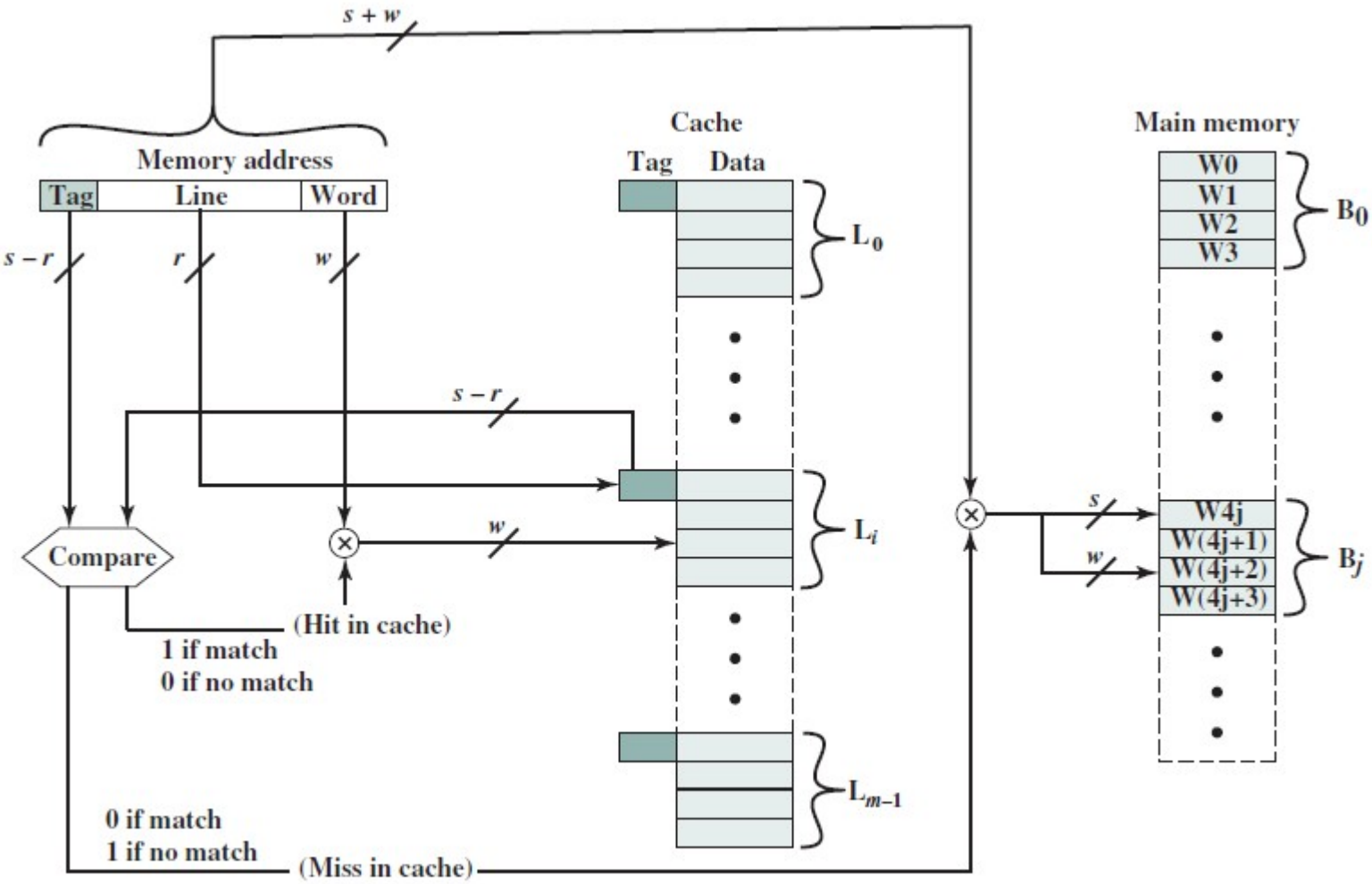

Figure 4.9 Direct-Mapping Cache Organization

TO SUMMARIZE,

- Address length = $(s + w)$ bits
- Number of addressable units = 2^{s+w} words or bytes
- Block size = line size = 2^{w} words or bytes
- Number of blocks in main memory = = 2^{s}
- Number of lines in cache = $m = 2^{r}$
- Size of cache = 2^{r+w} words or bytes
- Size of tag = $(s - r)$ bits

CONT…

- The direct mapping technique is simple and inexpensive to implement.
- Its main disadvantage is that there is a fixed cache location for any given block.
- Thus, if a program happens to reference words repeatedly from two different blocks that map into the same line,
  - then the blocks will be continually swapped in the cache, and the hit ratio will be low

ASSOCIATIVE MAPPING

- Overcomes the disadvantage of direct mapping by permitting each main memory block to be loaded into any line of the cache
- Cache control logic interprets a memory address simply as a Tag and a Word field.
- Tag field uniquely identifies a block of main memory.
- Note that no field in the address corresponds to the line number, so that the number of lines in the cache is not determined by the address format
- To determine whether a block is in the cache, the cache control logic must simultaneously examine every line's tag for a match.

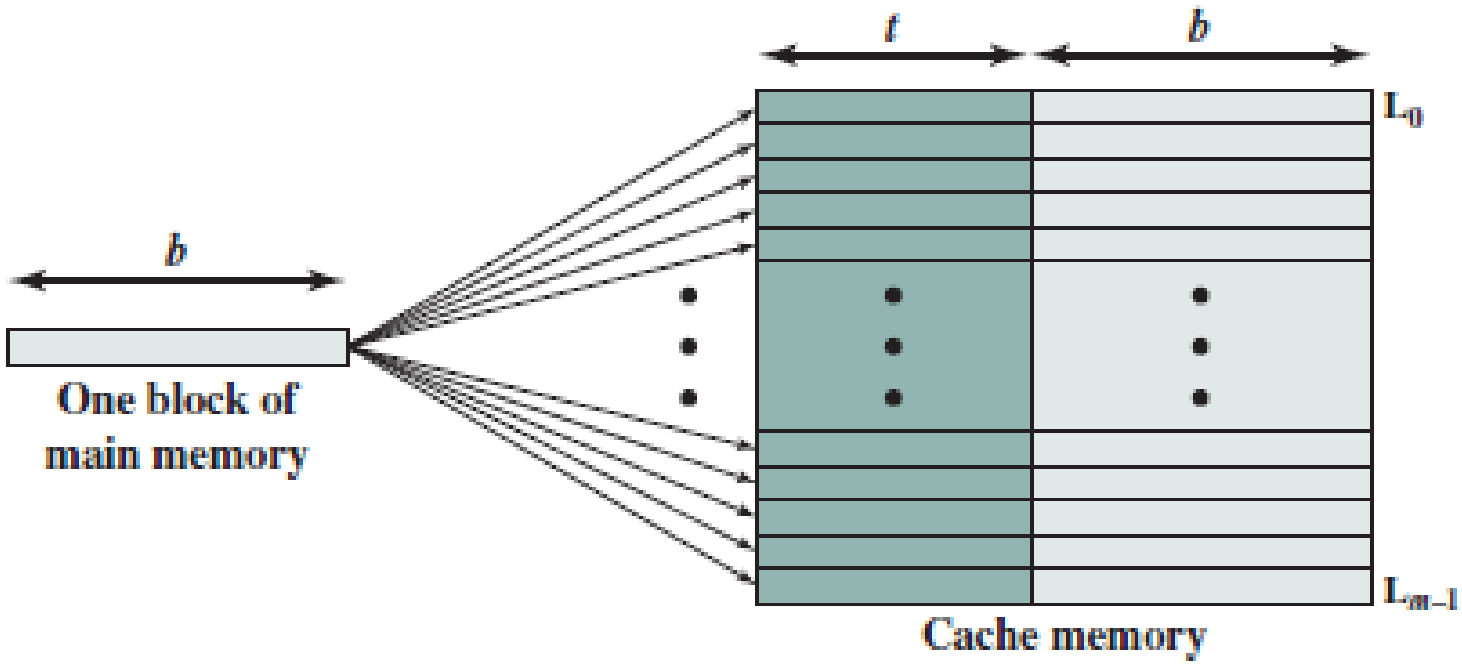

Associative mapping

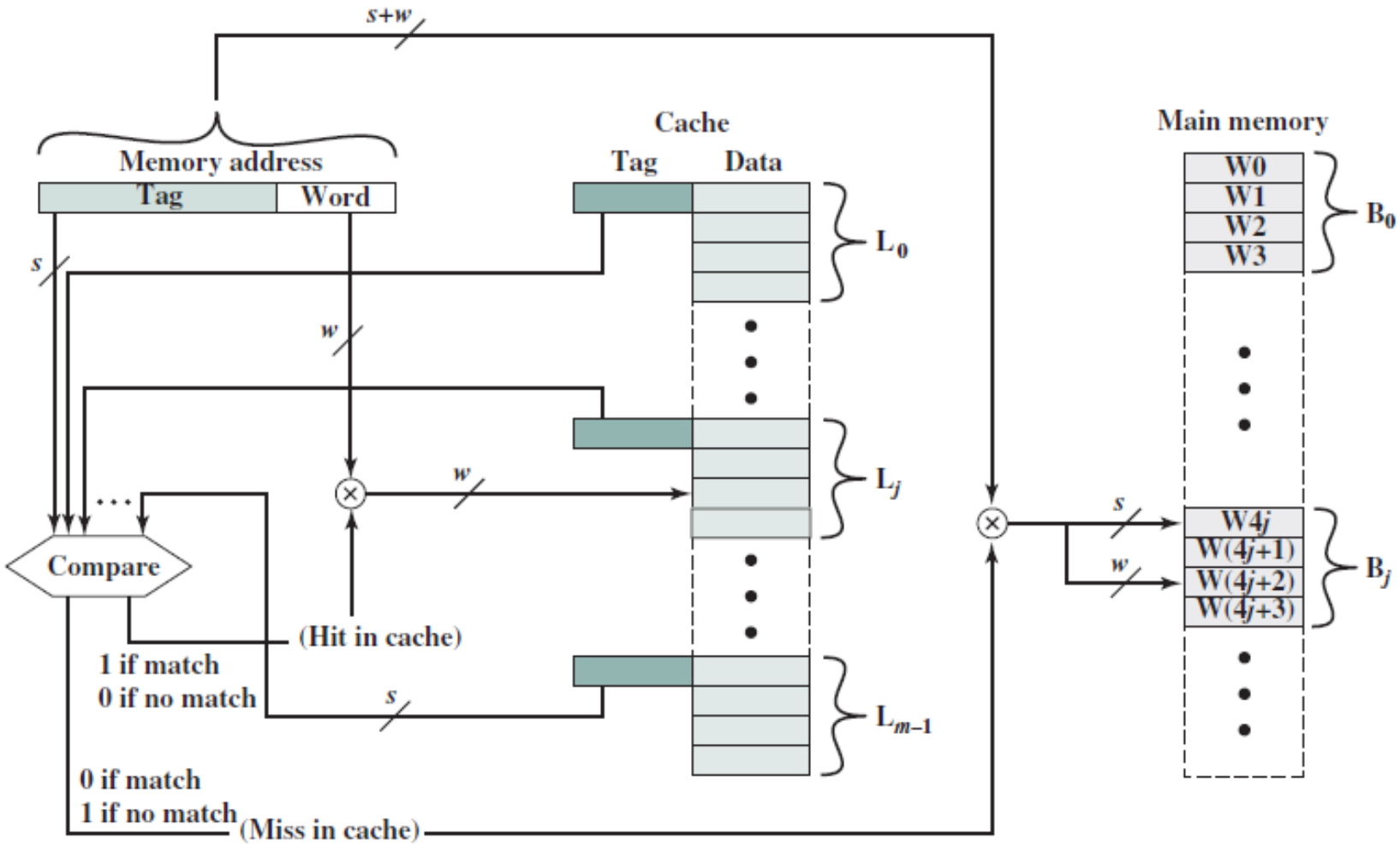

Figure 4.11 Fully Associative Cache Organization

TO SUMMARIZE,

- Address length = $(s + w)$ bits
- Number of addressable units = 2^{s+w} words or bytes
- Block size = line size = 2^{w} words or bytes
- Number of blocks in main memory = = 2^{s}
- Number of lines in cache = undetermined from address
- Size of tag = s bits

SUMMARY

- With associative mapping, there is flexibility as to which block to replace when a new block is read into the cache.
- Replacement algorithms, discussed later in this section, are designed to maximize the hit ratio.
- The principal disadvantage of associative mapping is the complex circuitry required to examine the tags of all cache lines in parallel.

SET-ASSOCIATIVE MAPPING

- Exhibits the strengths of both the direct and associative approaches while reducing their disadvantages.
- The cache consists of number sets, each of which consists of a number of lines. The relationships are

$$m = v \times k$$
$$i = j \text{ modulo } v$$

where

- i = cache set number
- j = main memory block number
- m = number of lines in the cache
- v = number of sets
- k = number of lines in each set

CONT…

- The cache control logic interprets a memory address as three fields:

- The *d* set bits specify one of $v = 2^d$ sets.
- The *s* bits of the Tag and Set fields specify one of the 2^s blocks of main memory.

TO SUMMARIZE,

- Address length = $(s + w)$ bits
- Number of addressable units = 2^{s+w} words or bytes
- Block size = line size = 2^{w} words or bytes
- Number of blocks in main memory = = 2^{s}
- Number of lines in set = k
- Number of sets = $v = 2^{d}$
- Number of lines in cache = $m = kv = k * 2^{d}$
- Size of cache = $k * 2^{d+w}$ words or bytes
- Size of tag = (s-d) bits

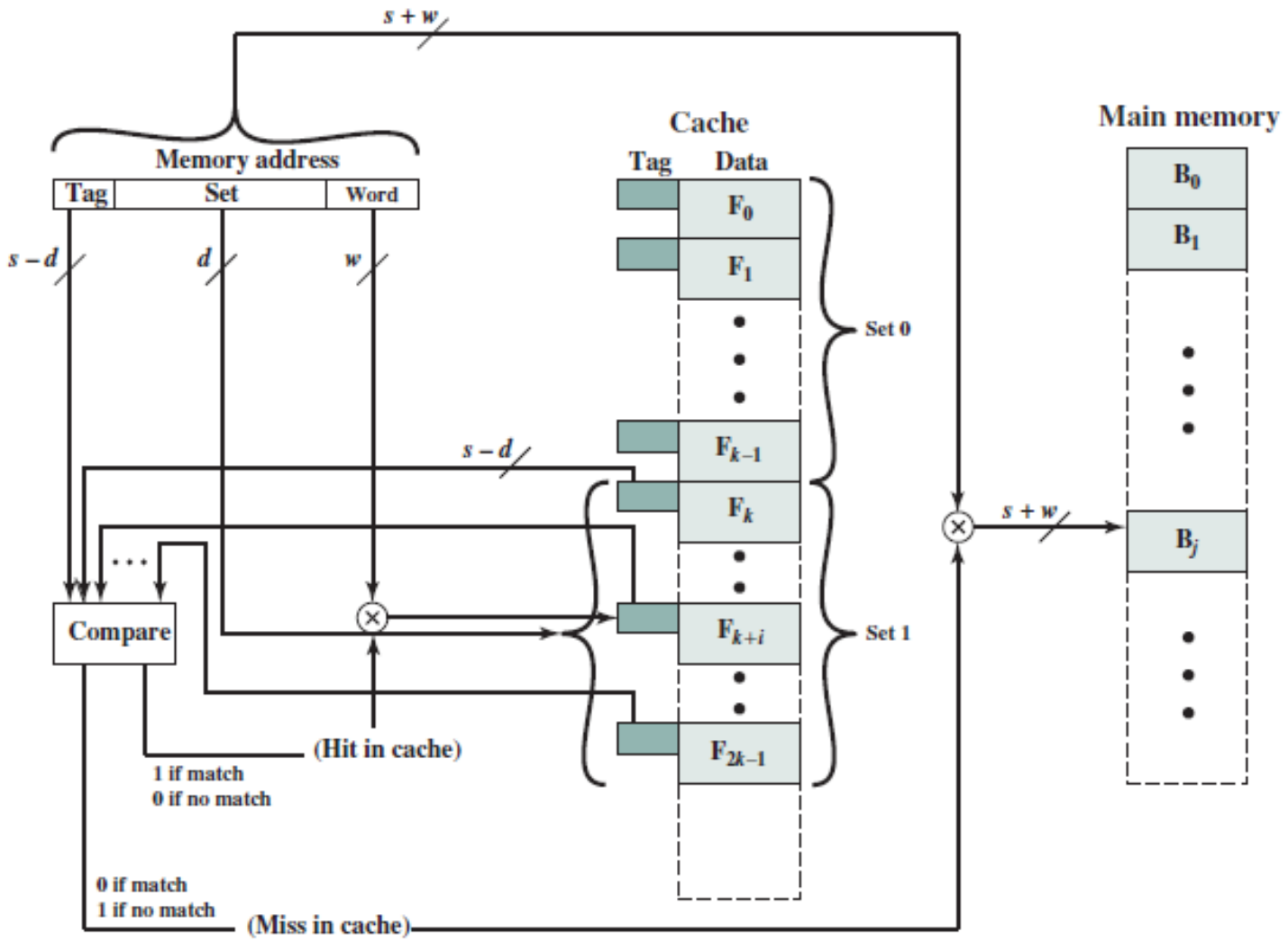

Figure 4.14 *k*-Way Set-Associative Cache Organization

REPLACEMENT ALGORITHMS

- Required when the cache is full but you need to brought another block in the cache.
  - For direct mapping, there is only one possible line.
  - For other two, you need an algorithm and it must be implemented in hardware (To achieve high speed)
- **Least recently used (LRU)**
  - Probably the most effective and most popular
  - Replace that block in the set that has been in the cache longest with no reference to it.
- **First-in-first-out(FIFO):**
  - Replace that block in the set that has been in the cache longest.
- **Least frequently used (LFU):**
  - Replace that block in the set that has experienced the fewest references.
- **Random**
  - A technique not based on usage

WRITE POLICY

- Before replacing a block in the cache line, check if any of the words in that block is altered in the cache.
  - If altered, main memory must be updated by writing the line of cache out to the block of memory before bringing in the new block.
  - If not just replace the old block with the new block

- Problems ???
  - If another device updated the main memory while that word is in cache or If a word has been altered only in the cache?
  - Multiple processors with their own local cache, keeping the same word, if one processor updates its local copy and the other don't?

WRITE THROUGH

Write through:- The simplest technique

- All write operations are made to main memory as well as to the cache, ensuring that main memory is always valid.
- Any other processor–cache module can **monitor traffic to main memory to maintain consistency** within its own cache.
  - Cons -- it generates *substantial memory traffic* and may create a *bottleneck*.

Write back:- Updates are made only in the cache , minimizes memory writes.

- When an update occurs, a **dirty bit**, or **use bit**, associated with the line is set.
- Accesses by I/O modules can be allowed only through the cache.
- This makes for complex circuitry and a potential bottleneck.

CACHE COHERENCE

Cache coherence refers to the problem of keeping the data in different caches consistent. Solutions ?????

- **Bus watching with write through:** Each cache controller monitors the address lines to detect write operations to memory by other bus masters.
- **Hardware transparency:** Additional hardware is used to ensure that all updates to main memory via cache are reflected in all caches.
- **Noncacheable memory:** Only a portion of main memory is shared by more than one processor, and this is designated as noncacheable (never copied into the cache).

LINE SIZE

- Retrieve not only desired word but a number of adjacent words as well
- Increased block size will increase hit ratio at first
  - the principle of locality
- Hit ratio will decreases as block becomes even bigger
  - Probability of using newly fetched information becomes less than probability of reusing replaced
- Larger blocks
  - Reduce number of blocks that fit in cache
  - Data overwritten shortly after being fetched
  - Each additional word is less local so less likely to be needed
- No definitive optimum value has been found
- 8 to 64 bytes seems reasonable
- For HPC systems, 64- and 128-byte most common

MULTILEVEL CACHES

- High logic density enables caches on chip
  - Faster than bus access
  - Frees bus for other transfers
- Common to use both on and off chip cache
  - L1 on chip, L2 off chip in static RAM
  - L2 access much faster than DRAM
  - L2 often uses separate data path
  - L2 may now be on chip
  - Resulting in L3 cache

UNIFIED V SPLIT CACHES

- One cache for data and instructions or two, one for data and one for instructions
- Advantages of unified cache
  - Higher hit rate
    - Balances load of instruction and data fetch
    - Only one cache to design & implement
- Advantages of split cache
  - Eliminates cache contention between instruction fetch/decode unit and execution unit
    - Important in pipelining

CHAPTER 3
PART 2

Internal Memory

LEARNING OBJECTIVES

- Present an overview of the principle types of semiconductor main memory.
- Understand the working principle of RAM
- Know the different types of ROM
- Know how memory is organized
- Understand the operation of a basic code that can detect and correct single-bit errors in 8-bit words.

SEMICONDUCTOR MEMORY

- Semiconductor memory is a type of semiconductor device used to store digital data.
- The basic element of a semiconductor memory is the **memory cell** which is a tiny circuit used to store a single bit which consisting of one to several transistors.
- Semiconductor memory types
  - **Volatile**: loses its stored data when the power to the memory chip is turned off. E.g. RAM (SRAM, DRAM, CAM)
  - **Non-volatile**: preserves the data stored in it during periods when the power to the chip is turned off. E.g. ROM, NVRAM, Flash Memory

MEMORY CELL OPERATION

- All semiconductor memory cells share the following properties
  - They exhibit two stable states, which can be used to represent binary 1 or 0.
  - They are capable of being written into (at least once), to set the state.
  - They are capable of being read to sense the state.

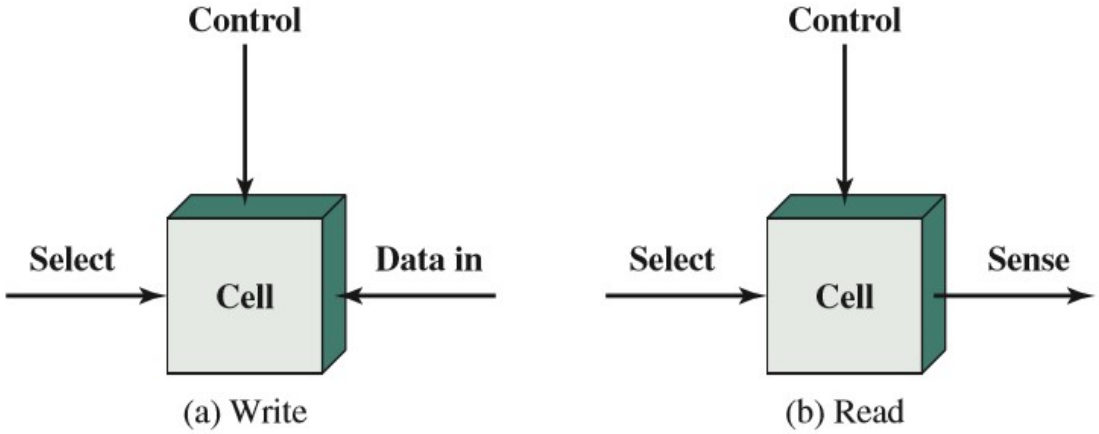

RANDOM-ACCESS MEMORY (RAM)

- RAM
  - Misnamed as all semiconductor memory is random access
  - Read/Write from/into the memory easily and rapidly which accomplished through the use of electrical signals
  - Volatile
    - can be used only as temporary storage
  - RAM forms
    - Static or dynamic

DYNAMIC RAM

- DRAM made with cells that store data as charge on capacitors.
- The presence or absence of charge in a capacitor is interpreted as a binary 1 or 0.
  - Problem ? Charges leaks because capacitors have a natural tendency to discharge.
  - Solutions ? DRAM needs periodic charge refreshing even when powered

DRAM CELL STRUCTURE

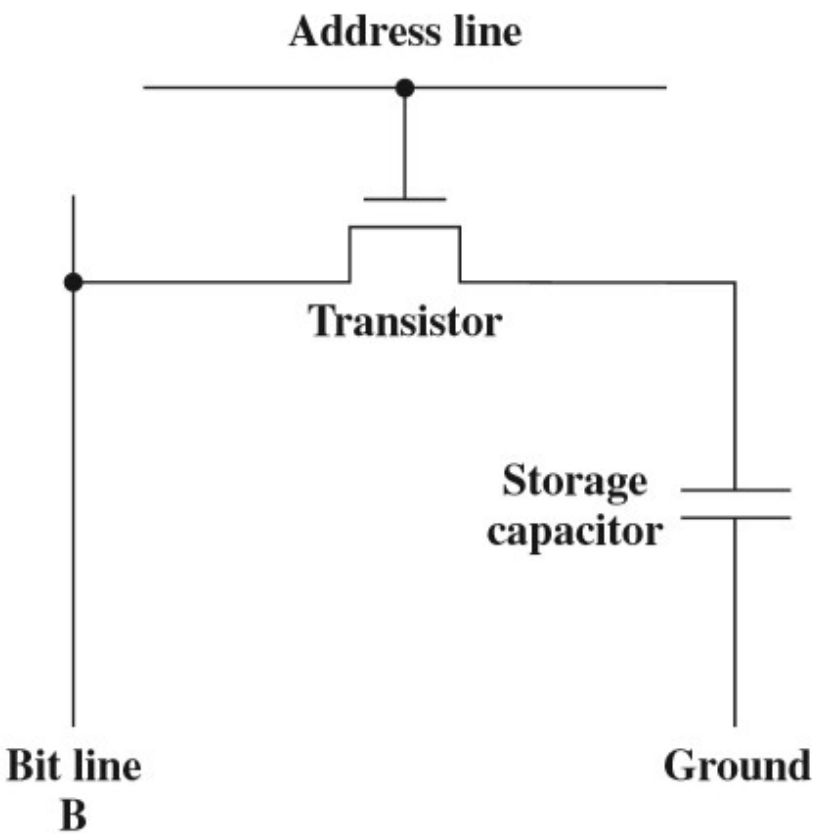

Essentially analogue: Level of charge determines value

DRAM OPERATION

- Address line active when bit read or written
  - Transistor switch closed (current flows)
- Write
  - Voltage to bit line
    - High for 1 low for 0
  - Then signal address line
    - Transfers charge to capacitor
- Read
  - Address line selected
    - transistor turns on
  - Charge from capacitor fed via bit line to sense amplifier
    - Compares with reference value to determine 0 or 1
  - Capacitor charge must be restored

STATIC RAM

- SRAM uses the same logic elements used in the processor.
- In a SRAM, binary values are stored using traditional flip-flop logic-gate configurations.
  - Bits stored as on/off switches
- No charges to leak
- No refreshing needed when powered

SRAM CELL STRUCTURE

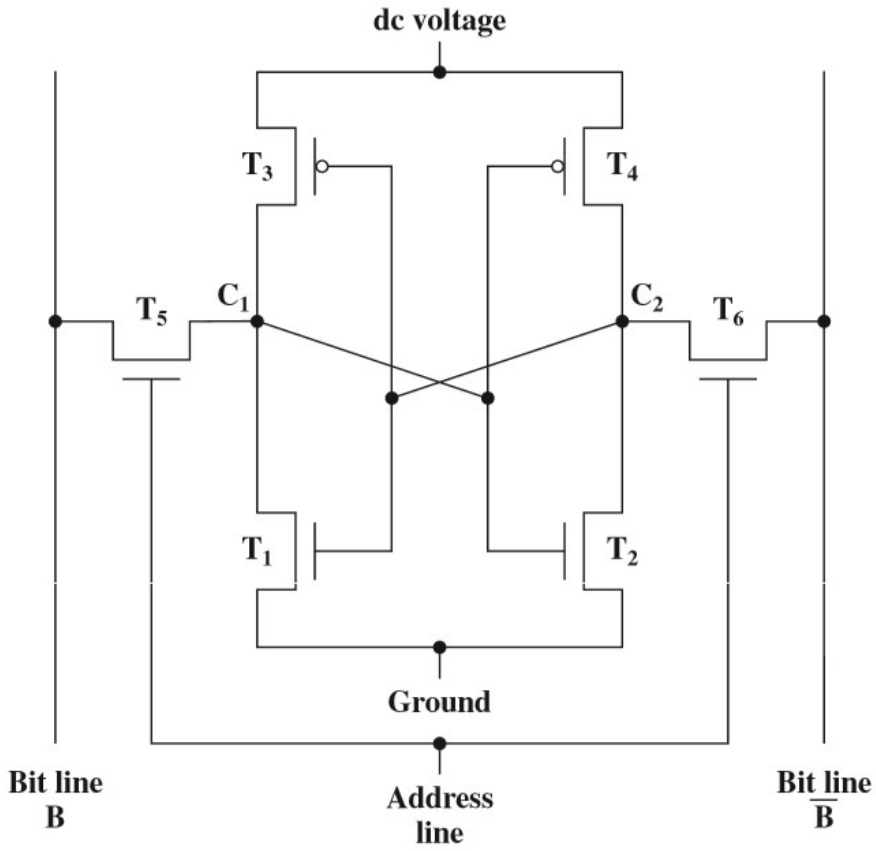

STATIC RAM OPERATION

- Transistor arrangement gives stable logic state
- State 1
  - C1 high, C2 low
  - T1 T4 off, T2 T3 on
- State 0
  - C2 high, C1 low
  - T2 T3 off, T1 T4 on
- Address line transistors T5 T6 is switch
- Write – apply value to B & compliment to B
- Read – value is on line B

SRAM V DRAM

- Both volatile: Power needed to preserve data
- Dynamic cell
  - Simpler to build, smaller than a static memory cell
  - More dense (smaller cells = more cells per unit area)
  - Less expensive
  - Needs refresh circuitry
  - Used for the main memory
  - Favored for large memory requirements

- Static
  - Faster but more expensive
  - More complex construction
  - Used for Cache Memory

READ ONLY MEMORY (ROM)

- Non-volatile:- Permanent storage
- As the name suggests, a read-only memory
- Usually used to store system software which must be immediately accessible to the computer, such as the **BIOS** program which starts the computer.
- The data actually wired into the chip as part of the fabrication process.
  - Possible Problem?
    - The writing process is slow and requires a relatively large fixed cost
    - There is no room for error

ROM TYPES

- **Masked ROM/ROM**:
  - The data is programmed into the chip during manufacture, so it is only used for high-volume production runs.
  - It cannot be rewritten with new data.

- **Programmable ROM (PROM)**
  - Less expensive alternative
  - May be written into only once.
  - The writing process is performed electrically using PROM programmer
    - can may be performed by a supplier or customer at a time later than the original chip fabrication.

ROM TYPES (CONT…)

Read-mostly memory:- EPROM, EEPROM and Flash memory

- EPROM (Erasable Programmable ROM)
  - The data in it can be rewritten by exposing it to an ultraviolet light to erase the existing data, and write new data using PROM programmer.
  - This erasure process can be performed repeatedly; each erasure can take as much as 20 minutes to perform.
  - EPROM is more expensive than PROM, but it has the advantage of the multiple update capability
  - It is often used for prototypes and small production run devices, where the program in it may have to be changed at the factory.

ROM TYPES (CONT…)

- EEPROM (Electrically Erasable PROM)
  - This is a read-mostly memory that can be written into at any time without erasing prior contents; only the
  - In this type the data can be rewritten electrically without erasing prior contents, while the chip is on the circuit board, but the writing process is slow.
  - This type is used to hold firmware, the low level microcode which runs hardware devices, such as the BIOS.
  - EEPROM is more expensive than EPROM and also is less dense, supporting fewer bits per chip.

ROM TYPES (CONT…)

- Flash memory
  - so named because of the speed with which it can be reprogrammed.
  - It’s the lowest cost per bit memory in our planet.
  - Intermediate between EPROM and EEPROM in both cost and functionality.
    - Like EEPROM, flash memory uses an electrical erasing technology.
    - Much faster than EPROM (entire flash memory can be erased in one or a few seconds)
    - It is possible to erase just blocks of memory rather than an entire chip
    - Flash memory does not provide byte-level erasure

SUMMARY OF VARIOUS MEMORY TYPES

Memory Type	Category	Erasure	Max Erase Cycle	Write Mechanism	Volatility	Cost (per Byte)	Speed
SRAM	Read-Write memory	Electrically, byte-level	Unlimited	Electronically	Volatile	Expensive	Fast
DRAM						Moderate	Moderate
NVRAM					Non-Volatile	Expensive (SRAM + battery)	Fast
Masked ROM	Read only Memory	Not possible	n/a	Mask		Inexpensive	
PROM				Electronically		Moderate	
EPROM	Read-mostly memory	UV light, chip-level	Limited				
EEPROM		Electrically, byte-level				Expensive	Fast to read, slow to erase/write
Flash		Electrically, block-level				Moderate	

ORGANIZATION IN DETAIL

- A 16Mbit chip can be organised as 1M of 16 bit words
- A 16Mbit chip can be organised as a 2048 x 2048 x 4bit array
  - Reduces number of address pins
    - Multiplex row address and column address
    - 11 pins to address (211=2048)
    - Adding one more pin doubles range of values so x4 capacity

MEMORY ORGANIZATION

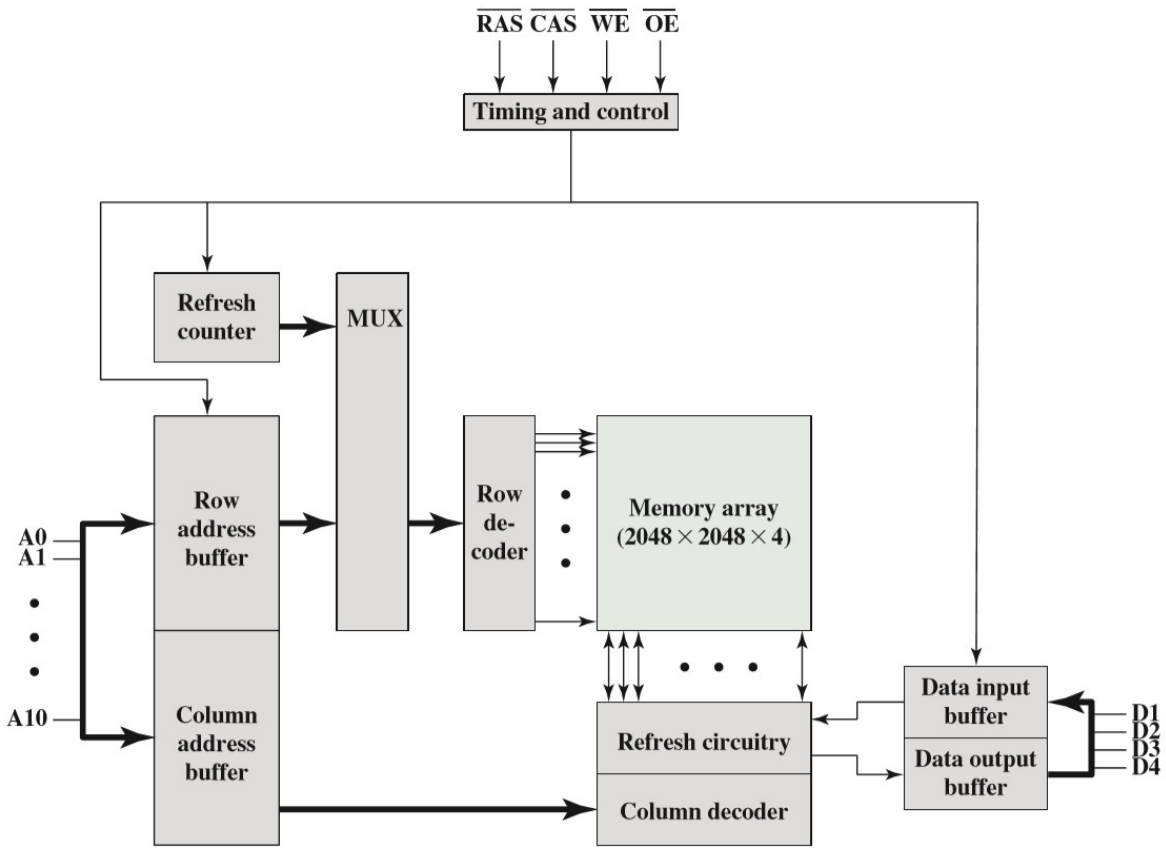

Typical 16 Mb DRAM (4M x 4)

CHIP PACKAGING

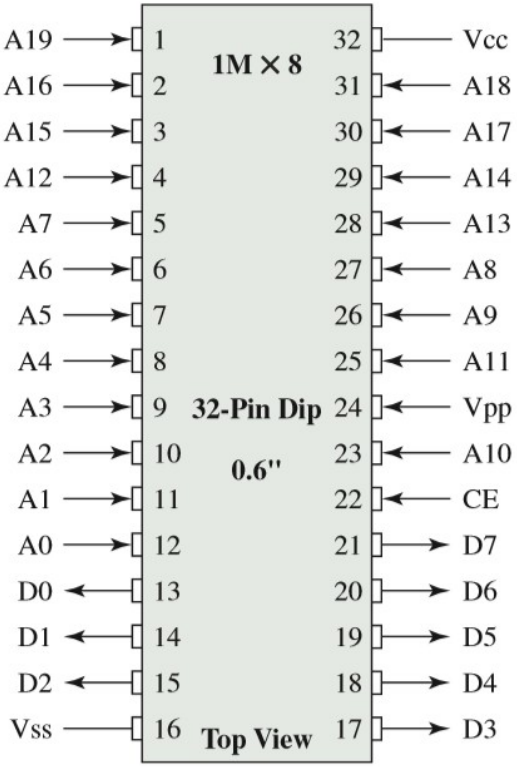

(a) 8-Mbit EPROM

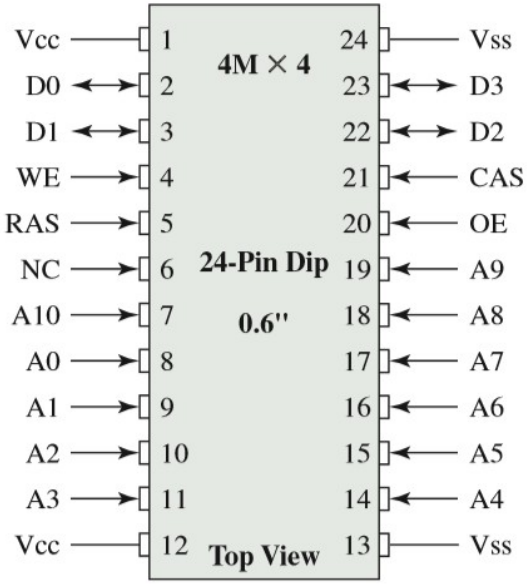

(b) 16-Mbit DRAM

INTERLEAVED MEMORY

- Collection of DRAM chips
- A number of chips can be grouped together to form a memory bank.
- Banks independently service read or write requests
- K banks can service k requests simultaneously
  - increasing memory read or write rates by a factor of K.
- If consecutive words of memory are stored in different banks, then the transfer of a block of memory is speeded up.

ERROR CORRECTION

- A semiconductor memory system is subject to errors.
  - A **hard failure** is a permanent physical defect so that the memory cell or cells affected can't reliably store data but become stuck at 0 or 1 or switch erratically between 0 and 1.
    - caused by harsh environmental abuse, manufacturing defects, and wear.
  - A soft error is a random, non-destructive event that alters the contents of one or more memory cells without damaging the memory.
    - caused by power supply problems or alpha particles emitted by traces of radioactive elements (such as thorium and uranium) present in the packaging materials of the device.

DETECTING AND CORRECTING ERRORS PROCESS

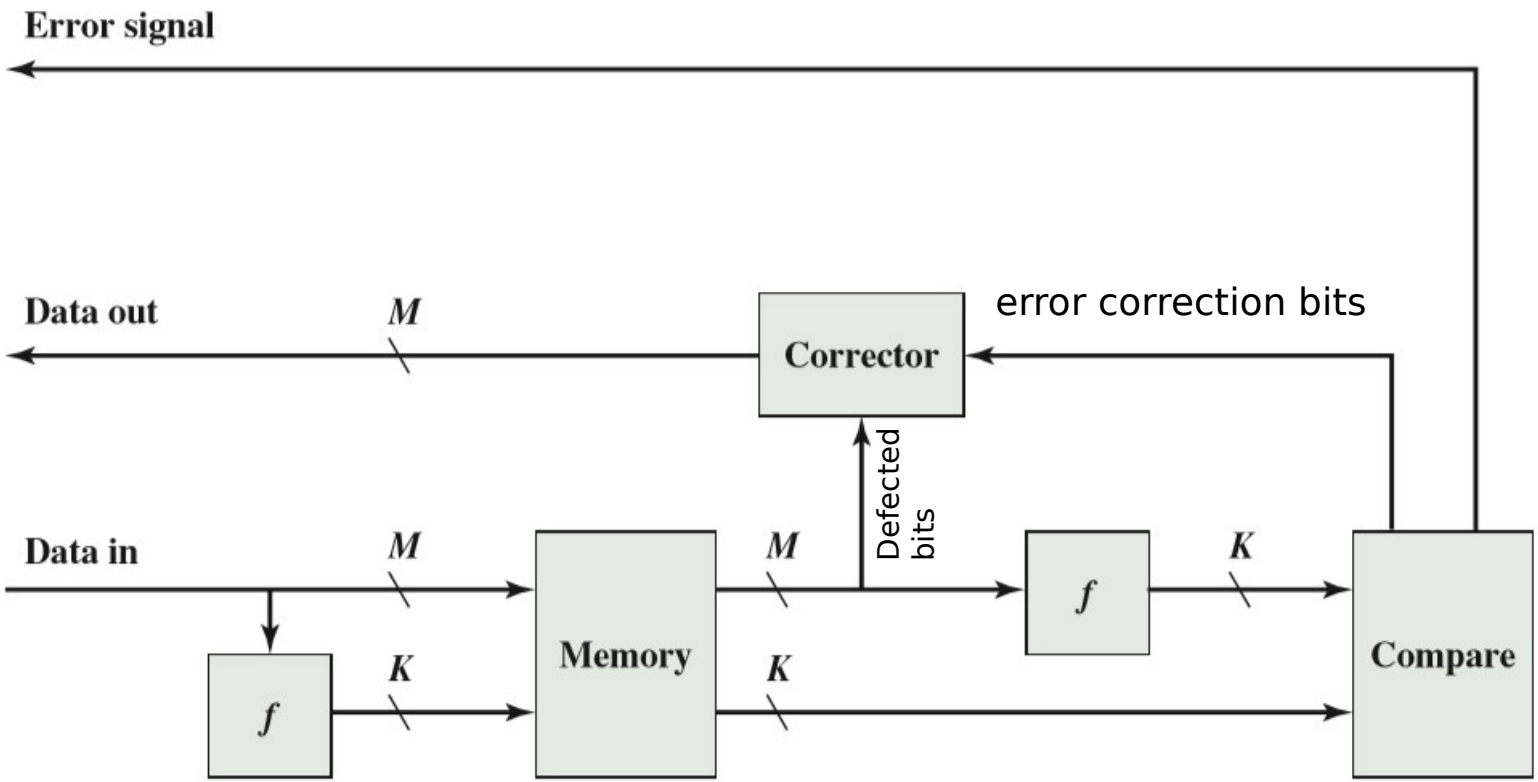

HAMMING ERROR-CORRECTING CODE

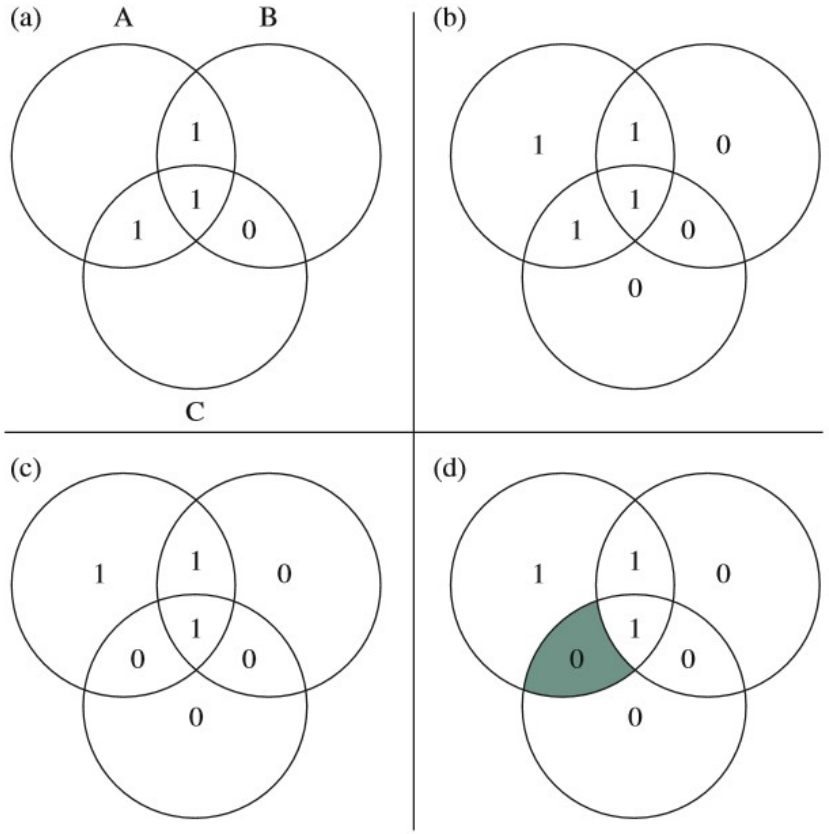

READING ASSIGNMENT

- Improvements to DRAM: Synchronous DRAM and DDR SDRAM
- The properties of contemporary DDR DRAM organizations.
- Difference between NOR and NAND flash memory.
- Newer non-volatile solid-state memory technologies.

69

PART 3

External Memory

LEARNING OBJECTIVES

- Understand the key properties of magnetic disks.
- Understand the performance issues involved in magnetic disk access.
- Explain the concept of RAID and describe the various levels. Reading Assignment.
- Compare and contrast hard disk drives and solid disk drives.
- Describe in general terms the operation of flash memory.
- Understand the differences among the different optical disk storage media.
- Present an overview of magnetic tape storage technology.

TYPES OF EXTERNAL MEMORY

- Magnetic Disk (HDD)
- RAID
- Solid State Drives (SSD)
- Optical
  - CD-ROM
  - CD-Recordable (CD-R)
  - CD-R/W
  - DVD
- Magnetic Tape

MAGNETIC DISK

- A disk is a circular platter constructed of nonmagnetic material, called the substrate
- Disk substrate coated with magnetisable material
- Substrate used to be aluminium, Now glass
  - Improved surface uniformity
    - Increases reliability
  - Reduction in surface defects
    - Reduced read/write errors
  - Lower flight heights (See later)
  - Better stiffness to reduce disk dynami
  - Better shock/damage resistance

MAGNETIC DISK COMPONENTS

MAGNETIC READ AND WRITE MECHANISMS

- Recording & retrieval via conductive coil called a head
- May be single read/write head or separate ones
- During read/write, head is stationary, platter rotates
- Write
  - Current through coil produces magnetic field
  - Pulses sent to head
  - Magnetic pattern recorded on surface below
- Read (traditional)
  - Magnetic field moving relative to coil produces current
  - Coil is the same for read and write
- Read (contemporary)
  - Separate read head, close to write head
  - Partially shielded magneto resistive (MR) sensor
  - Electrical resistance depends on direction of magnetic field
  - High frequency operation
    - Higher storage density and speed

INDUCTIVE WRITE/MAGNETORESISTIVE READ HEAD

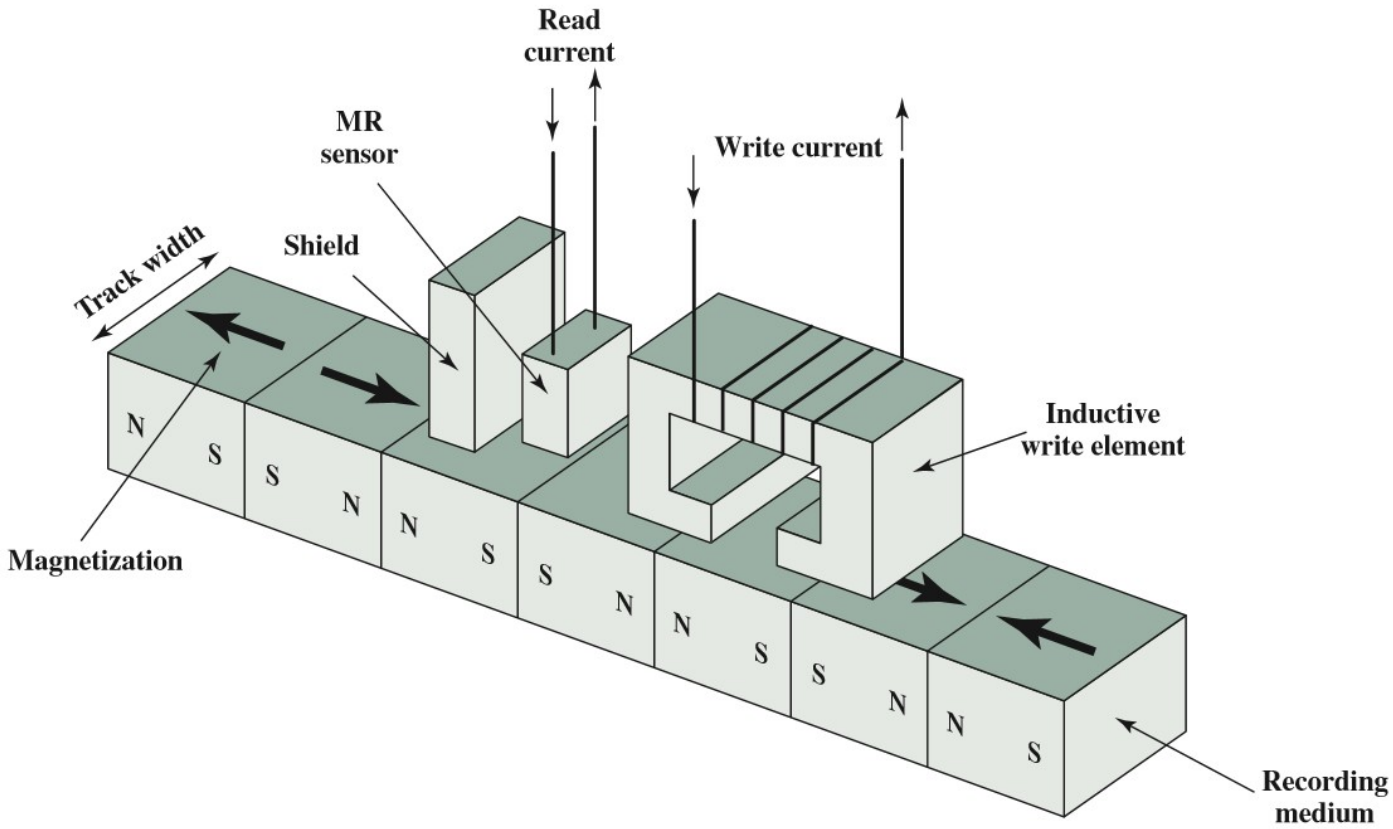

DATA ORGANIZATION AND FORMATTING

- Concentric rings or tracks
  - Gaps between tracks
  - Reduce gap to increase capacity
  - Same number of bits per track (variable packing density)
  - Constant angular velocity
- Tracks divided into sectors
- Minimum block size is one sector
- May have more than one sector per block

DISK DATA LAYOUT

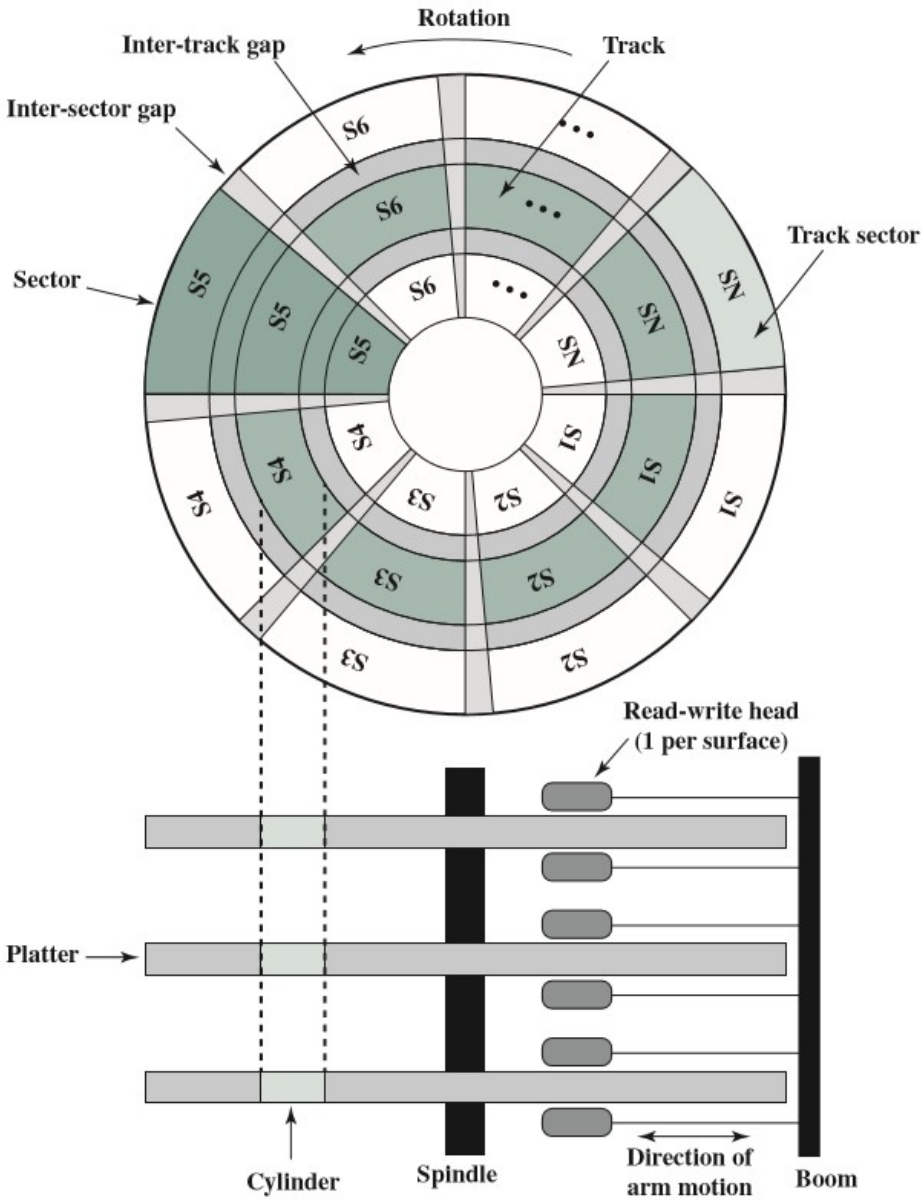

DISK VELOCITY

- Bit near centre of rotating disk passes fixed point slower than bit on outside of disk
- Increase spacing between bits in different tracks
- Rotate disk at constant angular velocity (CAV)
  - Gives pie shaped sectors and concentric tracks
  - Individual tracks and sectors addressable
  - Move head to given track and wait for given sector
  - Waste of space on outer tracks
    - Lower data density
- Can use zones to increase capacity
  - Each zone has fixed bits per track
  - More complex circuitry

COMPARISON OF DISK LAYOUT METHODS

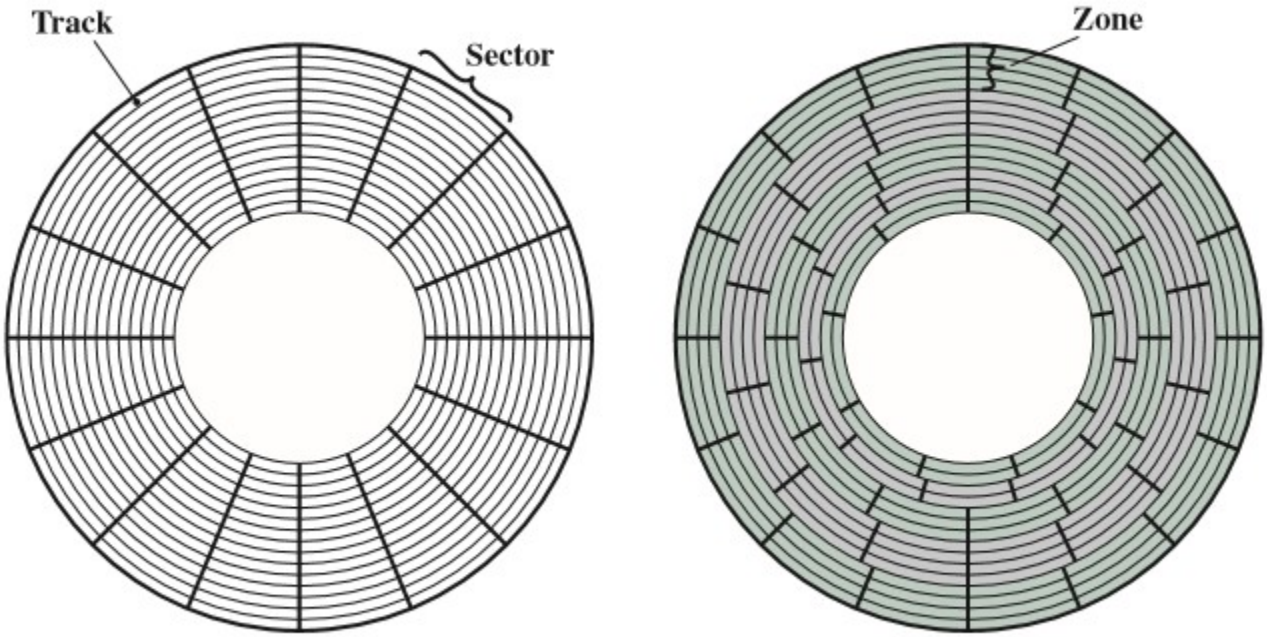

(a) Constant angular velocity

(b) Multiple zone recording

FINDING SECTORS

- Must be able to identify start of track and sector
- Format disk
  - Additional information not available to user
  - Marks tracks and sectors

PHYSICAL CHARACTERISTICS

- Fixed or movable head
- Removable or fixed disk
- Single or double (usually) sided
- Single or multiple platter
- Head mechanism
  - Contact (Floppy)
  - Fixed gap
  - Flying (Winchester)

FIXED/MOVABLE HEAD DISK

Fixed head

- One read write head per track
- Heads mounted on fixed ridged arm

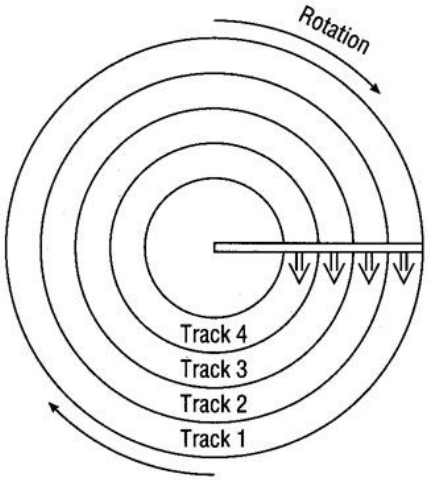

Movable head

- One read write head per side
- Mounted on a movable arm

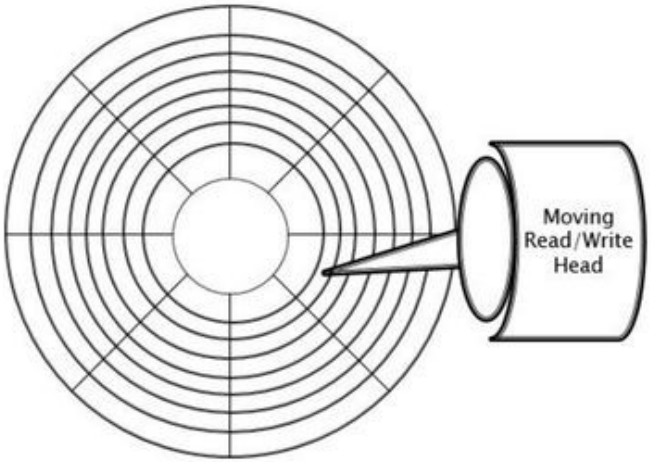

REMOVABLE OR FIXED DISK

Removable disk

- Can be removed from drive and replaced with another disk.
- Provides unlimited storage capacity.
- Disk may be moved from one computer system to another easily.
- E.g. Floppy disks and ZIP cartridge disks

Non-Removable disk

- Permanently mounted in the drive
- E.g. Hard disk

SINGLE OR DOUBLE (USUALLY) SIDED

Single Sided

- The magnetisable coating is applied to one sides of the platter
- Less expensive

Double Sided

- The magnetisable coating is applied to both sides of the platter.
- Increased size

SINGLE OR MULTIPLE PLATTER

- Single Platter
- Multiple Platter
  - Multiple platters stacked vertically a fraction of an inch apart.
  - Employ a movable head, with one read-write head per platter surface.
  - All of the heads are mechanically fixed so that all are at the same distance from the center of the disk and move together.

MULTIPLE PLATTERS

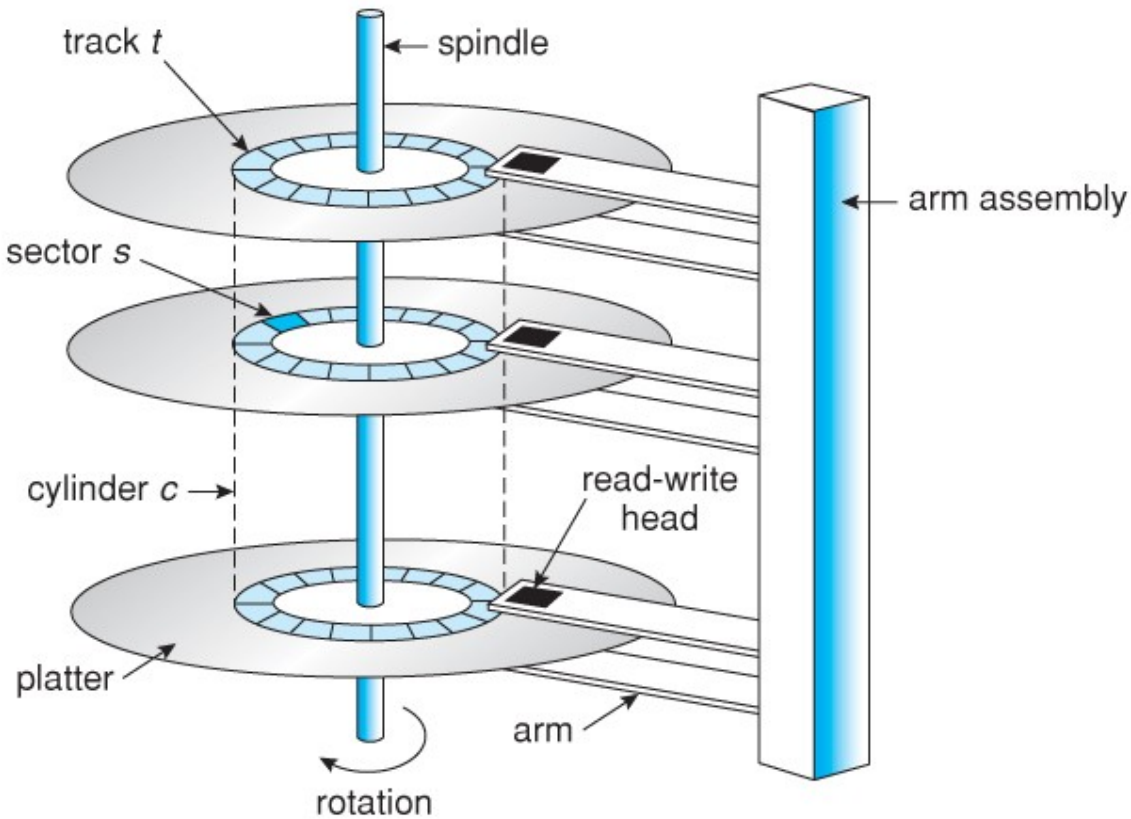

HEAD MECHANISM

- Fixed gap
  - The read- write head has been positioned a fixed distance above the platter, allowing an air gap
- Contact
  - The read- write head comes into physical contact with the medium during a read or write operation. Used in Floppy Disks
- Flying (Winchester)
  - Noncontact system while the disk is rotating
  - The head is actually an aerodynamic foil that rests lightly on the platter's surface when the disk is motionless.
  - The air pressure generated by a spinning disk is enough to make the foil rise above the surface.
  - This head mechanism increases the size of the disk. How?

DISK PERFORMANCE PARAMETERS

- Seek time:- is the time required to move the disk arm to the required track.
- The time it takes for the beginning of the sector to reach the head is known as rotational delay, or rotational latency.
- Access time:- is the time it takes to get into position to read or write. => Seek time + rotational delay
- Transfer time:- The transfer time to or from the disk depends on the rotation speed of the disk in the following fashion:

$$T = \frac{b}{rN}$$

where

T = transfer time
b = number of bytes to be transferred
N = number of bytes on a track
r = rotation speed, in revolutions per second

DISK PERFORMANCE PARAMETERS (CONT…)

- Thus the total average read or write time Ttotal can be expressed as

$$T_{total} = T_s + \frac{1}{2r} + \frac{b}{rN}$$

- where T_s is the average seek time. Note that on a zoned drive, the number of bytes per track is variable, complicating the calculation

RAID

- RAID (Redundant Array of Independent Disks)
- Arrays of disks (7) that operate independently and in parallel.
- It's a data storage virtualization technology that combines multiple physical disk drive components into one or more logical units for the purposes of data redundancy, performance improvement, or both..
  - Allowing multiple heads and actuators to operate simultaneously achieves higher I/O and transfer rates,
- *To know more refer to Chapter 6 section 6.2 of your textbook.*

OPTICAL DISK

- **CD:- Compact Disk**
  - A non-erasable disk that stores digitized audio information.
  - The standard system uses 12-cm disks and can record more than 60 minutes of uninterrupted playing time.
- **CD-ROM:- Compact Disk Read-Only Memory**
  - A non-erasable disk used for storing computer data.
  - The standard system uses 12-cm disks and can hold more than 650 Mbytes.

OPTICAL DISK (CONT..)

- **CD-R:- CD Recordable**
  - Similar to a CD-ROM. The user can write to the disk only once.
- **CD-RW:- CD Rewritable**
  - Similar to a CD-ROM. The user can erase and rewrite to the disk multiple times.
- **DVD:- Digital Versatile Disk**
  - A technology for producing digitized, compressed representation of video information, as well as large volumes of other digital data.
  - Both 8 and 12 cm diameters are used, with a double-sided capacity of up to 17 GB. The basic DVD is read-only (DVD-ROM).

OPTICAL DISK (CONT..)

- **DVD-R:- DVD Recordable**
  - Similar to a DVD-ROM. The user can write to the disk only once.
  - Only one-sided disks can be used.
- **DVD-RW:- DVD Rewritable**
  - Similar to a DVD-ROM. The user can erase and rewrite to the disk multiple times. Only one-sided disks can be used.
- **Blu-Ray DVD**
  - High definition video disk.
  - Provides considerably greater data storage density than DVD, using a 405-nm (blue-violet) laser. A single layer on a single side can store 25 Gbytes.

HOW TO READ FROM OPTICAL MEDIA

- All Optical media (CD, DVD, Blu-Ray etc.) have pits and lands.
  - These are microscopic and represent the binary information of the data stored on the disc.
- Information is retrieved from an Optical media by a low-powered laser housed in an optical-disk player, or drive unit.
- When the laser hits the surface of the disk, the intensity of the reflected light of the laser changes as it encounters a pit.
  - A land (smooth surface) is reflective and reflects back at higher intensity into a sensor to register it as a I, but
  - When the light hits a pit (somewhat rough surface), the light scatters and a low intensity is reflected back to the source, thus a O is registered.

HOW TO READ FROM OPTICAL MEDIA

- The change between pits and lands is detected by a photosensor and converted into a digital signal.

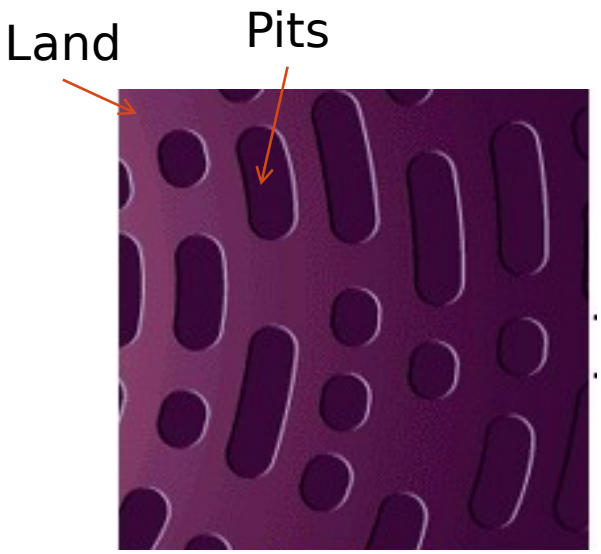

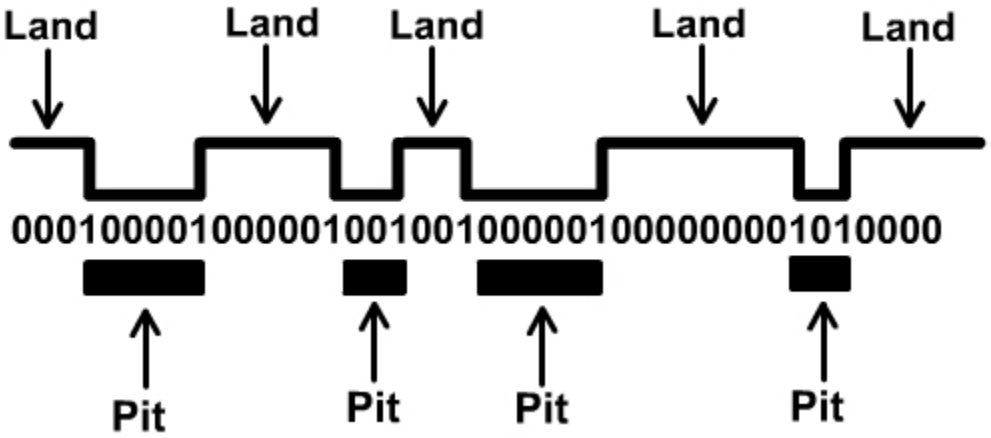

HOW TO WRITE/ERASE OPTICAL MEDIA

- Usually, if you want to burn data to a CD or DVD, first you need format the disk.

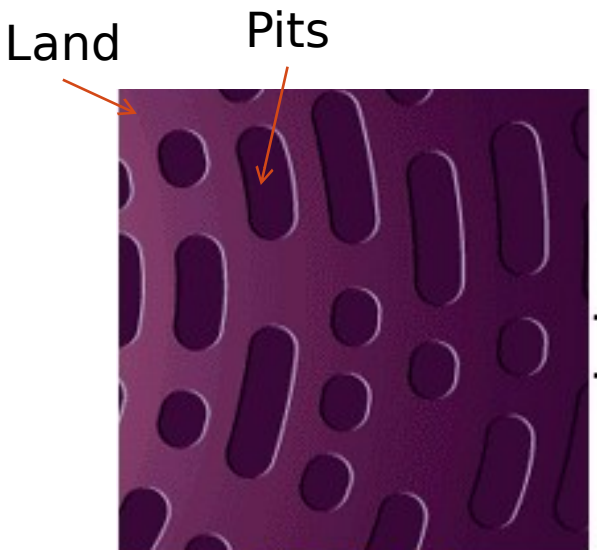

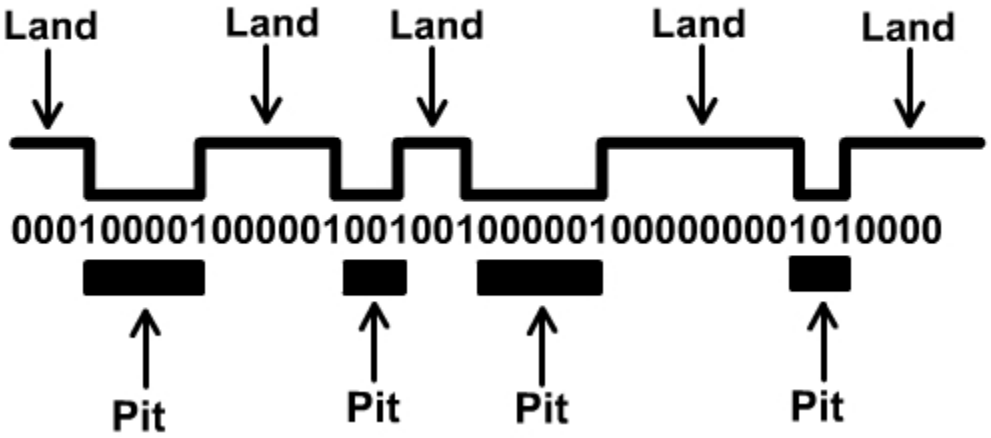

MAGNETIC TAPE

- Tape systems use the same reading and recording techniques as disk systems.
- The medium is flexible polyester (similar to that used in some clothing) tape coated with magnetizable material.
- Most modern systems instead use serial recording, in which data are laid out as a sequence of bits along each track, as is done with magnetic disks.
- A tape drive is a sequential-access device.

MAGNETIC TAPE (CONT.)

- In contrast to the tape, the disk drive is referred to as a direct-access device.
- Widely used as the lowest-cost, slowest-speed member of the memory hierarchy.