Unit 3: SEMI CONDUCTOR DEVICES & MOTOR CONTROLLING

by:

bharath ravichandiran

Semiconductor —I

- Materials that permit flow of electrons are called conductors (e.g., gold, silver, copper, etc.).
- Materials that block flow of electrons are called insulators (e.g., rubber, glass, Teflon, mica, etc.).
- Materials whose conductivity falls between those of conductors and insulators are called semiconductors.
- Semiconductors are "part-time" conductors whose conductivity can be controlled.

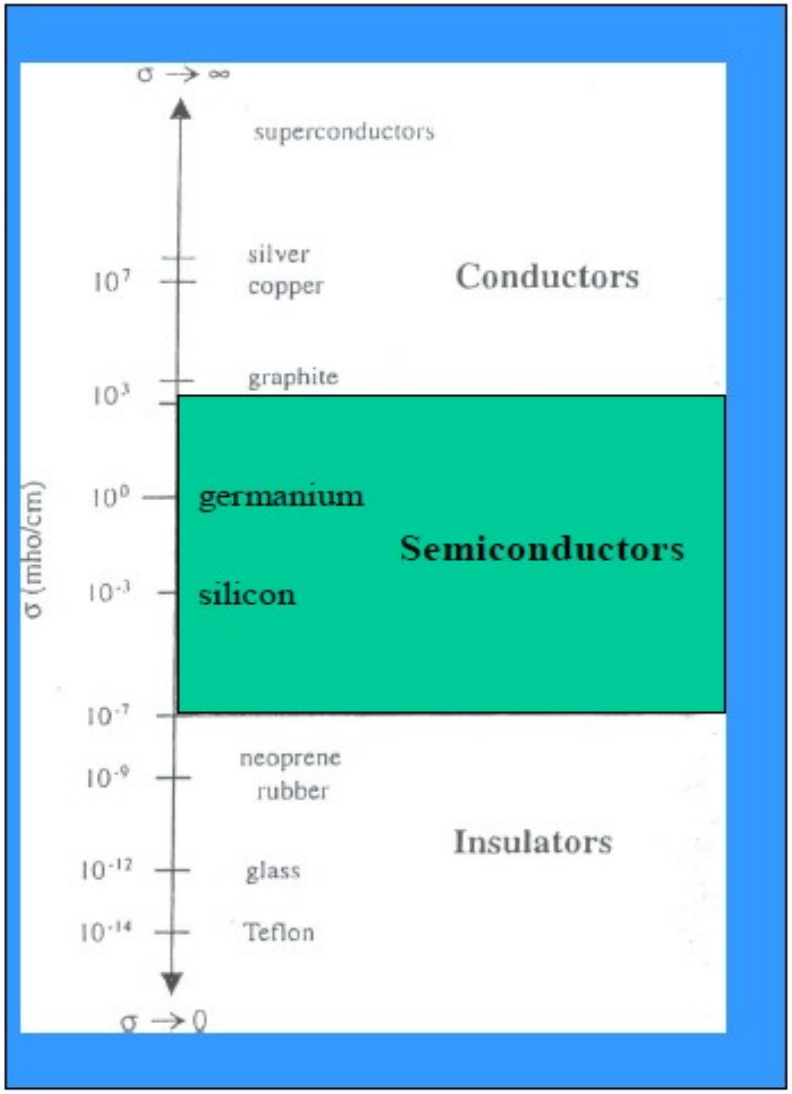

Semiconductor —II

- Silicon is the most common material used to build semiconductor devices.
- Si is the main ingredient of sand and it is estimated that a cubic mile of seawater contains 15,000 tons of Si.
- Si is spun and grown into a crystalline structure and cut into wafers to make electronic devices.

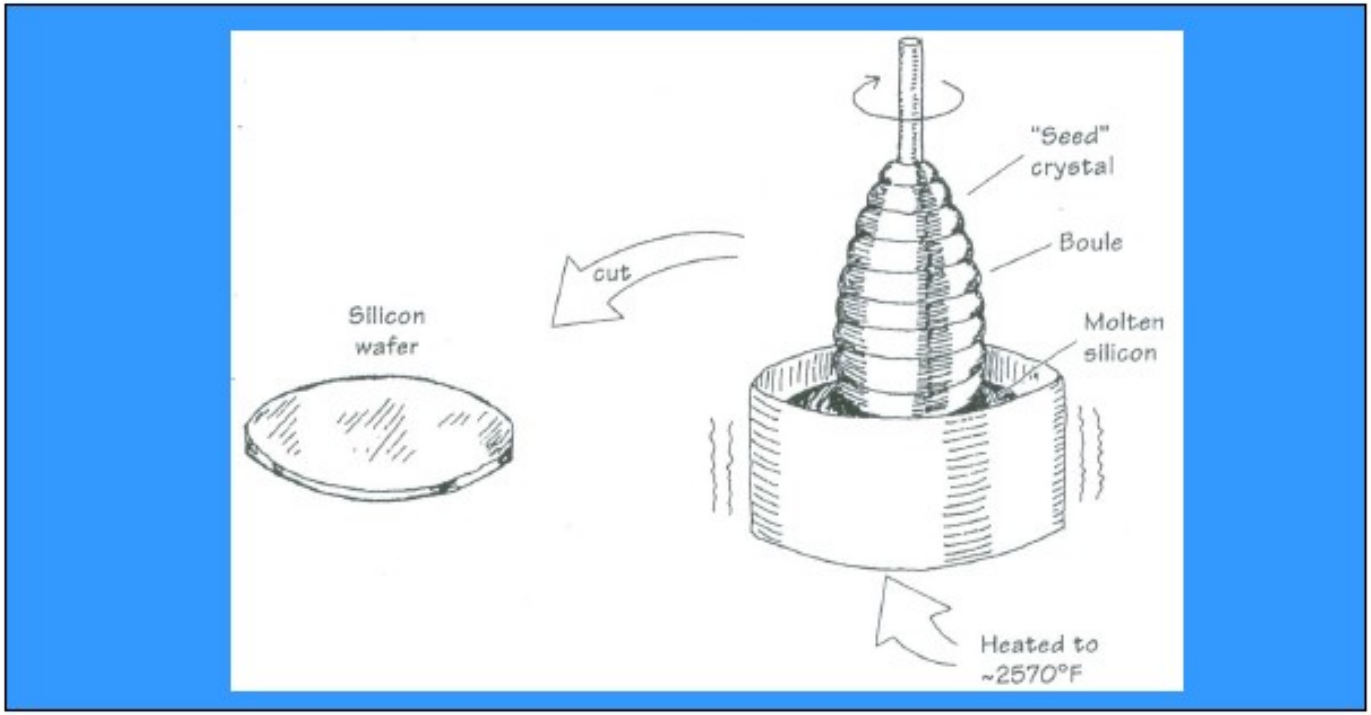

Semiconductor —III

- Atoms in a pure silicon wafer contains four electrons in outer orbit (called valence electrons).
  - Germanium is another semiconductor material with four valence electrons.
- In the crystalline lattice structure of Si, the valence electrons of every Si atom are locked up in covalent bonds with the valence electrons of four neighboring Si atoms.
  - In pure form, Si wafer does not contain any free charge carriers.
  - An applied voltage across pure Si wafer does not yield electron flow through the wafer.
  - A pure Si wafer is said to act as an insulator.
- In order to make useful semiconductor devices, materials such as phosphorus (P) and boron (B) are added to Si to change Si's conductivity.

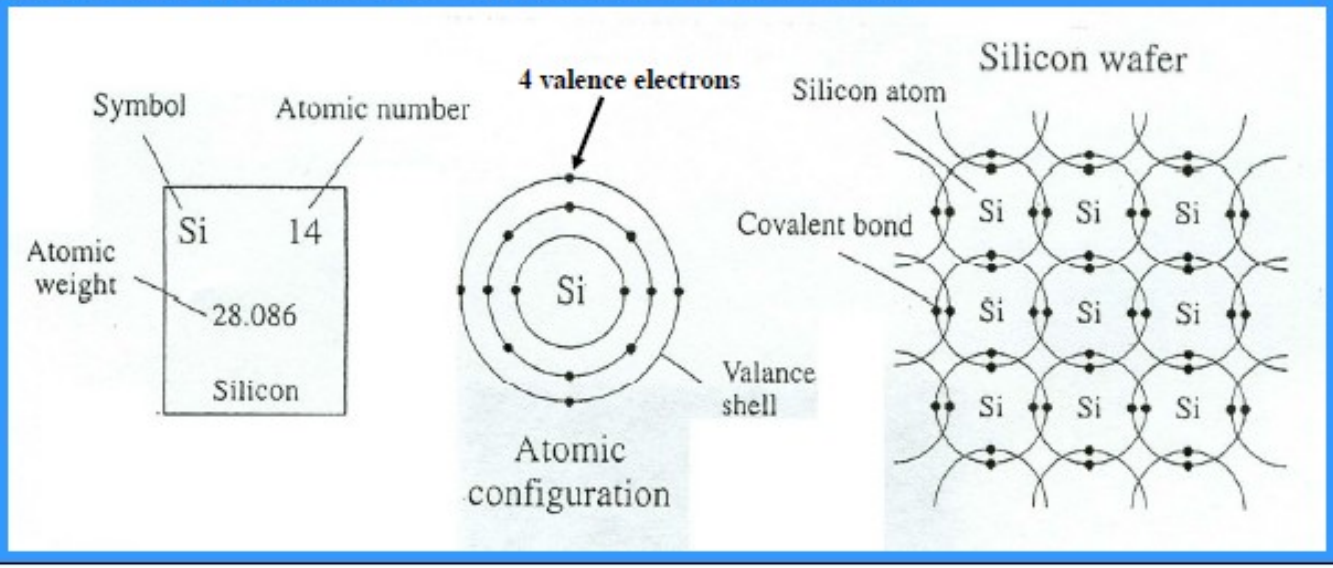

N-Type Silicon

- Pentavalent impurities such as phosphorus, arsenic, antimony, and bismuth have 5 valence electrons.
- When phosphorus impurity is added to Si, every phosphorus atom's four valence electrons are locked up in covalent bond with valence electrons of four neighboring Si atoms. However, the 5th valence electron of phosphorus atom does not find a binding electron and thus remains free to float. When a voltage is applied across the silicon-phosphorus mixture, free electrons migrate toward the positive voltage end.
- When phosphorus is added to Si to yield the above effect, we say that Si is doped with phosphorus. The resulting mixture is called N-type silicon (N: negative charge carrier silicon).
- The pentavalent impurities are referred to as donor impurities.

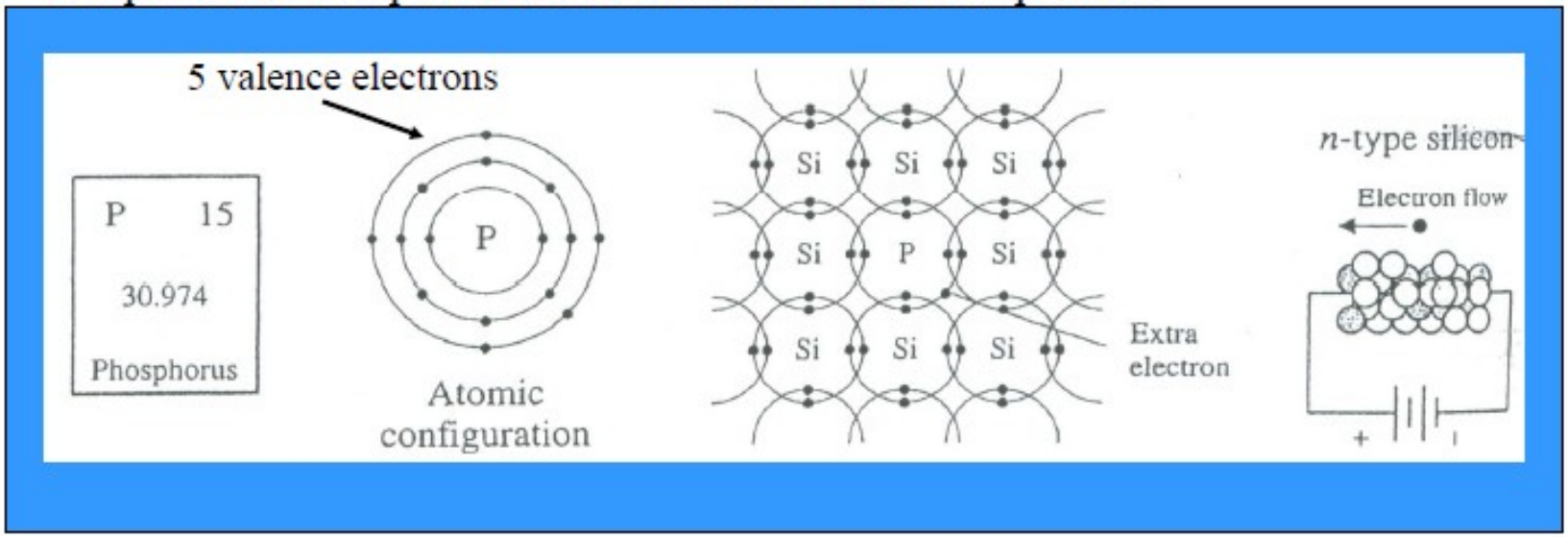

P-Type Silicon —I

- Trivalent impurities e.g., boron, aluminum, indium, and gallium have 3 valence electrons.
- When boron is added to Si, every boron atom's three valence electrons are locked up in covalent bond with valence electrons of three neighboring Si atoms. However, a vacant spot "hole" is created within the covalent bond between one boron atom and a neighboring Si atom. The holes are considered to be positive charge carriers. When a voltage is applied across the silicon-boron mixture, a hole moves toward the negative voltage end while a neighboring electron fills in its place.
- When boron is added to Si to yield the above effect, we say that Si is doped with boron. The resulting mixture is called P-type silicon (P: positive charge carrier silicon).
- The trivalent impurities are referred to as acceptor impurities.

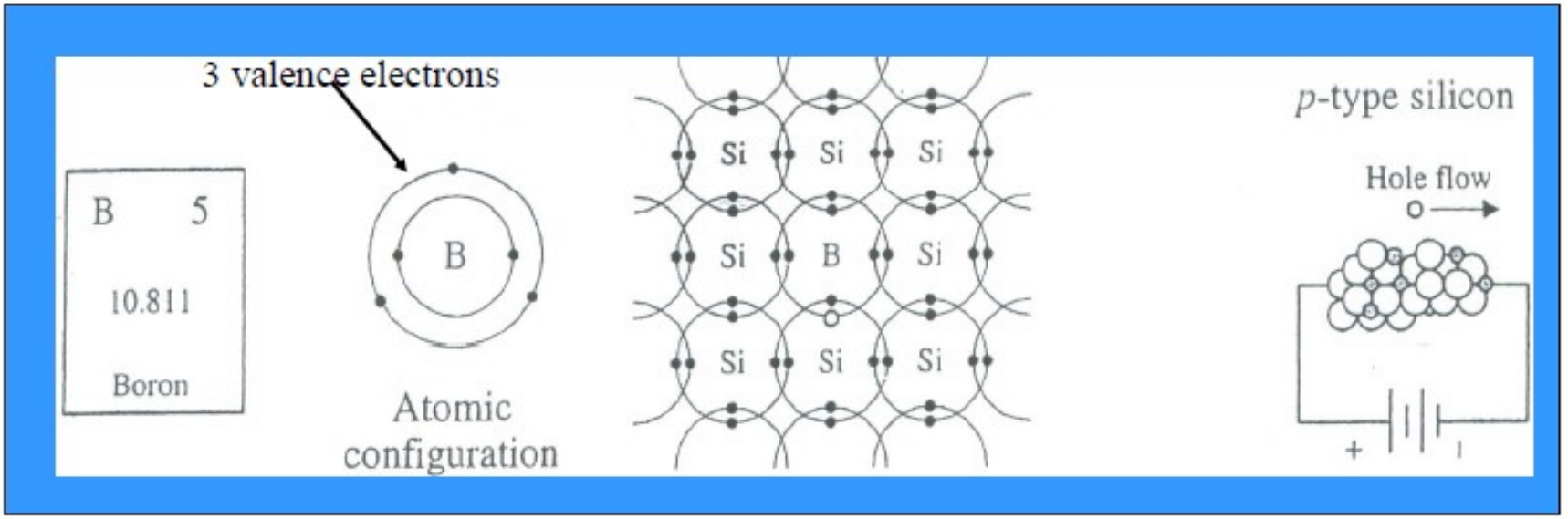

P-Type Silicon —II

- The hole of boron atom points towards the negative terminal.
- The electron of neighboring silicon atom points toward positive terminal.
- The electron from neighboring silicon atom falls into the boron atom filling the hole in boron atom and creating a "new" hole in the silicon atom.
- It appears as though a hole moves toward the negative terminal!

Diode

- A diode is a 2 lead semiconductor that acts as a one way gate to electron flow.
  - Diode allows current to pass in only one direction.
- A pn-junction diode is formed by joining together n-type and p-type silicon.
- In practice, as the n-type Si crystal is being grown, the process is abruptly altered to grow p-type Si crystal. Finally, a glass or plastic coating is placed around the joined crystal.
- The p-side is called anode and the n-side is called cathode.
- When the anode and cathode of a pn-junction diode are connected to external voltage such that the potential at anode is higher than the potential at cathode, the diode is said to be forward biased.
  - In a forward-biased diode current is allowed to flow through the device.
- When potential at anode is smaller than the potential at cathode, the diode is said to be reverse biased. In a reverse-biased diode current is blocked.

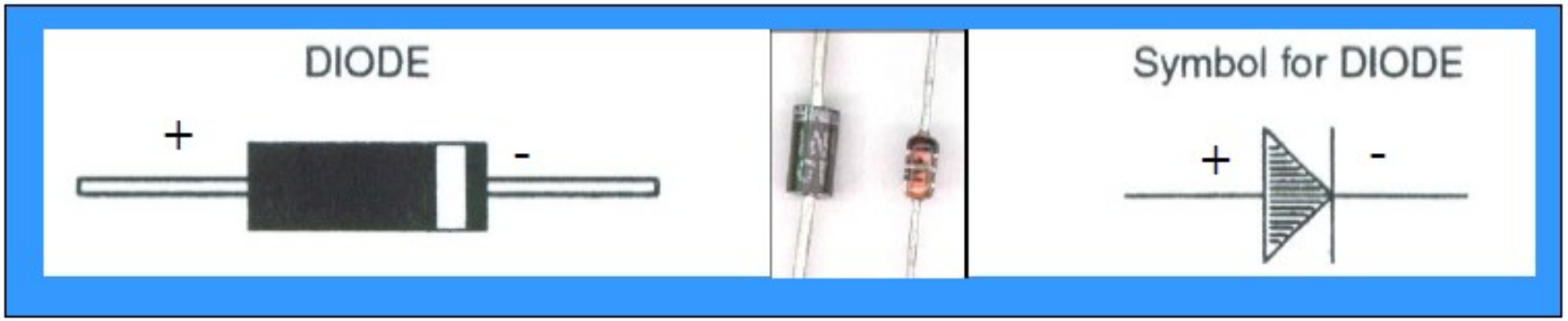

Water Analogy of Diodes

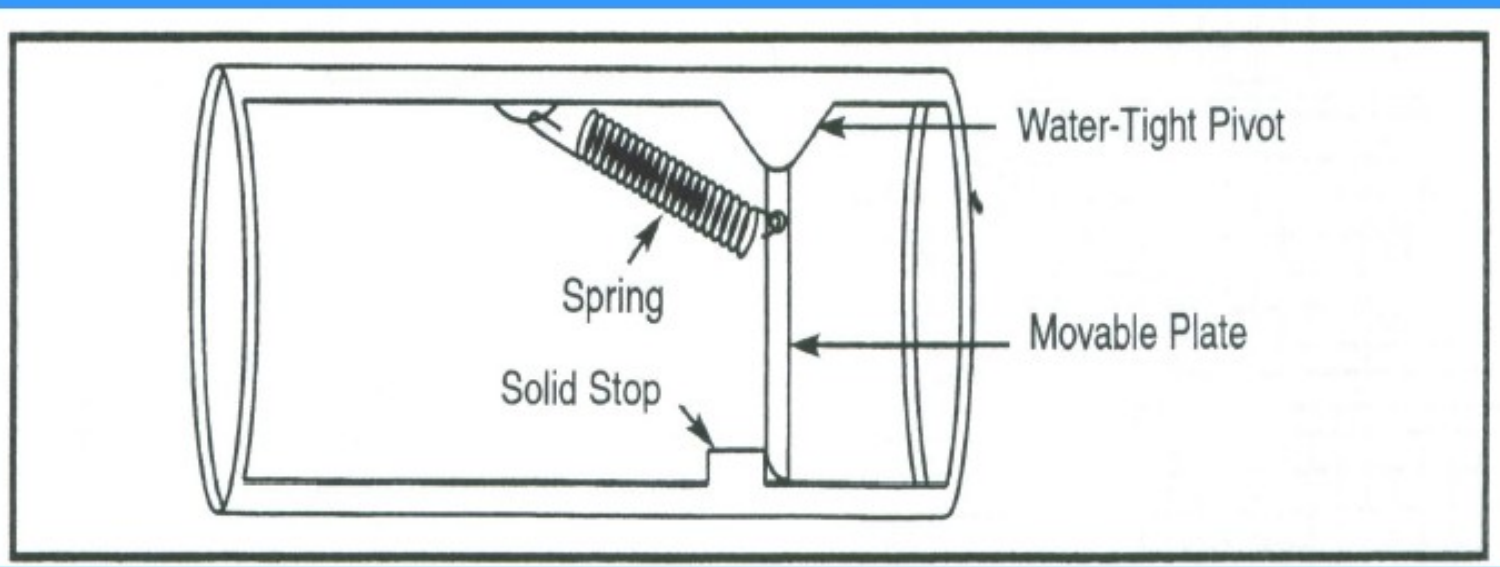

- When water pressure on left overcomes the restoring force of spring, the gate is opened and water is allowed to flow →.
- When water pressure is from right to left, the gate is pressed against the solid stop and no water is allowed to flow.
- Spring restoring force is analogous to 0.6V needed to forward bias a Si diode.

Diode: How it Works —I

- When a diode is connected to a battery as shown, electrons from the n-side and holes from the p-side are forced toward the center by the electrical field supplied by the battery. The electrons and holes combine causing the current to pass through the diode. When a diode is arranged in this way, it is said to be forward-biased.

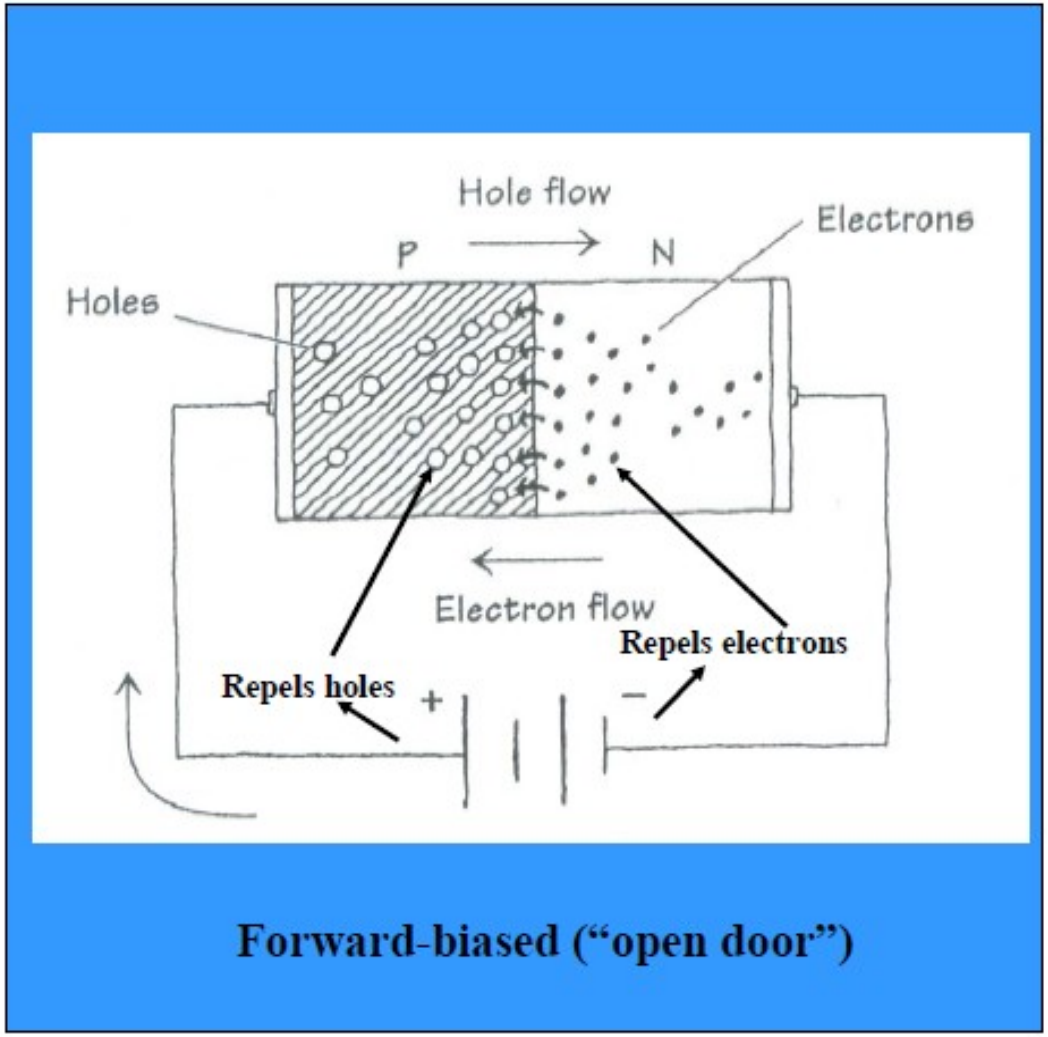

Forward-biased ("open door")

Diode: How it doesn't work

- When a diode is connected to a battery as shown, holes in the n-side are forced to the left while electrons in the p-side are forced to the right. This results in an empty zone around the pn- junction that is free of charge carries creating a ***depletion region***. This depletion region acts as an insulator preventing current from flowing through the diode. When a diode is arranged in this way, it is said to be <u>reverse-biased</u>.

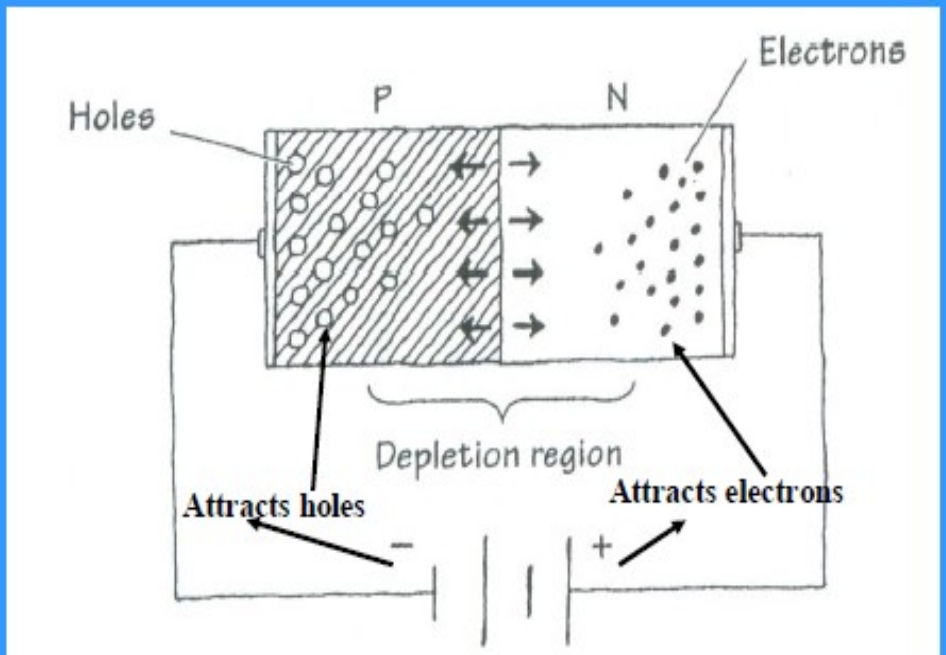

Reverse-biased ("closed door")

Diode Applications —Half Wave Rectifier

- Diode converts ac input voltage to a pulsed dc output voltage.
- Whenever the ac input becomes negative at diode's anode, the diode blocks current flow.

  ⟶ o/p voltage become zero.

- Diode introduces a 0.6V drop so o/p peak is 0.6V smaller than the i/p peak.
- The o/p frequency is same as the i/p frequency.

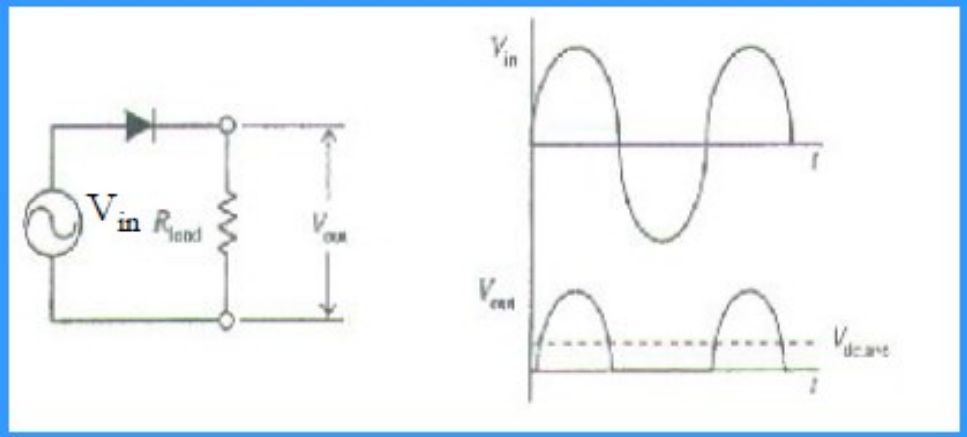

Diode Applications —Full Wave Rectifier

- A full-wave rectifier does not block negative swings in the i/p voltage, rather it transforms them into positive swings at the o/p.
- To gain an understanding of device operation, follow current flow through pairs of diodes in the bridge circuit.
- It is easily seen that one pair (D3-R_{out}-D2) allows current flow during the +ve half cycle of V_{in} while the other pair (D4-R_{out}-D1) allows current flow during the -ve half cycle of V_{in}.
  - → o/p voltage peak is 1.2V below the i/p voltage peak.
  - The o/p frequency is twice the i/p frequency.

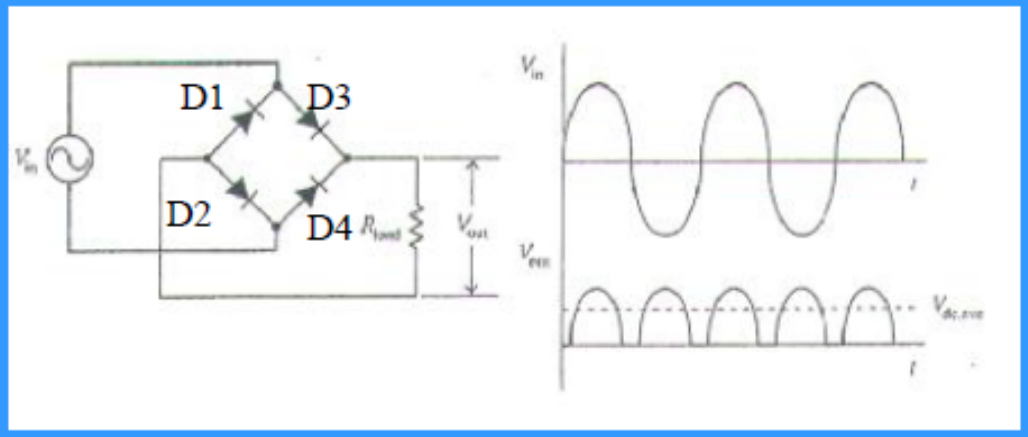

Transistor

- A three lead semiconductor device that acts as:
  - an electrically controlled switch, or
  - a current amplifier.
- Transistor is analogous to a faucet.
  - Turning faucet's control knob alters the flow rate of water coming out from the faucet.
  - A small voltage/current applied at transistor's control lead controls a larger current flow through its other two leads.

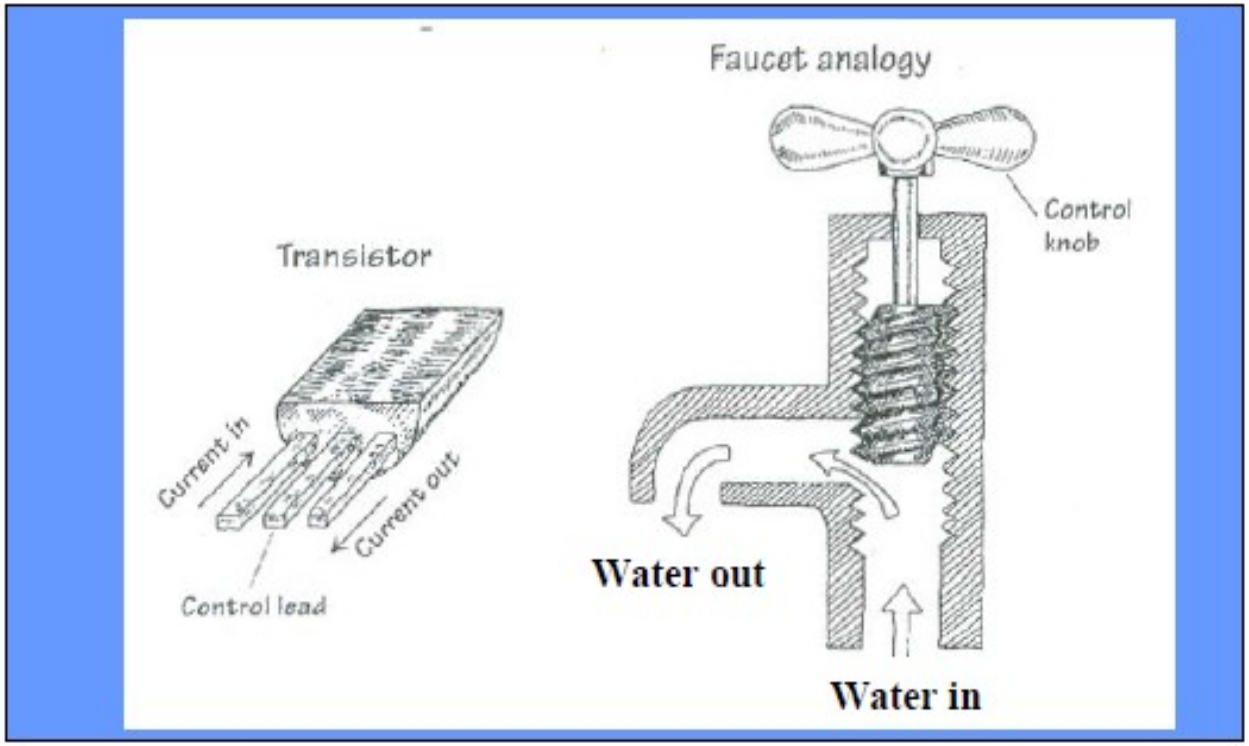

Transistor Types: BJT, JFET, and MOSFET

- **B**ipolar **J**unction **T**ransistor **(BJT)**
  - NPN and PNP
- **J**unction **F**ield **E**ffect **T**ransistor **(JFET)**
  - N-channel and P-channel
- **M**etal **O**xide **S**emiconductor **FET (MOSFET)**
  - Depletion type (n- and p-channel) and enhancement type (n- and p-channel)



BJT



JFET



MOSFET

BJT Types

- NPN and PNP.
  - NPN: a small input current and a positive voltage applied @ its base (with $V_B > V_E$) allows a large current to flow from collector to emitter.
  - PNP: a small output current and a negative voltage @ its base (with $V_B < V_E$) allows a much larger current to flow from emitter to collector.

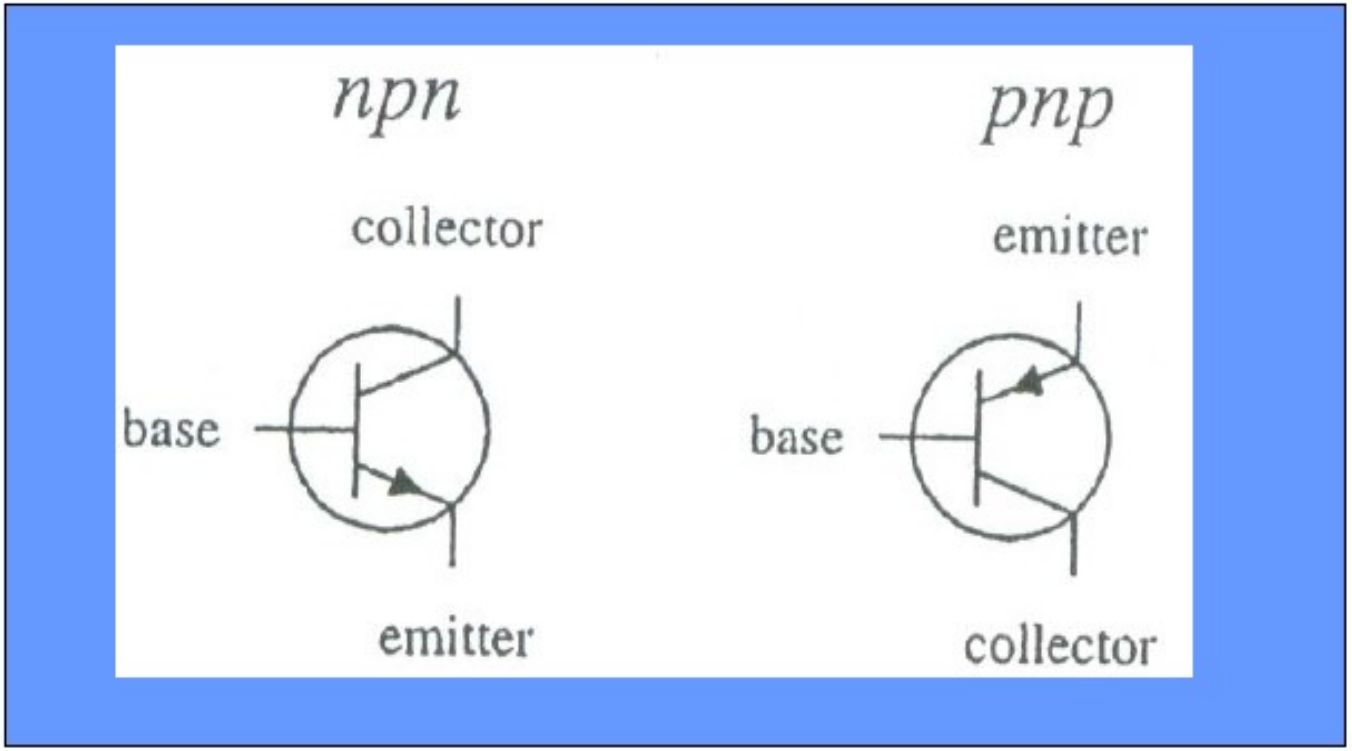

NPN BJT: How it works — I

- When no voltage is applied at transistor's base, electrons in the emitter are prevented from passing to the collector side because of the pn junction.
- If a negative voltage is applied to the base, things get even worse as the pn junction between the base and emitter becomes reverse-biased resulting in the formation of a depletion region that prevents current flow.

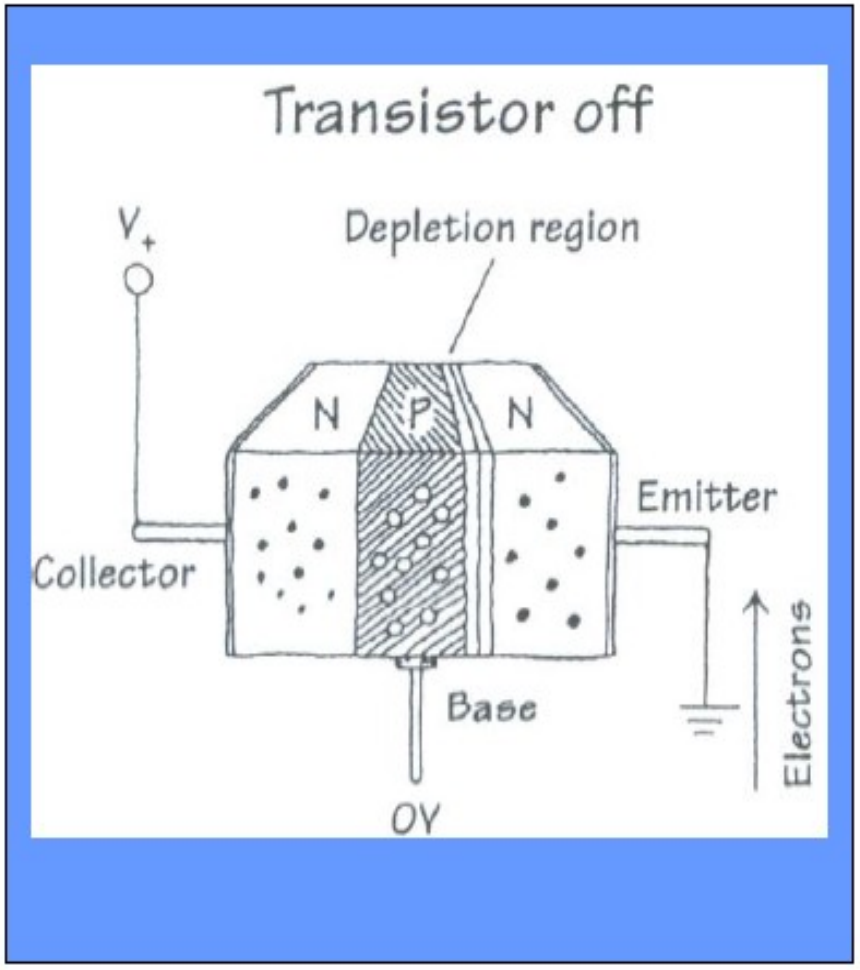

NPN BJT: How it works — II

- If a positive voltage (>0.6V) is applied to the base of an npn transistor, the pn junction between the base and emitter becomes forward-biased. During forward bias, escaping electrons are drawn to the positive base.
- Some electrons exit through the base, but because the p-type base is so thin, the onslaught of electrons that leave the emitter get close enough to the collector side that they begin jumping into the collector. Increasing the base voltage increases the emitter-to-collector electron flow.
- Recall, positive current flow is in the direction opposite to the electron flow →current flows from collector to emitter.

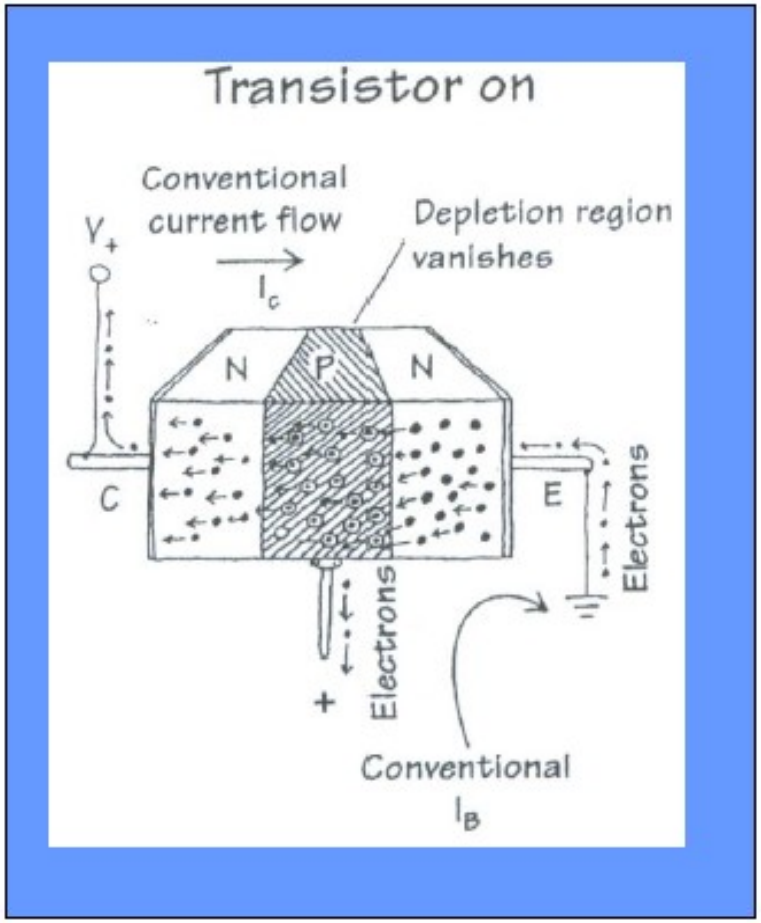

BJT Water Analogy

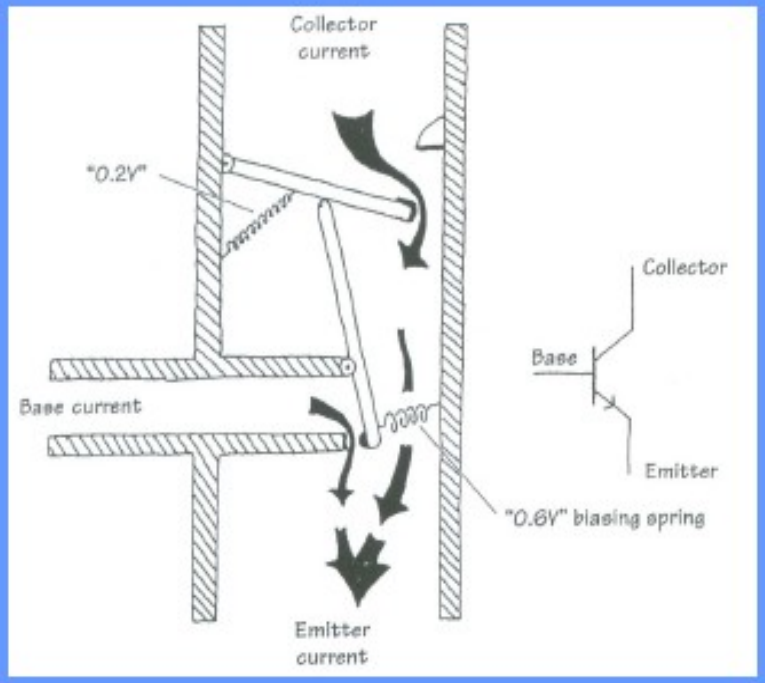

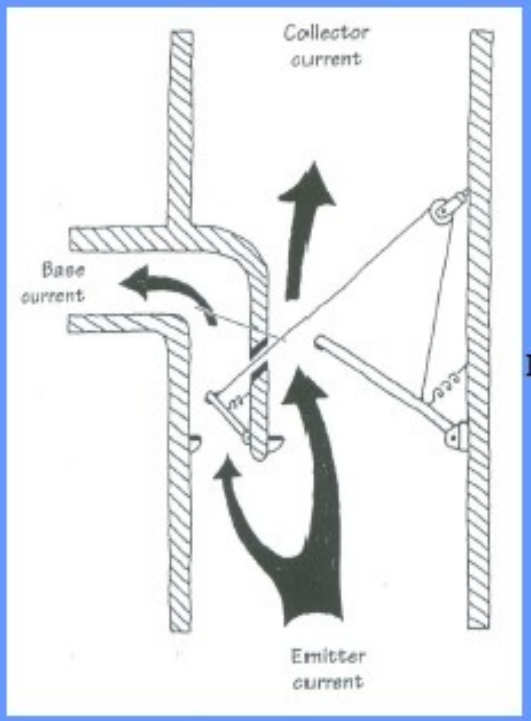

NPN ($V_B > V_E$)

PNP ($V_B < V_E$)

MOSFET

- Metal oxide semiconductor FET.
- Similar to JFET.
- A metal oxide insulator is placed @ the gate to obtain a high input impedance @ the gate
  - gate input impedance approx. $10^{14}\Omega$.
- Use of insulator as described above yields a low gate-to-channel capacitance.
  - If too much static electricity builds up on the gate, then the MOSFET may be damaged.



JFET

- Junction field effect transistors like BJTs are three lead semiconductor devices.
- JFETs are used as:
  - electrically controlled switches,
  - current amplifiers, and
  - voltage-controlled resistors.
- Unlike BJTs, JFETs do not require a bias current and are controlled by using only a voltage.
- JFETs are normally on when $V_G - V_S = 0$.
- When $V_G - V_S \neq 0$, then JFETs become resistive to current flow through the drain-source pair $\rightarrow$ "JFETs are depletion devices."

Optoelectronics

- In optoelectronics we deal with 2 types of electronic devices.
- Light emitting electronic devices: ones that generate electromagnetic energy under the action of electrical field. Example: light emitting diodes (visible and infrared light).
- Light detecting devices: ones that transform electromagnetic energy input into electrical current/voltage. Examples: photoresistors, photodiodes, phototransistors, etc.



Light emitting diodes

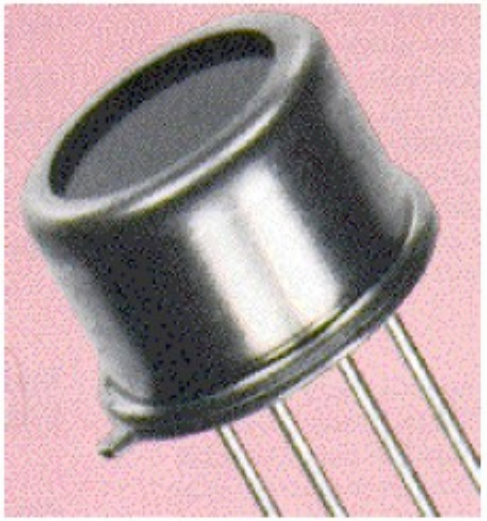

Infrared detector

How LED Works

- The light-emitting section of an LED is made by joining n-type and p-type semiconductors together to form a pn junction.
- When the pn junction is forward-biased, electrons in the n side are excited across the pn junction and into the p side, where they combine with holes.
- As the electrons combine with the holes, photons are emitted.
- The pn-junction section of an LED is encased in an epoxy shell that is doped with light scattering particles to diffuse light and make the LED appear brighter.
- Often a reflector placed beneath the semiconductor is used to direct the light upward.

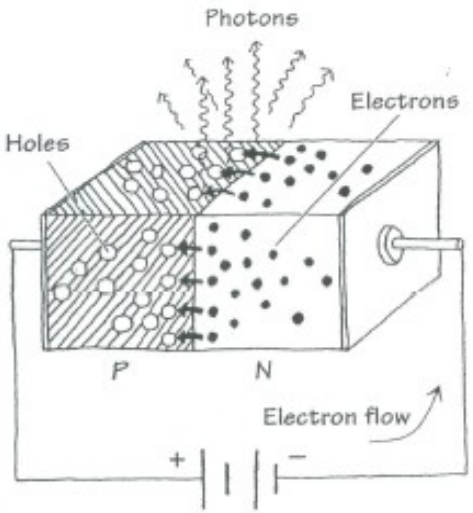

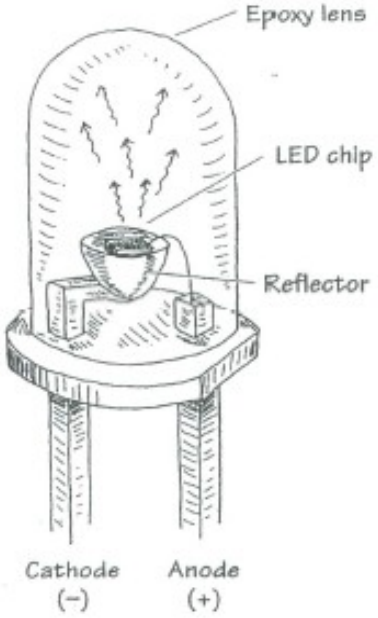

LED 101— I

- 2 lead semiconductor device.
- Light emitting PN-junction diode.
  - Visible or infrared light.
- Has polarity.
- Recall diodes act as a one way gate to current flow.
  - A forward-biased PN-junction diode allows current flow from anode to cathode.
- An LED conducts and emits light when its anode is made more positive (approx. 1.4V) than its cathode.
  - With reverse polarity, LED stops conducting and emitting light.

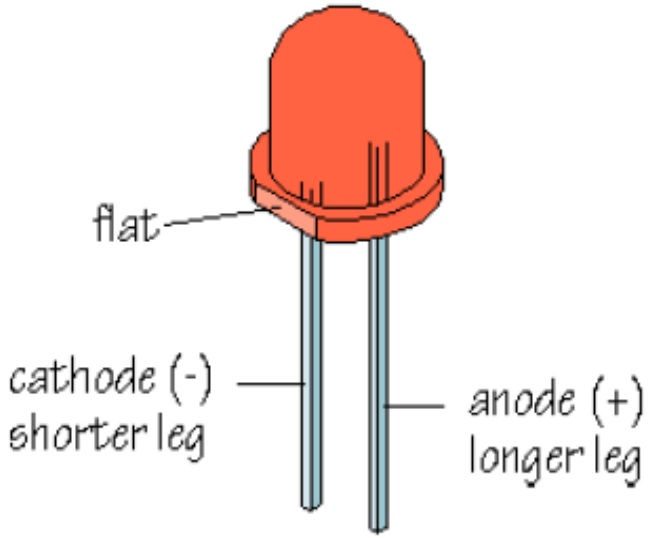

Light-Emitting Diodes (LEDs)

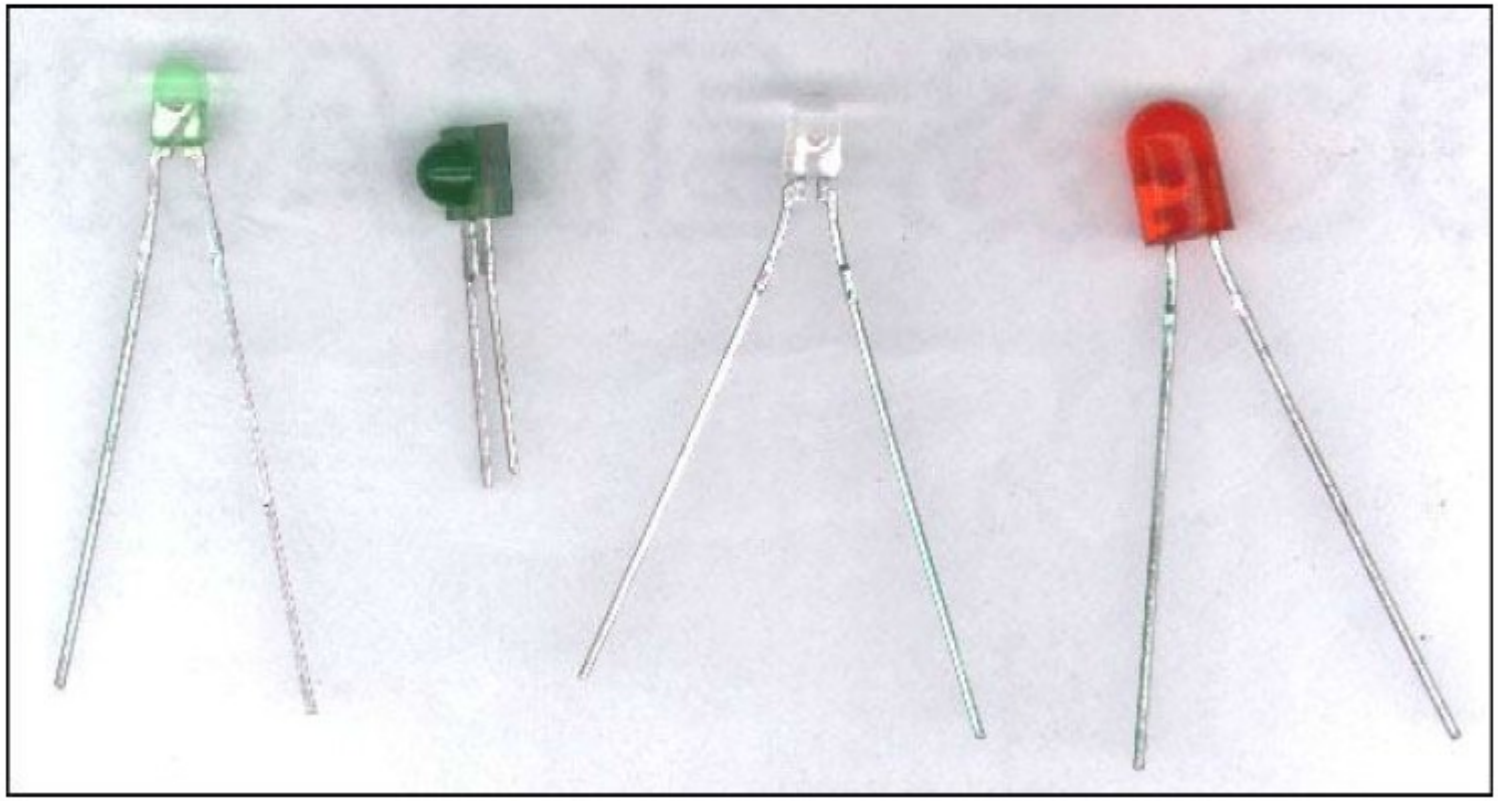

RESISTANCE:

- Resistance (R) of an opposition to the flow of electrical current.
- **R= V / I**
- Symbol for Resistor

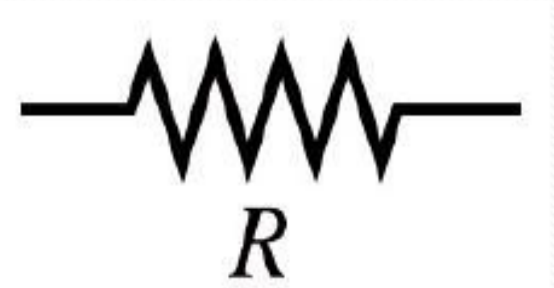

- **Unit: Ohm (Ω)**

Resistor Color Code

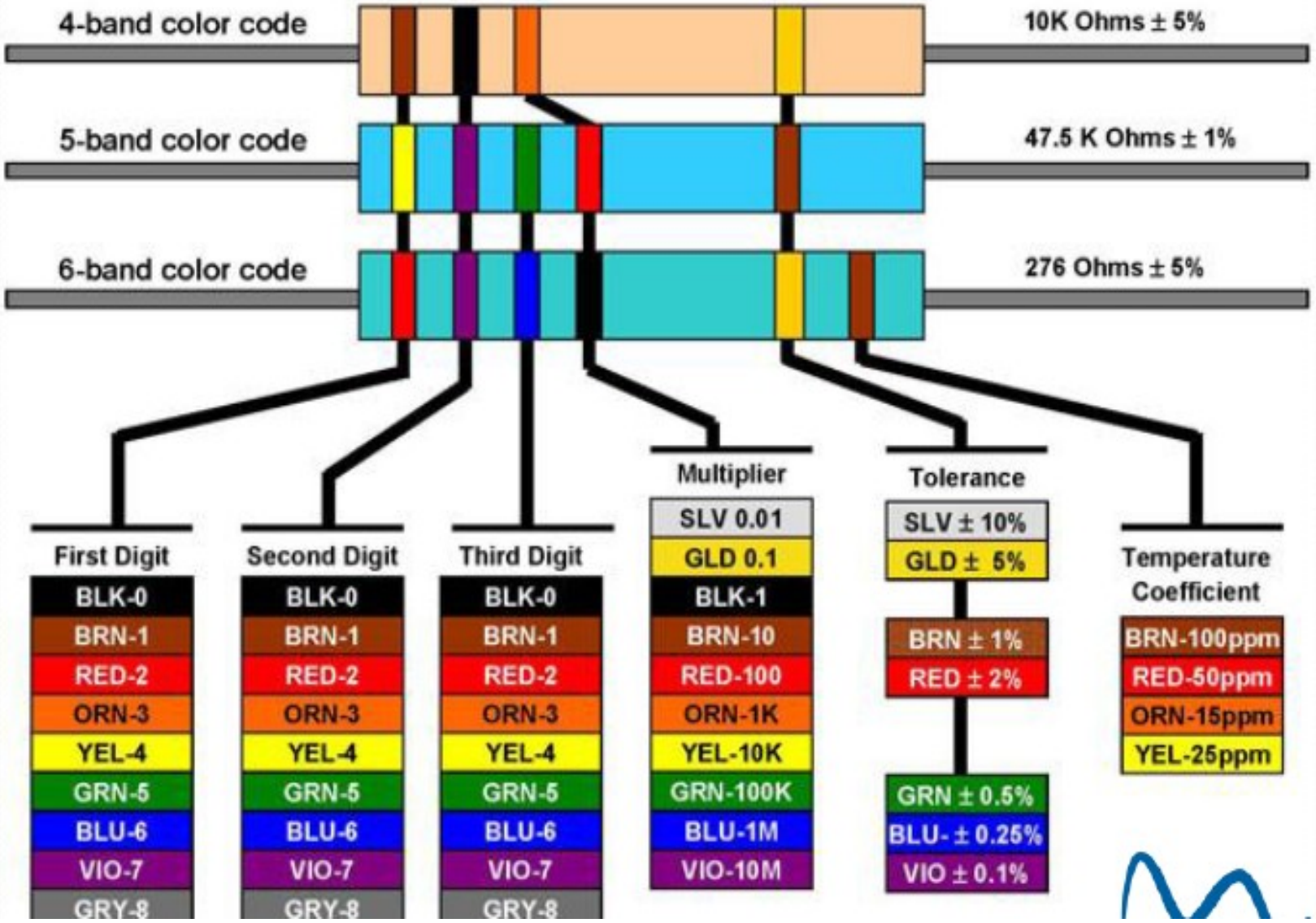

INDUCTANCE:

- An inductor (L) is a two terminal element consisting of a winding of N turns capable of storing energy in the form of a magnetic field.

- Symbol for Inductor



$$L = \frac{\mu_0 K N^2 A}{l}$$

- **Unit: Henry (H)**

CAPACITANCE:

- Capacitance (C) is the ability of a material to store charge in the form of separated charge or an electric field. It is the ratio of charge stored to voltage difference between two plates.

- Symbol for Capacitor 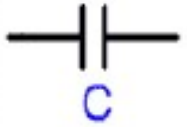

$$C = \frac{Q}{V} = \frac{Coloumb}{Volt} = Farad$$

- **Unit: Farad (F)**

Basic DC Motor Circuits

Simplest DC Motor Circuit

Connect the motor to a DC power supply

Switch open

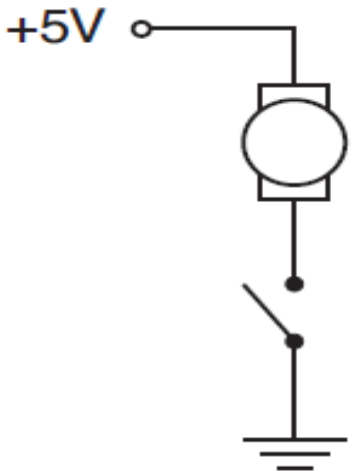

Switch closed

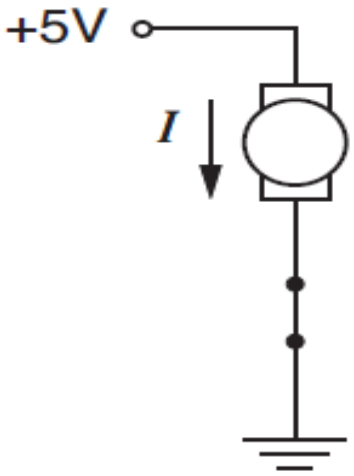

Current continues after switch is opened

Opening the switch does not immediately stop current in the motor windings.

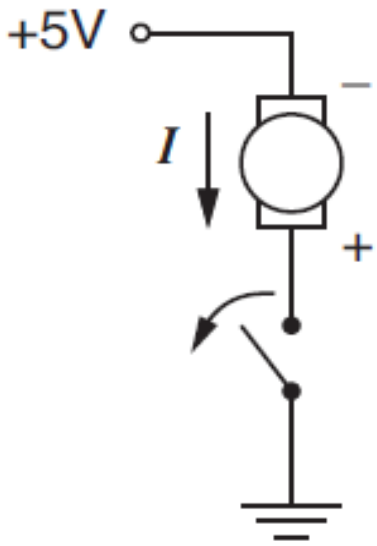

Inductive behavior of the motor causes current to continue to flow when the switch is opened suddenly.

Charge builds up on what was the negative terminal of the motor.

Reverse current

Charge build-up can cause damage

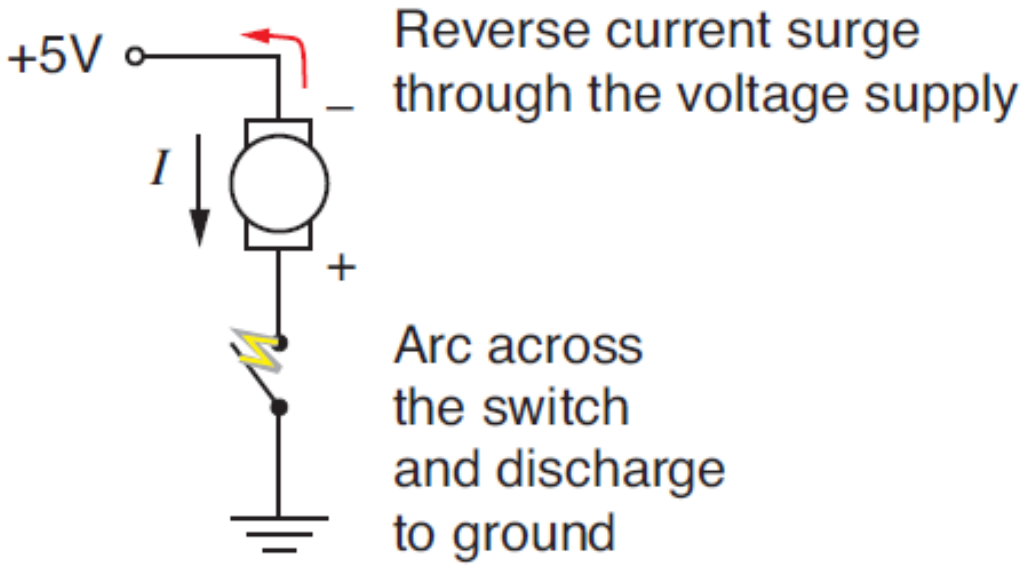

Motor Model

Simple model of a DC motor:

- Windings have inductance and resistance
- Inductor stores electrical energy in the windings
- We need to provide a way to safely dissipate electrical energy when the switch is opened

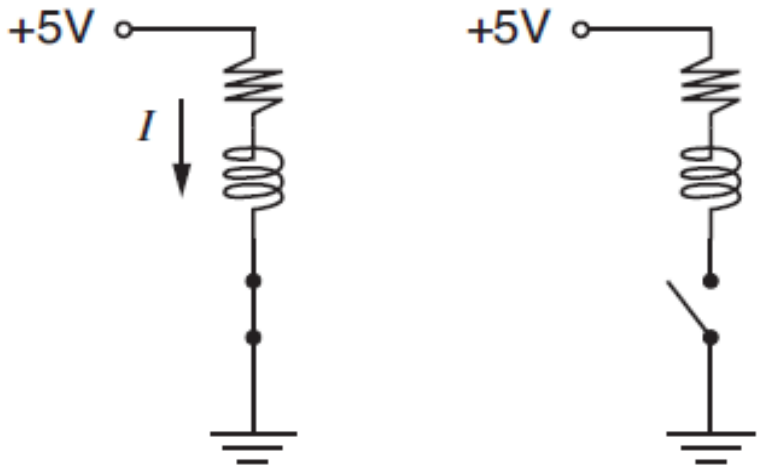

Flyback diode or snubber diode

Adding a diode in parallel with the motor provides a path for dissipation of stored energy when the switch is opened

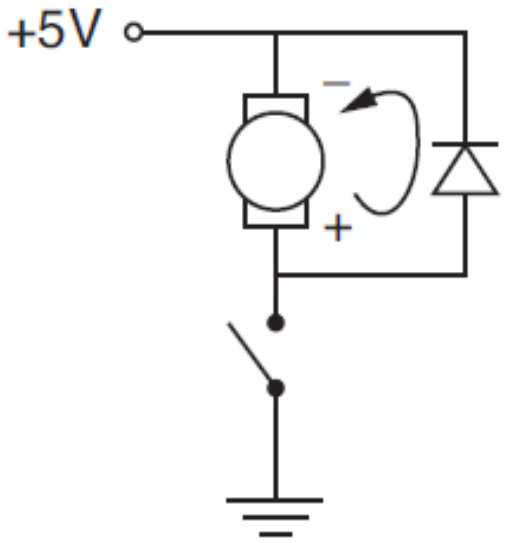

The flyback diode allows charge to dissipate without arcing across the switch, or without flowing back to ground through the +5V voltage supply.

Pulse-width modulation (PWM) for DC motor speed control

Controlling DC Motor Speed

The voltage supplied to a DC motor controls its speed

Arduino cannot supply variable DC output

- Arduino lacks a true analog output
- Use Pulse-width modulation (PWM) to simulate a variable DC supply voltage
- PWM is a common technique for supplying variable power levels to "slow" electrical devices such as resistive loads, LEDs, and DC motors
- Arduino Uno has 6 PWM pins: Digital I/O pins 3, 5, 6, 9,10, and 11

Arduno Uno has 6 PWM pins

Look for the ~ prefix on the digital pin label, e.g. ~3

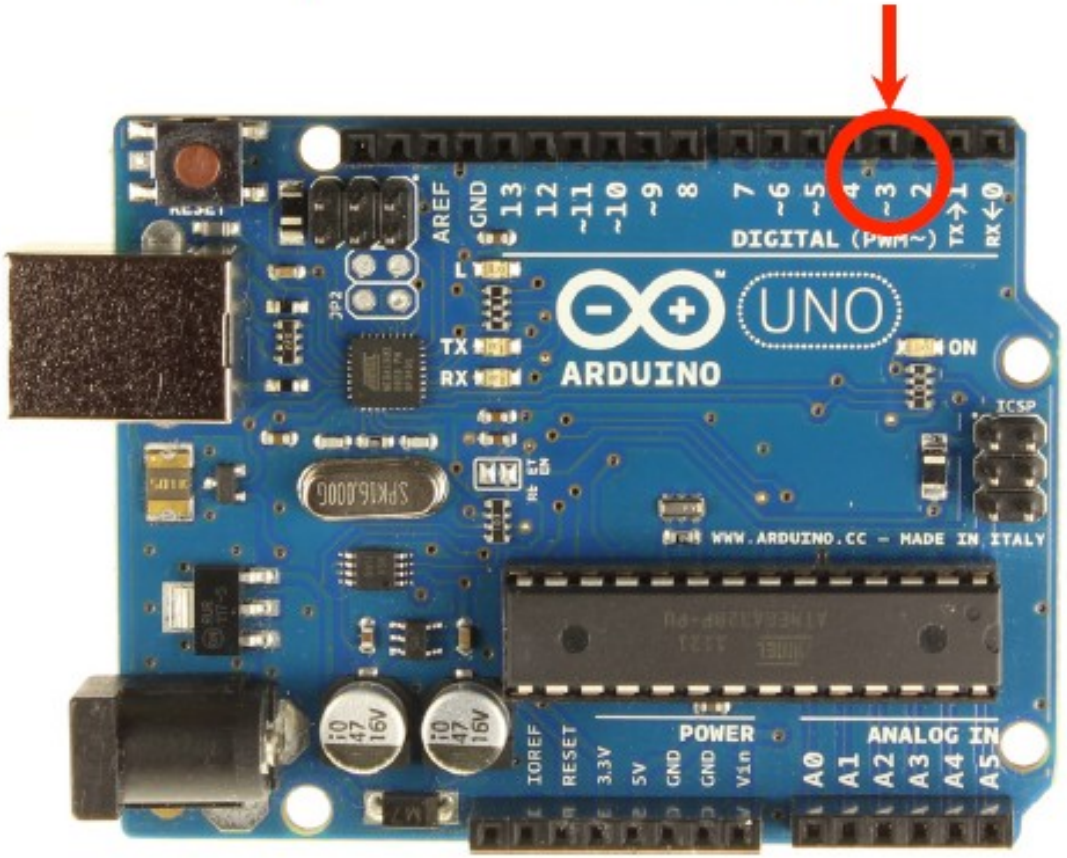

/TL: DC Motor

PWM: Pulsed with modulation

PWM simulates DC voltage control for *slow* loads



The effective voltage is $V_{\text{eff}} = V_s \frac{\tau_o}{\tau_c}$

$\frac{\tau_o}{\tau_c}$ is called the duty cycle

Arduino PWM commands

Configure the output pin:

```
PWM_pin = ... ;          //  one of 3, 5, 6, 9, 10, 11

void setup() {
  pinMode( PWM_pin, OUTPUT);
}
```

Set the duty cycle

```
void loop() {
  int duty_cycle = 150;     //  between 0 and 255

  analogWrite( PWM_pin, duty_cycle );
}
```

The duty cycle is an 8 bit value:

$0 \leq$ `duty_cycle` ≤ 255

Replace the Switch with a Transistor

A transistor allows on/off control to be automated and it allows switching of more current than an Arduino digital pin can supply.

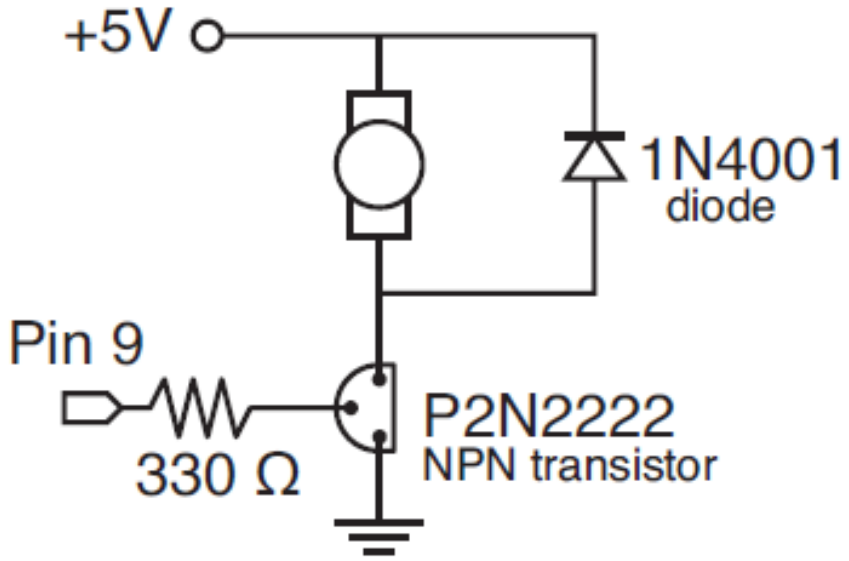

Pin 9 or another PWM pin drives the transistor base

Alternative locations for the transistor

Moving the transistor (and any switch) between the power supply and the motor adds a bit of safety by tying the motor to ground when the system is idle

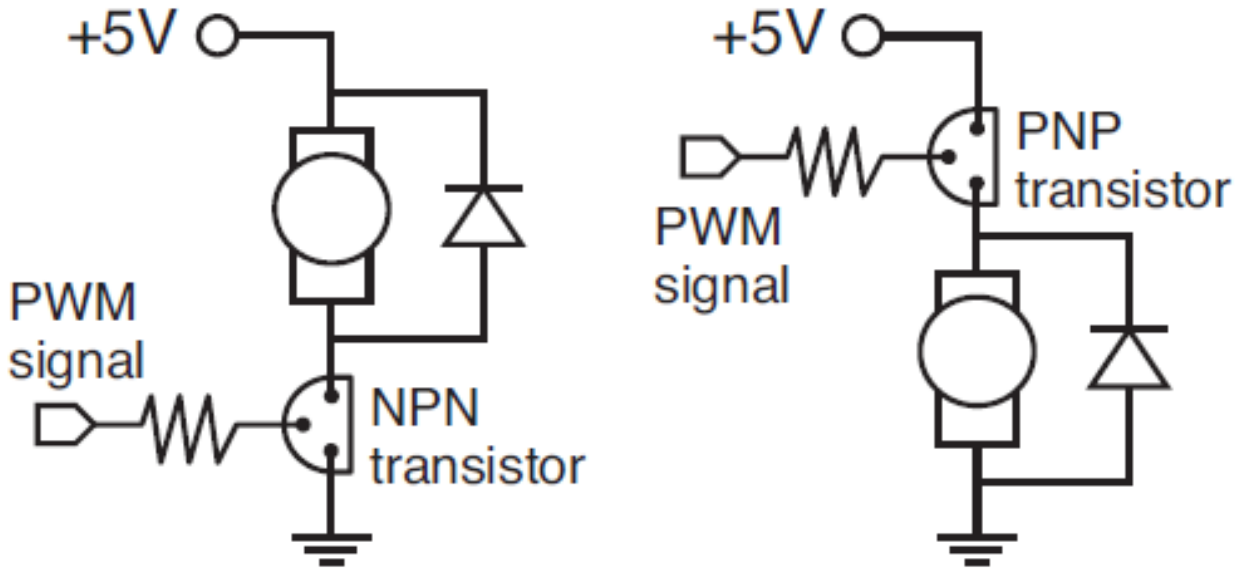

Diode and transistor orientation

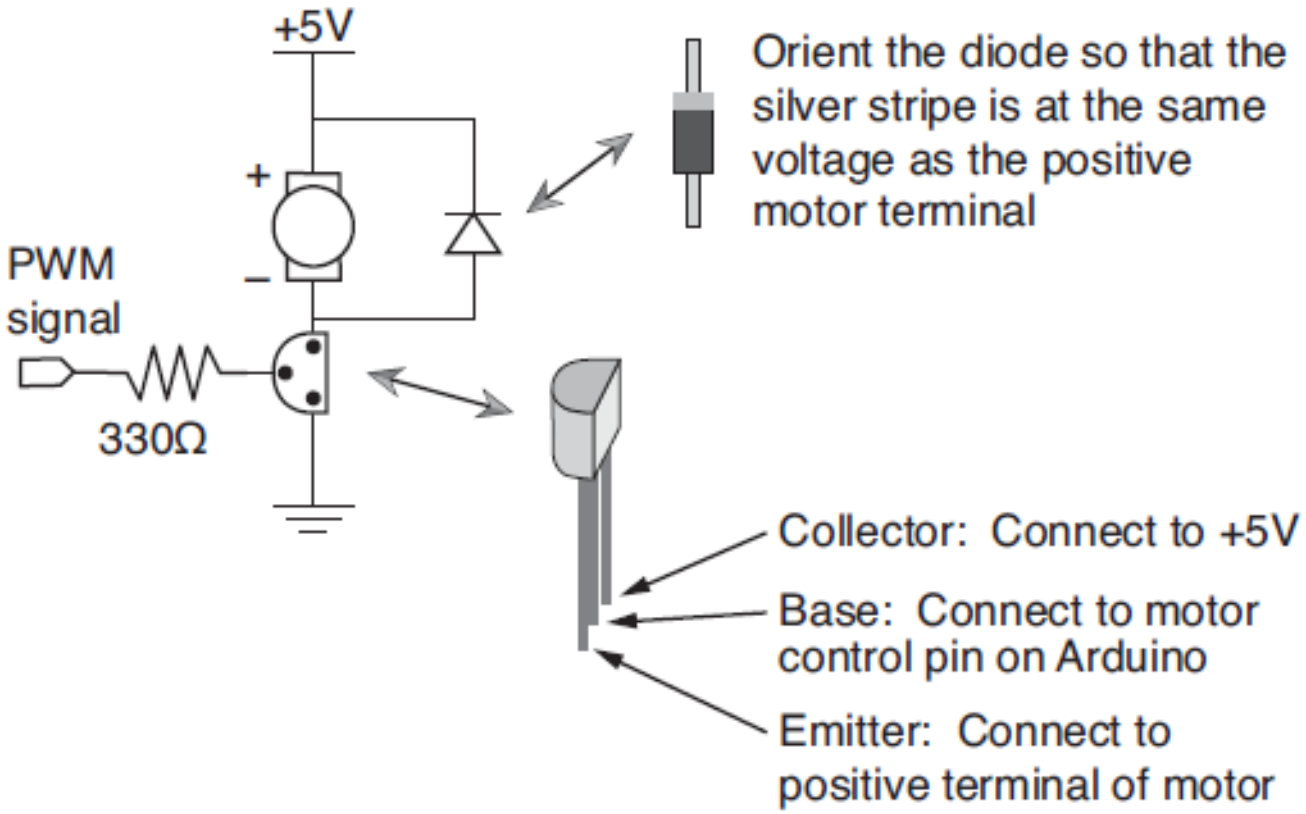

PWM signal is connected to transistor base

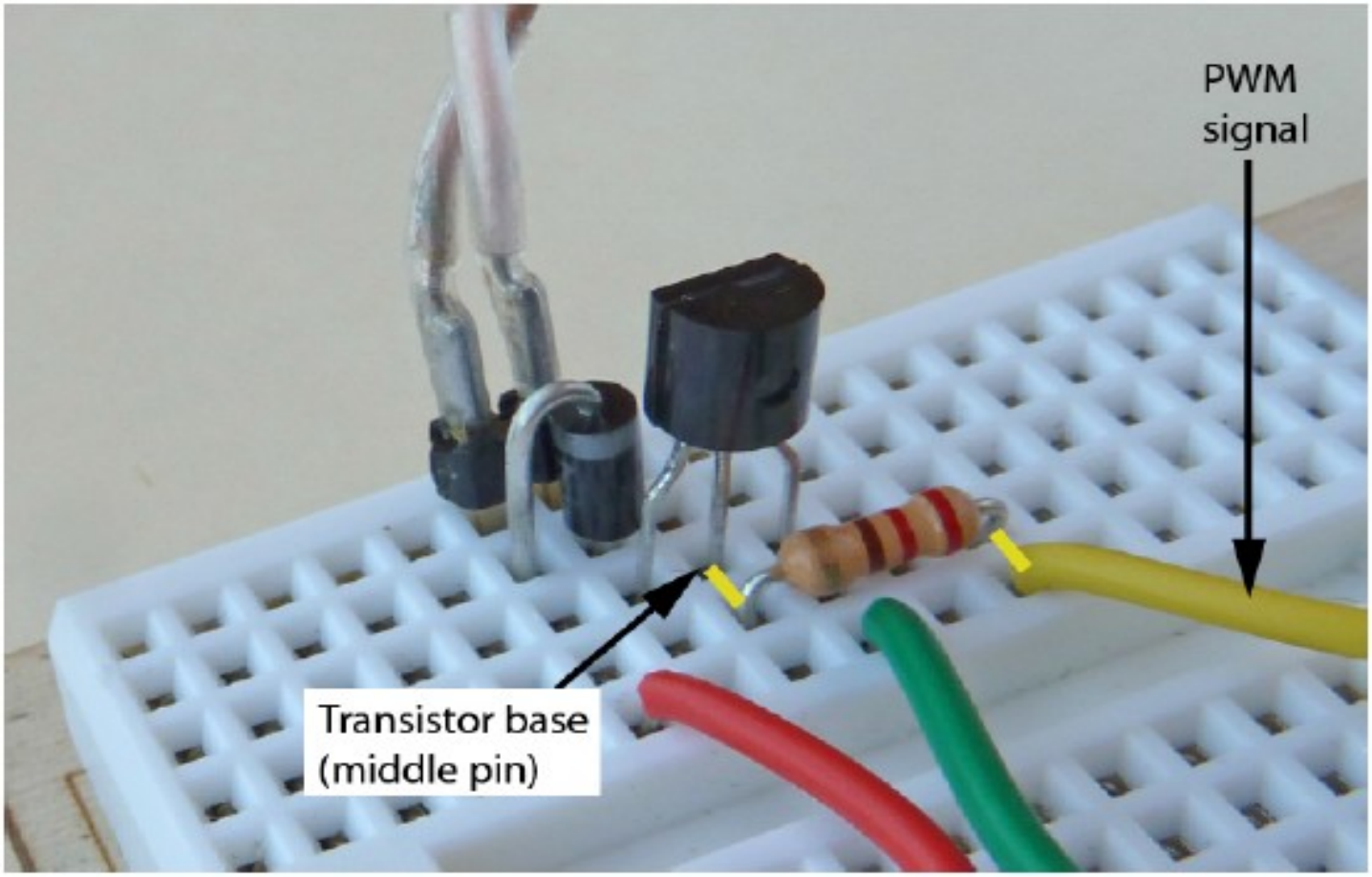

Arduino program to spin the DC Motor

Code is in spin_DC_motor.ino

```
//  spin_DC_motor.ino   Use PWM to control DC motor speed

int motorPin = 3;    // Pin 3 has PWM, connected it to the DC motor

void setup() {
  pinMode(motorPin, OUTPUT);      // Set motor pin to output mode
}

void loop()  {
   analogWrite(motorPin, 150);    // Motor at 150/255 of full speed
   delay(1000);
   analogWrite(motorPin, 250);    // Motor at 250/255 of full speed
   delay(1000);
}
```

MOTOR CONTROLING part II: POLE CHANGING

- #include <AFMotor.h>
- AF_DCMotor motor(2, MOTOR12_64KHZ);
- void setup() {
- motor.setSpeed(200); // set the speed to 200/255
- }
- void loop() {

- motor.run(FORWARD); // turn it on going forward
- delay(1000);

- motor.run(BACKWARD); // the other way
- delay(1000);

- motor.run(RELEASE); // stopped
- delay(1000);
- }



L293D
Dual H-bridge is used to change the poles of the motor