UNIVERSITY OF GONDAR

INSTITUTEOF TECHNOLOGY

DEPARTMENT OF CIVIL ENGINEEREING



RAILWAY & TUNNEL CONSTRUCTION
(CoTM 4203)

Chapter Three: RAILWAY TRACK STRUCTURES

By: Rekik Desta (Msc.)



Contents

1. Component and function of track structure
2. Rail support: sleepers/ties, ballast
3. Rail fastening system

Components of track structure

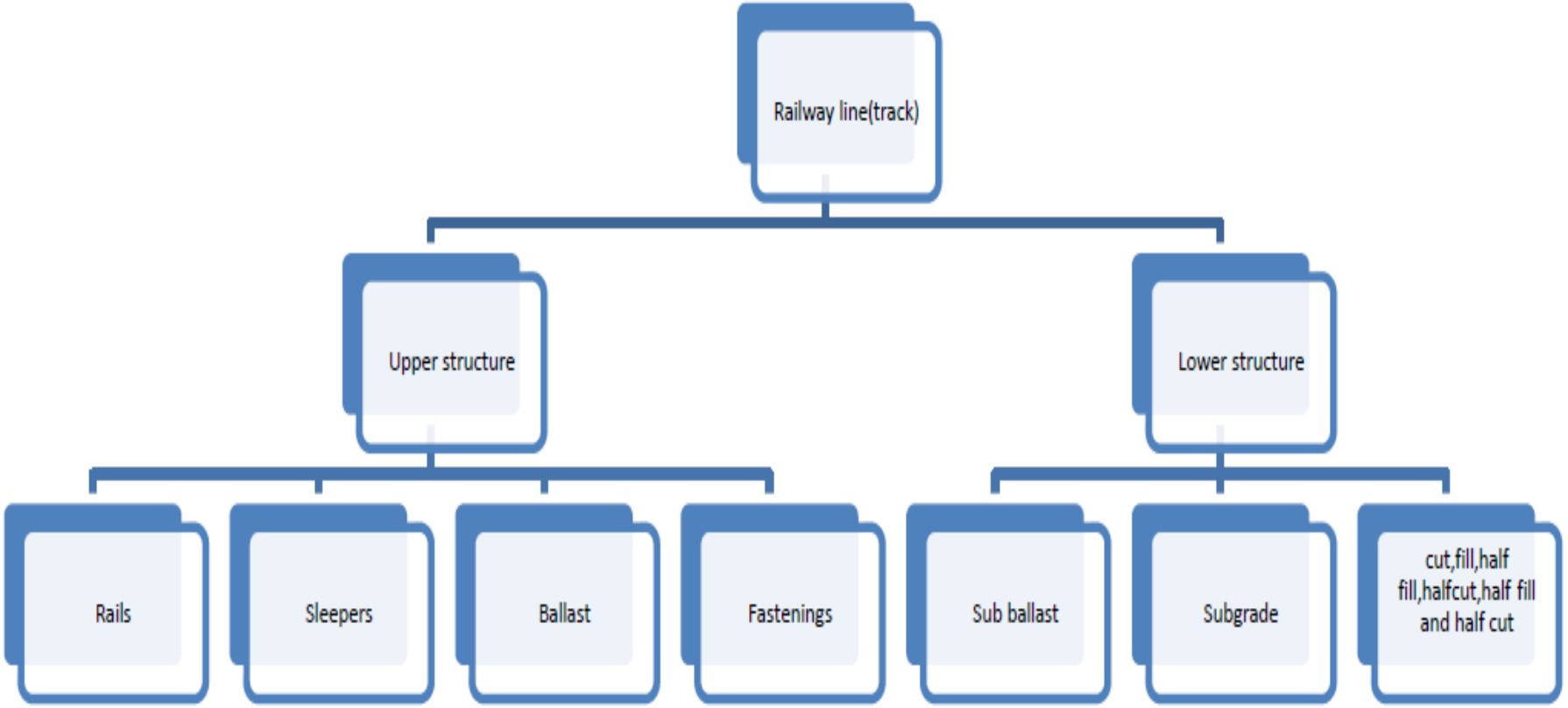

3.1 Component and function of track structure

- In road transport, **where vehicles merely run on a prepared surface,** rail vehicles are also directionally guided by the tracks they run on.

- Track usually consists of *steel rails* installed on *sleepers/ties* and *ballast*, on which the rolling stock, usually fitted with metal wheels, moves.

Cont…

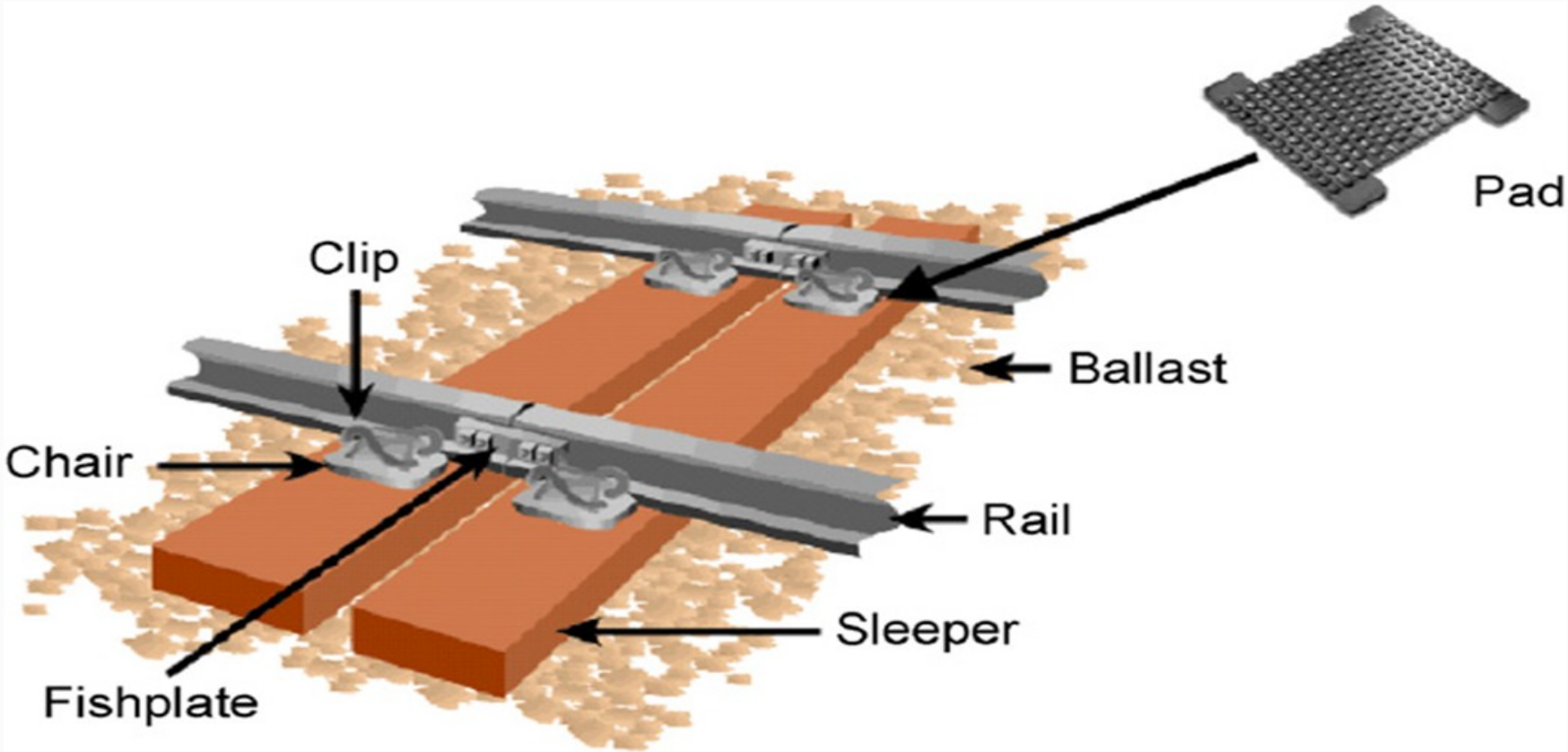

Construction of railway

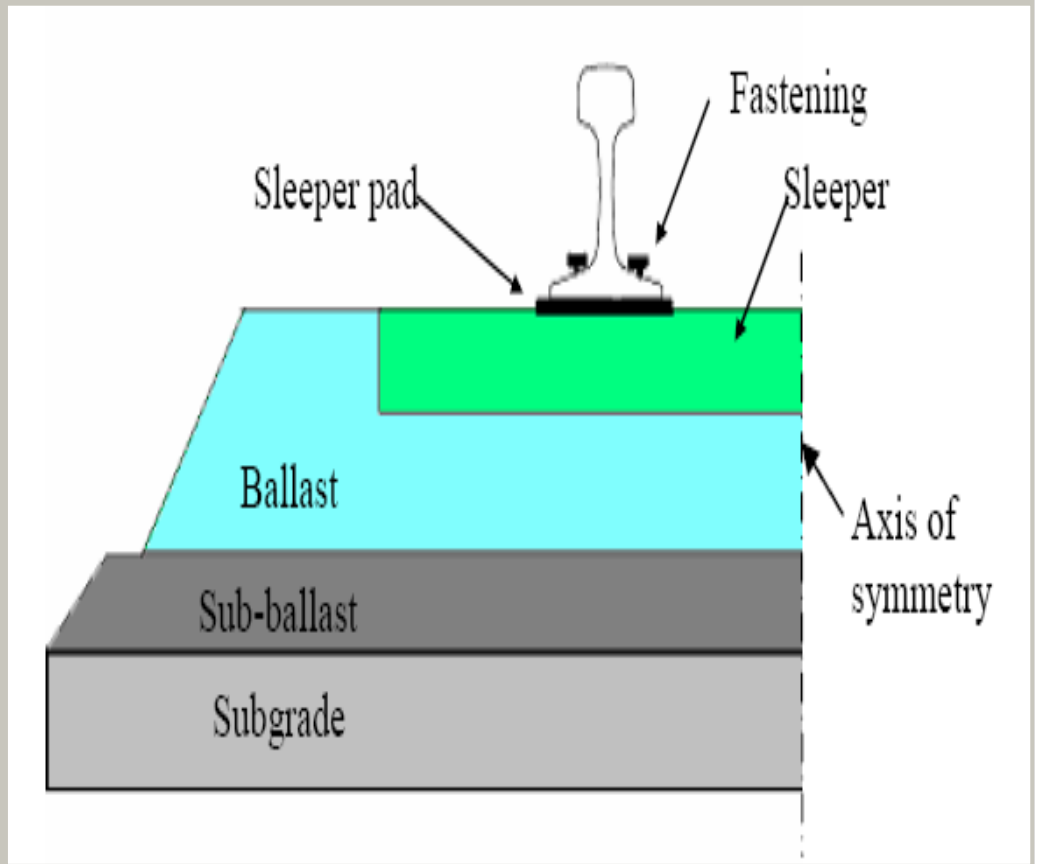

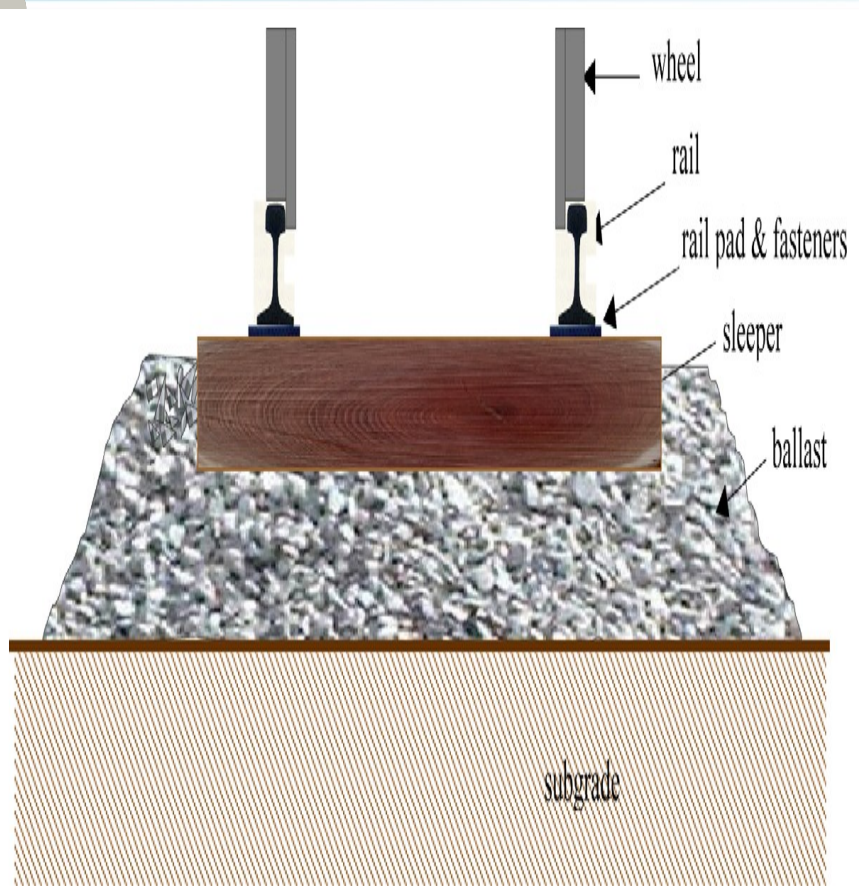

Structural Elements of track

The Principle:-

-*Components do not function independently!*

-Each component layer must protect the one below.

Main railway components(Elements)

1. *Rail*
2. *Rail pad/plate*
3. *Sleeper*
4. *Ballast*

Upper structures

-Rail,
-Fastens,
-Sleepers and
-Ballast

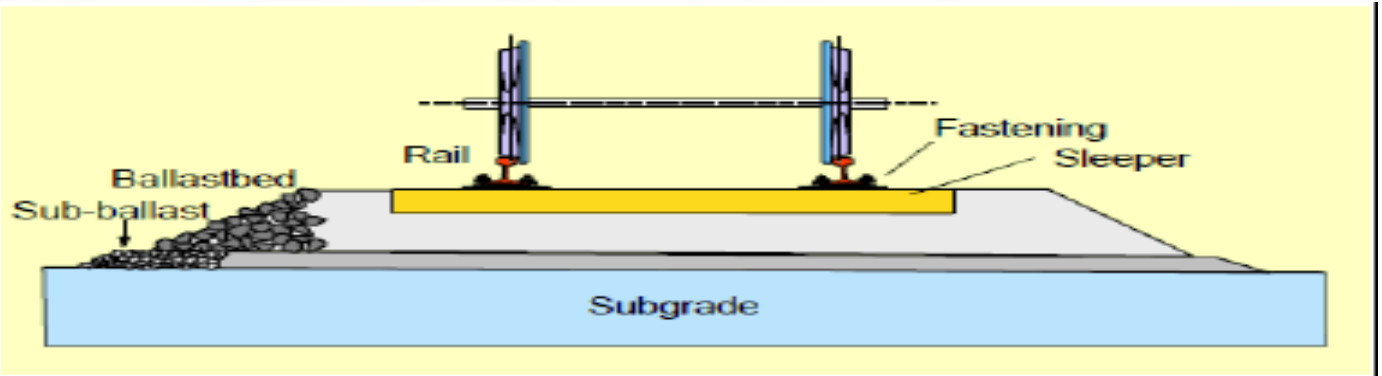

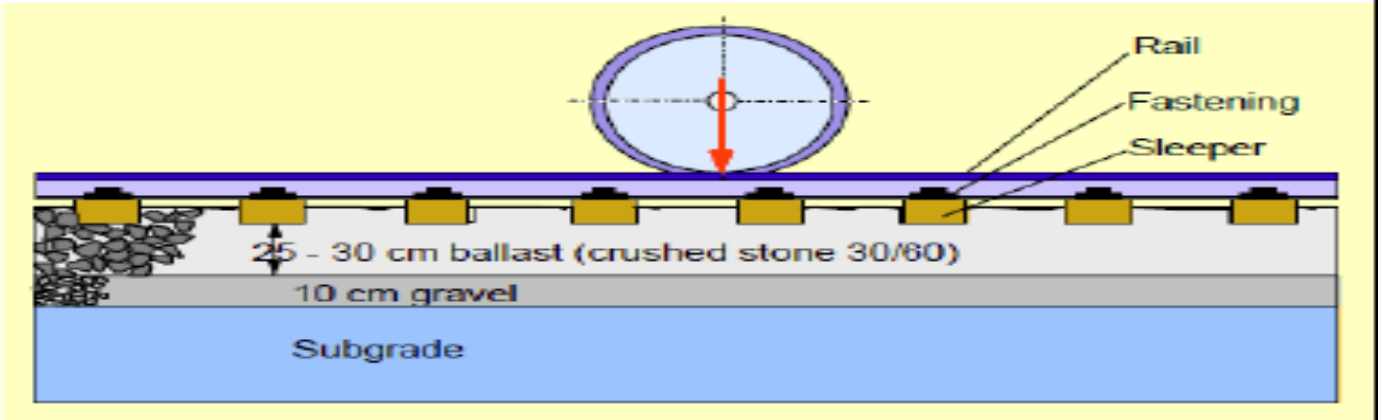

1. Rails

- Functions of rails
- Requirements of rails
- Type of rail sections
- Selection of rail section
- Length of rail section
- Test on rail sections
- Rail deformation or defects

Cont…

Definition

Rail:- **guides the conical, flanged wheels, keeping the vehicles on the track without active steering and therefore allowing trains to be much longer than road vehicles.**

-A rail is hot rolled steel of a specific cross sectional profile (an asymmetrical I-beam) designed for use as the fundamental component of railway track.

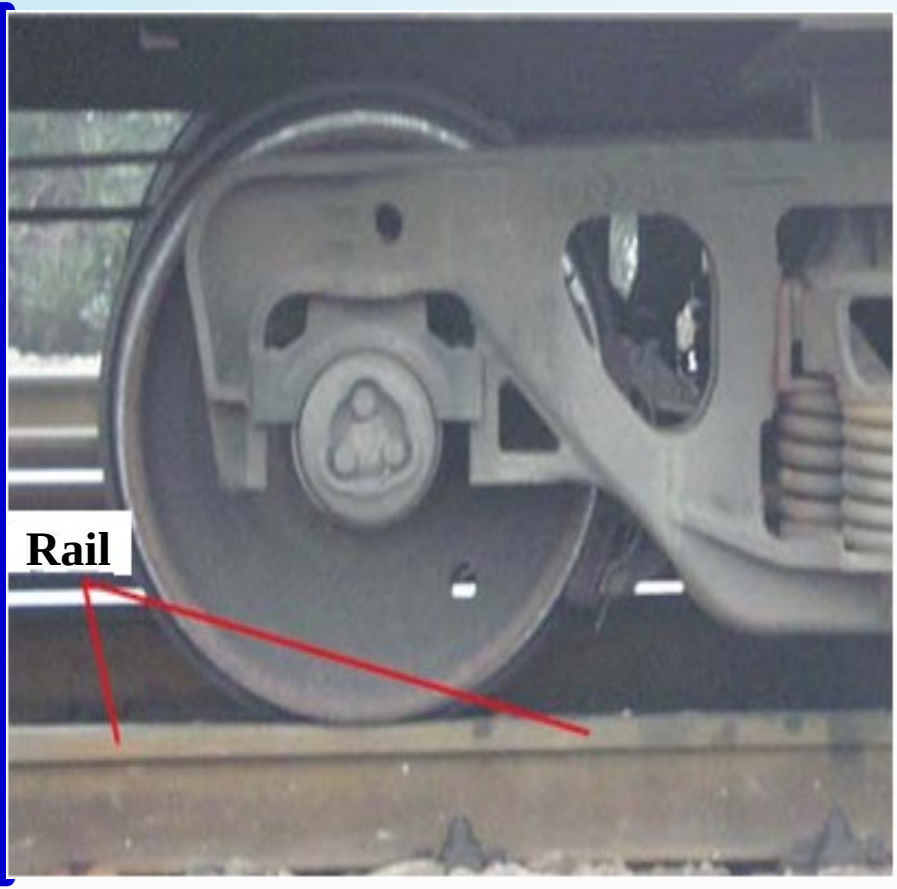

Cont…

Functions:-

- ✓Provide continuous and level surface
- ✓ Smooth surface with lesser friction
- ✓ Provide lateral guidance to wheels
- ✓ Bear stresses developed due to vertical loads, thermal and breaking effects
- ✓Transmit load to greater area below

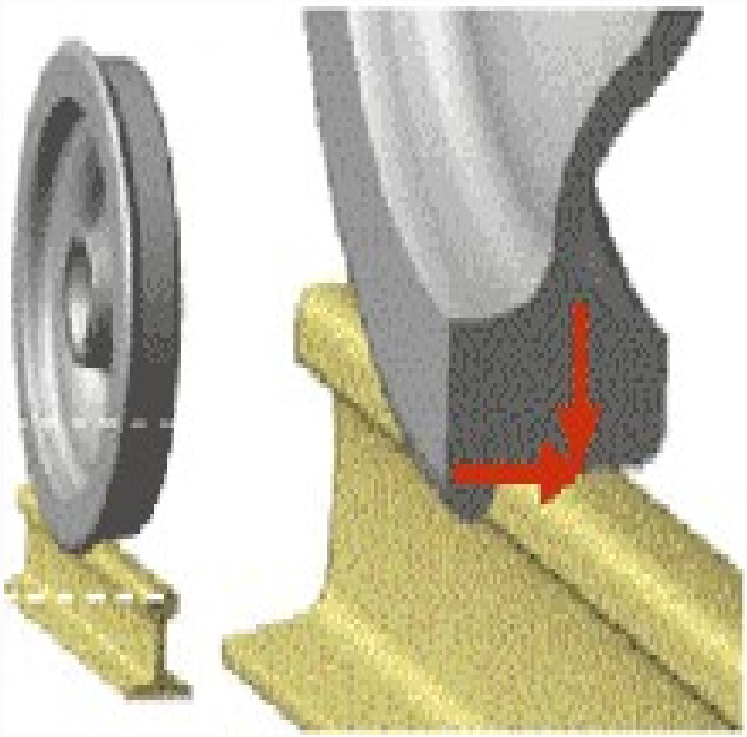

Cont..

Requirements

- Proper composition of steel
- Economical section

-Strength

-Durability

-Stiffness

- *CG near to center of height*

-Balancing of tensile and compressive stresses

Characteristics

- Rigidity
- Hardness
- Roughness of top surface

Cont…

Type and section

A) Profile

- **The rail profile is the cross sectional shape of a railway rail, perpendicular to the length of the rail.**
- Composed of rail head, rail web and rail base(foot)
- The rail head and base must be large and thick



Cont…

Head

-Adequate depth (vertical wear)

-Wide (wider running surface)

-Lateral stiffness

-Sufficiently vertical stiffness and strength

Web

-Sufficiently thick (resist lateral loads)

-Adequate flexural rigidity

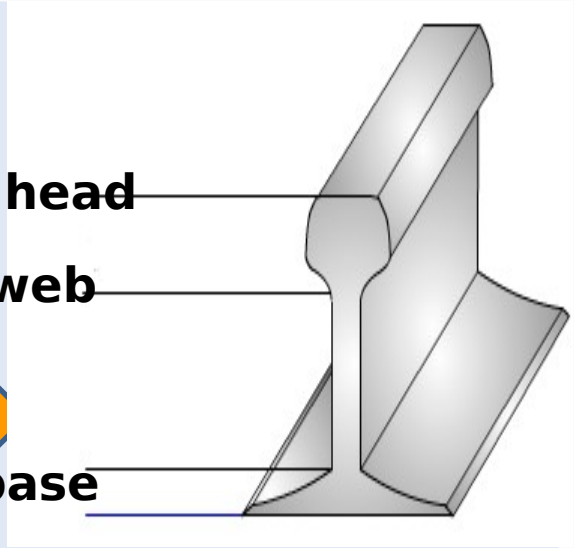

Foot

-Wide (stable against overturning)

-Thickness (with stand vertical and horizontal forces after allowance for corrosion)

-Fishing angles-design of bottom of rail head and top of rails foot

-Proper transmission of load from rail to fish plate

Cont…

Type of rail sections

i) **Double headed rail**

- **- Dumb section**

- Designed to use from both sides

ii) **Bull headed rail**

- Head was made a little thicker and strong

- Make stronger than the lower part by adding more metal to it.

iii) **Flat footed rail**

-Requires steel bearing plates for load distribution.

Cont…

Merits of flat footed rail

- ✓ Easy to fix
- ✓ More economical
- ✓ Greater strength and stiffness
- ✓ Lateral stability
- ✓ No keys, chairs required
- ✓ Simple arrangement at points and crossings.

Demerits

- ✓ Loosening of fittings
- ✓ Problems
  - -Straightening of bent rails
  - -Replacing of rail

Types , Length & Section

Types: 60 kg/m**,** 65 kg/m, 75 kg/m, 90kg/m and so on.

Standard rail length: 12.5m and 25m.

Selection of sections

✓ Various conditions in the selection of rail section are

- Heaviest axle load
- Maximum permissible speed
- Depth of ballast cushion
- Type and spacing of sleepers

The relationship between weight of rail and heaviest axle load, which the rails have to carry is

-maximum axle load=560*section wt.of rail

Comparison of standard section

- ✓*Strength*
- ✓*Stiffness*
- ✓*Laying and relaying*
- ✓*Arrangement and points and crossings*
- ✓*Alignment and stability*
- ✓*Initial cost*
- ✓*Rigidity*
- ✓*Inspection*
- ✓*Replacement*
- ✓*Maintenance*
- ✓*Suitability*

Rail Length

Length is restricted due to:-

- ✓ Easy of manufacturing
- ✓ Cost
- ✓ Lack of transportation facility
- ✓ Lifting and handling facility
- ✓ Expansion gap requirement
- ✓ Heavy thermal stresses in long rails

Tests of rail

- ✓ Falling weight test
- ✓ Chemical analysis test
- ✓ Tensile test

Rail Gap

To adapt to the needs of expanding with heat and contracting with cold, the rail gap can not be too big or too small.

$$\delta = 0.0118L(t_2 - t_0) + \frac{1}{2}\delta_q$$

- δ — size of rail gap(mm)
- L—length of track(m)
- δq— structural joint gap, track of 38kg/m,43kg/m 50kg/m,60kg/m,75kg/m are 18mm
- t_0 — temperature of rail gap(°C)

$$t_2 = \frac{1}{2}(t_{max} + t_{min})$$



Cont…

Rails must meet the following requirements

- High resistance to wear,
- High resistance to compression
- High resistance to fatigue
- High yield strength, tensile strength and hardness
- High resistance to brittle fracture
- Good weld ability
- High degree of purity
- Good surface quality
- Evenness and observance of profile.

2. Sleeper



(a) Function

- ✓ *Provide and support*
- ✓ *Hold rail to correct gauge and alignment*
- ✓ *Transfer load to wider area of ballast*
- *Act as elastic medium-absorb blows and vibrations*
- *Longitudinal and lateral stability*
- *Means to rectify track geometry*

✓ *Supporting signal engineering and other safety related equipment such* as trip cocks and point motors.

✓ *Supporting conductor rails, electrical bonds and feeder cables.*

✓ *Reducing noise and vibration*

Cont…

(b) Characteristic

It is solid, flexible, reasonably cost, convenient for manufacturing and maintenance.

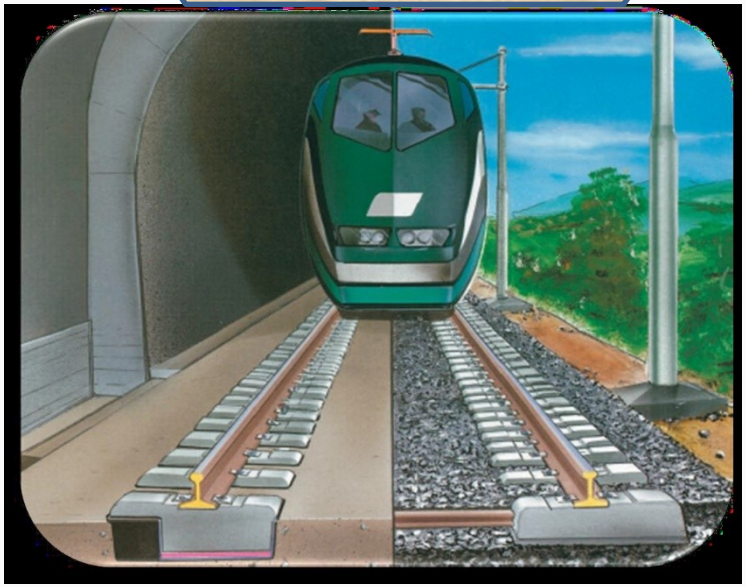



Cont…

- For trains *passing and overtaking*, stations shall be built. As for unfavorable geologic body which is difficult to detour, engineering ***improvement measures*** shall be taken in order to ensure operation safety.

c) Requirements

- Minimum initial and maintenance cost
- Moderate weight-easy to handle
- Fixing and removing of fastenings should be easy
- Sufficient bearing area
- Easy maintenance and gauge adjustment.
- Track circuiting must be possible.
- Able to resist shocks and vibrations

Types Sleeper

- According to production material: reinforced concrete sleeper, wooden sleeper, steel sleeper

- According to their usage: regular sleeper, switch sleeper and bridge sleeper.

Wooden Sleeper

- Durable type (service life 19yrs)

-Non durable type(service life 12,5yrs)

- ***Creosote treating*** can reduce insect infestation and rot.
- *Moisture content in sleepers to be treated by pressure treatment should not be more than 25%.*





Advantage of Wooden sleeper

- ✓ Cheap
- ✓ Easy to manufacture and handle.
- ✓ Good dampening effect
- ✓ Suitable for track circuiting
- ✓ Suitable for yielding formations, bridges, ash pits, etc.(with or without stone ballast)
- ✓ Correction to alignment is easy

Disadvantage of Wooden sleepers

- ✓ Liable to mechanical wear
- ✓ Shorter life due to decay, wear, attack of vermin
- ✓ Maintenance of gauge is difficult
- ✓ Susceptible to fire hazards
- ✓ Scrap value is negligible

2. Concrete sleeper

-Service life 40-50yrs.

-Land strength and stability to tracks.

- Maintain gauge, cross level and alignment better.





Cont…

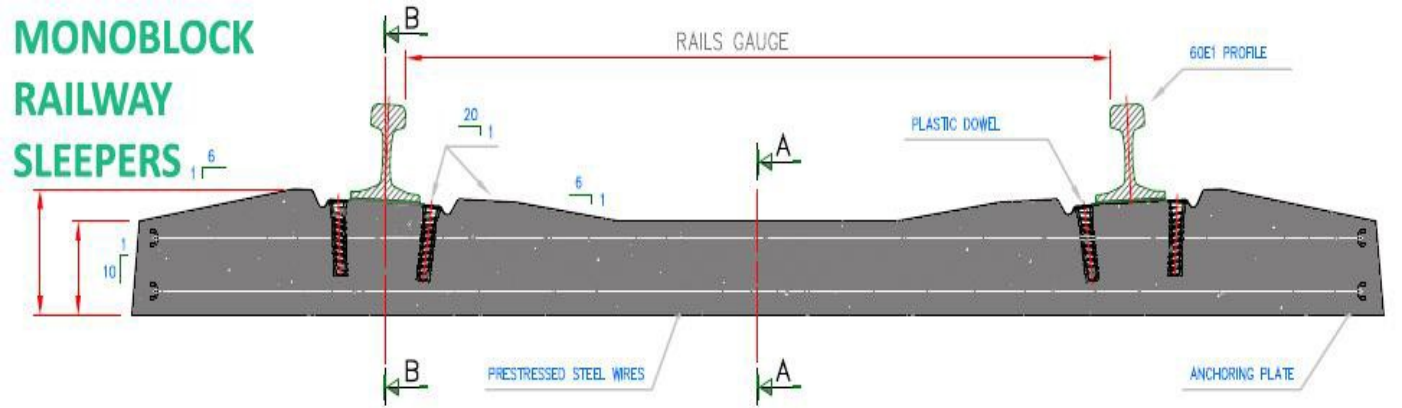



Wooden sleeper



concrete sleeper

Advantage of concrete sleepers

Advantages

- ✓ *Being heavy, land strength and stability to track*
- ✓ *Maintain gauge, alignment and cross level.*
- ✓ *Track circuiting is possible*
- ✓ *Corrosion, damage due to rests*
- ✓ *Fire hazard not possible*

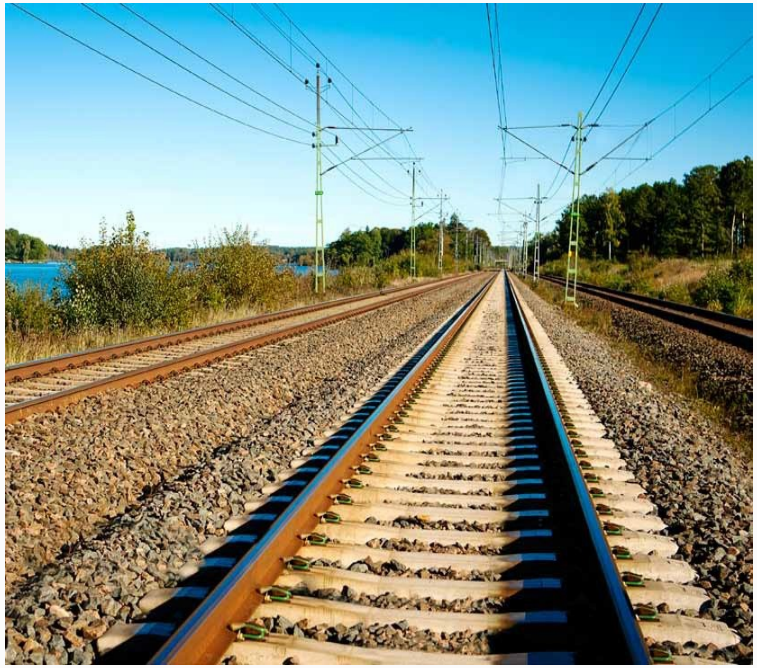

Disadvantage of concrete sleepers

Disadvantage

- Handling and laying difficult
- Heavy damages during derailment
- Not suitable for better packing
- Cost increase due to use of mechanical handling pressure

3. Steel Sleepers

- ✓ *Service life 50 yrs*
- ✓ *Rolled steel plate,12mm thick*

Advantages:

- Long life
- Better lateral rigidity
- Free from decay and fire hazards
- Lesser damage during handling /transportation
- Less maintenance problems
- Easy to maintain gauge

Disadvantages:

- Liable to corrosion
- Unsuitable to track circuiting
- Rail specific

Steel Sleepers





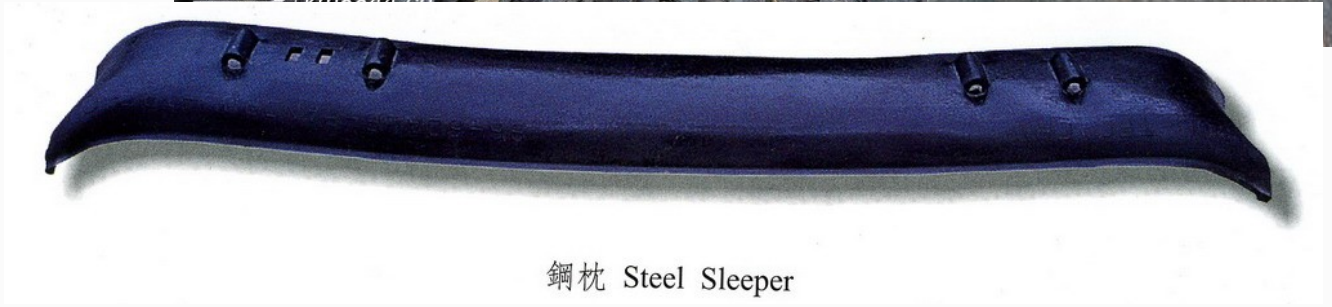

鋼枕 Steel Sleeper

Other sleepers

Switch sleeper



Bridge sleeper



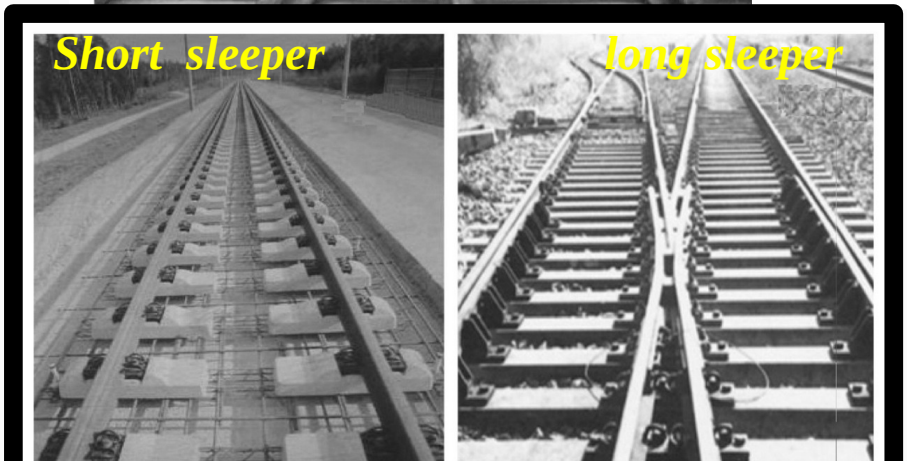

Cont…

Wide Sleeper

- Concrete monoblock sleepers have also been produced in a wider form (e.g. 57 cm (22 in))
- there is no ballast between the sleepers;
- wide sleeper increase lateral resistance and
- reduces ballast pressure.







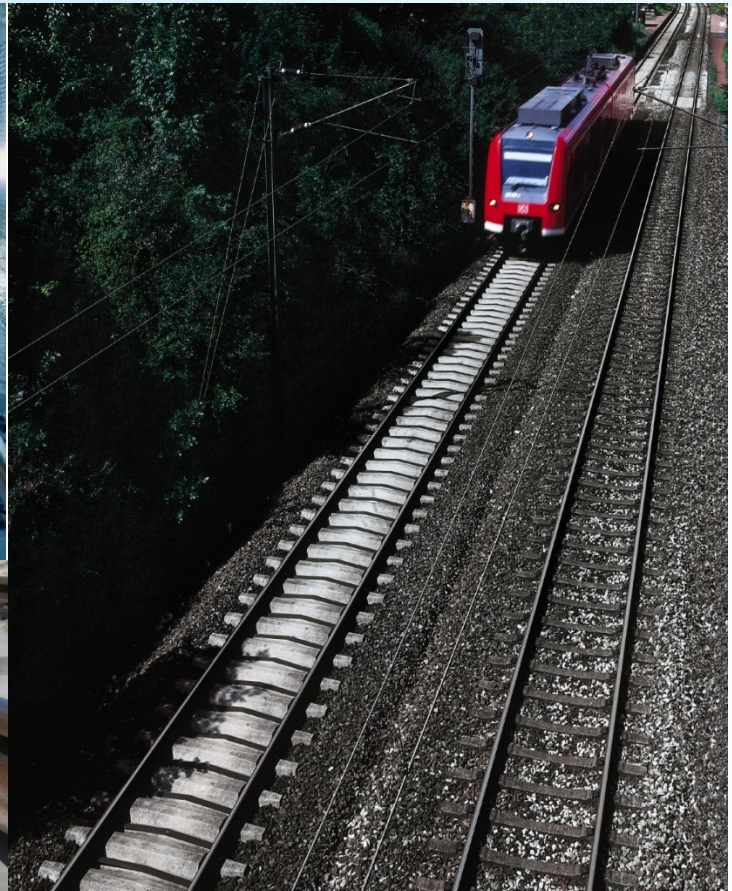

Sleeper Spacing

- S

Depends on

- *Axle loads*
- *Speed*
- *Rail section*
- *Sleeper*
- *Ballast cushion*
- *Formation level*

Cont…

Spacing of sleepers on welded track

-Spacing of sleepers in cms

- ***No of sleepers per km spacing c/c in cm***

1660	*60cm*
1540	*65cm*
1310	*78cm*

3. Ballast and sub ballast

1. **Ballast**- it is a layer of broken stones, gravel, moorum or any other gritty material placed and packed below and around sleepers.

Functions

- ***Provide level and hard bed for sleepers***
- ***Hold sleepers in position***
- ***Transfer and distribute load to wide area***
- ***Provide elasticity and resistance to track***
- ***Provide longitudinal and lateral stability***
- ***Provide effective drainage***
- ***Maintain level and alignment of track***





(b)Requirements

- Tough and resist wear
- Hard enough
- Cubical with sharp edge
- Non porous, non-water absorbent
- Resist attrition
- Durable
- Good drainage
- Cheap and economical

Sub ballast: –

Is a layer of material between the top ballast and sub grade with a gradation finer than the top ballast and coarser than the sub grade

a) Function

- Used to reduce total ballast cost
- Provide a filter layer between the top ballast and a fine grained sub grade

A sub ballast layer is required whenever:

i. The sub grade contains 85% or more (by weight) of silt and clay sized particles or,
ii. The sub grade material has a liquid limit greater 50 and a plasticity index grater than 20

c) Material

Sub ballast should be:-

- ✓ Hard
- ✓ Angular
- ✓ Non cementing material
- ✓ Primarily of sand sized particles

4. Rail fastening system/ Union piece

- A Rail fastening system is a means of fixing rails to railroad sleepers.
- Union pieces are divided into rail joint fastenings and middle joint fastenings.

Fastenings

- ***Track fittings***
- ***Rail to rail fittings***
- ***Rail to sleeper fittings***

a) Function:

The purpose of the rail fastenings:

- To maintain the track gauge
- Offer sufficient resistance in a vertical direction
- To transmit forces acting on and in the rails to the sleepers
- to minimize the loss of signals of the direct-current circuits

b) Types

(1) rail joint fastenings

Rail joint fastenings are used at the end of the two tracks.

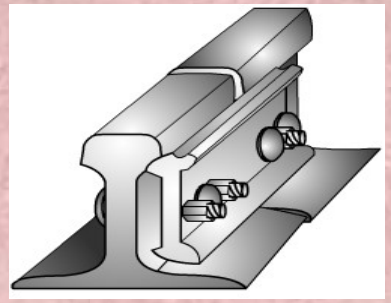



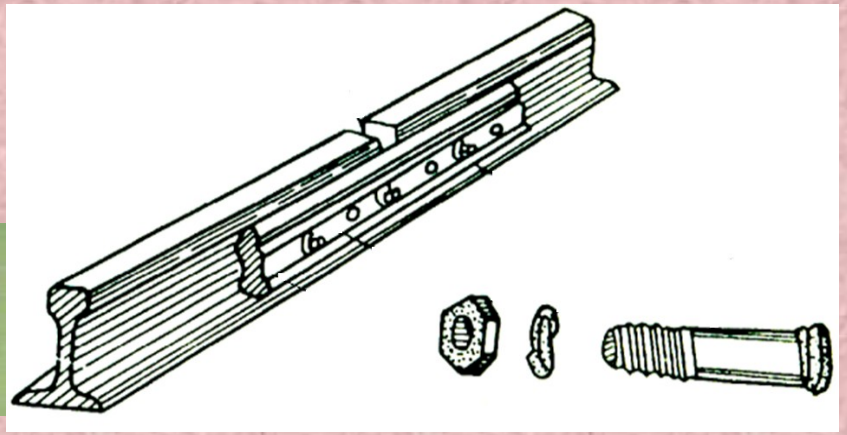

(2) Middle joint fastenings

- They are used to connect the track with the sleeper
- According to the character of sleeper, middle joint fastenings can divided into reinforced concreted joint fastenings and wooden joint fastenings.

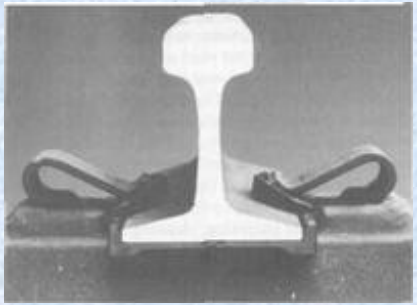

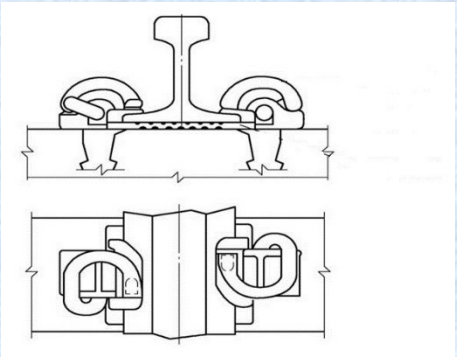

Wooden joint fastenings



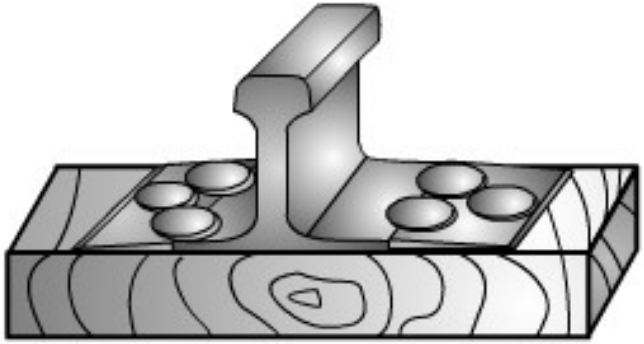



Reinforced concrete joint fastenings



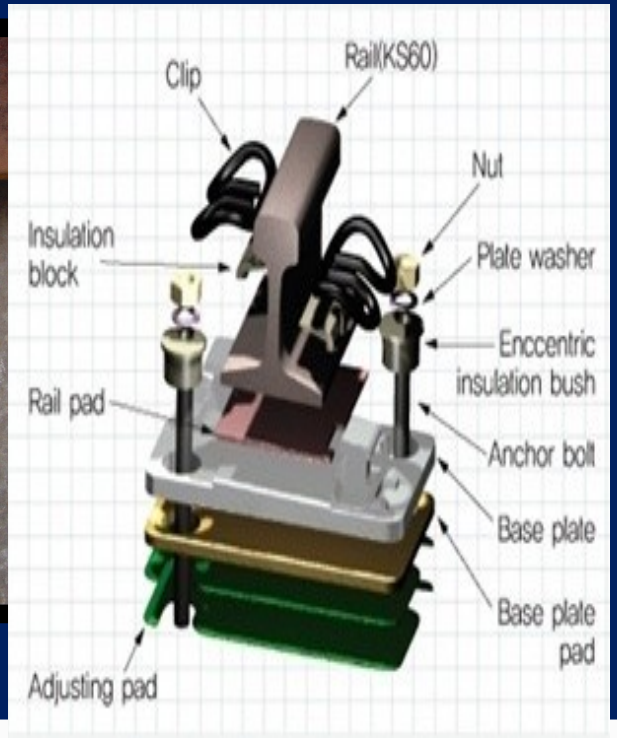

Reinforced concreted joint fastenings







Thank You!