COMB2	4.42	-8.03	756.81	1.976	3.851

Service Load 756.81 KN

1.976 kn-m

F 1

Col Size 0.3

t = 0.7

STEEL S- 400
CONCRETE C· 25

d = 0.64

Critical Sections

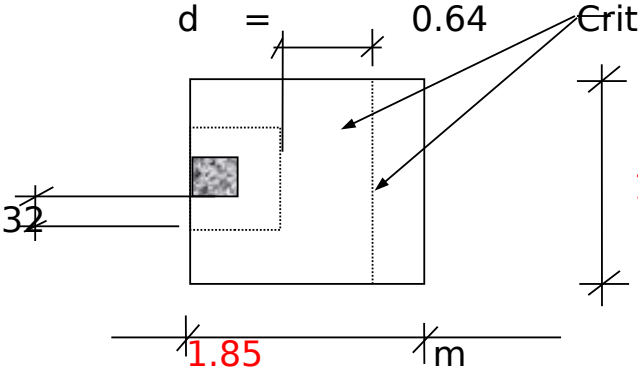

d/2 = 0.32

Check Soil Pressure

ɔm Self Weight of Ftg = 17.5 Kpa

ring Capacity = **250** Kpa

able Soil Pressure = **232.5** **Kpa**

e = 0.003 < L/6

$$q = \frac{P}{A} \pm \frac{My}{I}$$

$\frac{P}{A}$ = 756.81 / 3.4225 = 221.1

$\frac{My}{I}$ = y = 0.925 m

I = 0.98 m^4

↓	=	1.87	Kpa	
q	=	**223.0**	**Kpa**	OK
q	=	**219.3**	**Kpa**	OK

- Check Thickness

k Punching Shear

Ultimate Load: 870.3315 KN

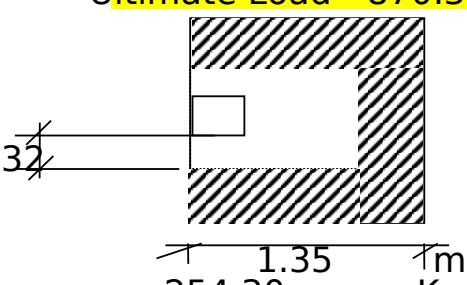

Tributary Area
Punching Sh

1.35 m

d/2 = 0.32

Pressure	=	254.30	Kpa
Trib. Area	=	1.29	m^2
Shear	=	327.20	KN

hear Capacity of Footing

$$V_{RD} = 0.5 f_{ctd} (1 + 50\rho) ud$$

Assumptions:

As = ϕ **16** spacing **150** mm

tion Occurs at d/2 (Note: EBCS say critical section is at 1.5d, which contradicts all text books Therefore, use d/2)

f_{ctd}	=	**1133**	kpa
d	=	0.665	m
ρ	=	0.00202	
u	=	2.08	

= **862.55** **KN** **OK**

:k one-way Action

d = 0.665

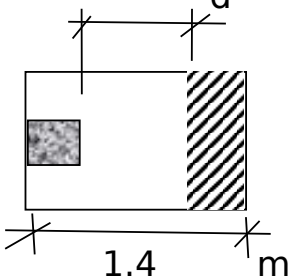

Tributary Area

1.4 m

1.4 m

Calculate Shear @ Critical Section

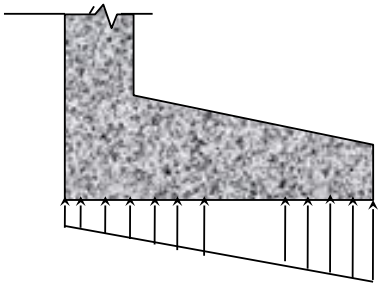

219.3

223.0 Kpa

itical Section From Edge of Footing is = 0.61
essure At Critical Section is = 221.369
hear At Critical Section is = 190.648

Shear Capacity of Section

$$V_c = 0.25 f_{ctd} k_1 k_2 b_w d$$

f_{ctd} = 1133

K_1 = (1+50ρ)

ρ = 0.00202

= 1.10

d = 0.665

K_2 = 1.6 -d = 1

b_w = 1.40

= **290.28** **Kn** **OK**

Design for Flexure

IN DIRECTION

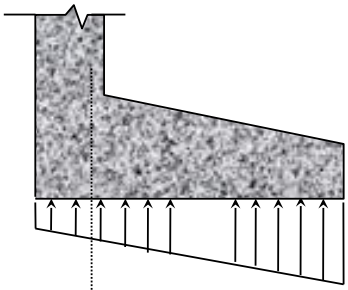

Critical Section For Moment

itical Section From Edge of Footing is = 1.28
essure At Critical Section is = 219.59
oment At Critical Section is = 180.33

Calculate Reinforcement

$$\rho_{req}=\frac{1}{m}\left[1-\sqrt{1-\frac{2mR_n}{f_{yd}}}\right] \quad ; \quad m=\frac{f_{yd}}{f_{cd}} \quad ;$$

f_{cd}	=	13600	Kpa
f_{yd}	=	260870.00	Kpa
d	=	0.665	m
b	=	1.00	m
m	=	19.18	
R_n	=	407.79	

= 0.0015873

As = 0.00106 = 5.250 Dia

Use ϕ 16 @ 150

VERSE DIRECTION

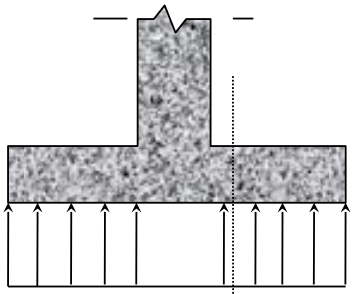

221.13 221.13

Critical Section For Moment

itical Section From Edge of Footing is = 0.55
essure At Critical Section is = 221.13
oment At Critical Section is = 33.45

Calculate Reinforcement

$$\rho_{req}=\frac{1}{m}\left[1-\sqrt{1-\frac{2mR_n}{f_{yd}}}\right] \quad ; \quad m=\frac{f_{yd}}{f_{cd}} \quad ;$$

f_{cd}	=	11333.33	Kpa
f_{yd}	=	347826.1	Kpa
d	=	0.665	m
b	=	1.00	m
m	=	30.69	
R_n	=	75.63	

= 0.0012500 use min Rho

As = 0.00083 = 5.400 Dia

Use ϕ 14 @ 150

-0.004	FL 2

x 0.25

L=

Kpa

a for
ear

a for

m
Kpa
Kn

m
Kpa
Kn - m/m

$$R_n = \frac{M_u}{bd^2}$$

16 bars

m
Kpa
Kn - m/m

$$R_n = \frac{M_u}{bd^2}$$

14 bars

Project	Residential Building		Date
Description	Footing Design		By
			Chkd

Service Load = 1528.70 KN

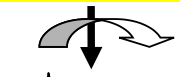

3.45 kn-m

F 1

Col Size 0.3 x

t = 1

STEEL S- **400**
CONCRETE C- **30**

d = 0.94

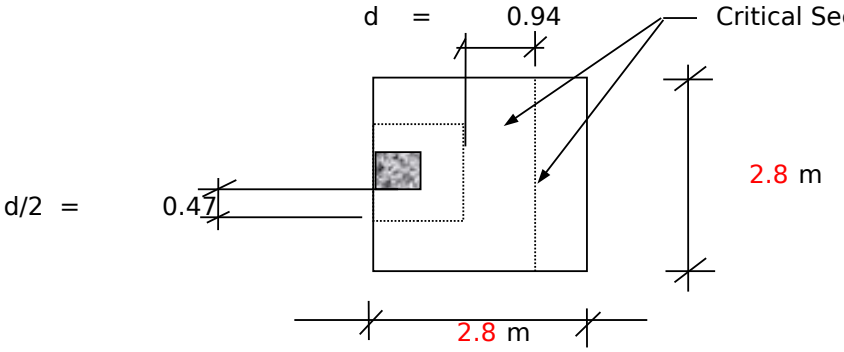

Step 1 - Check Soil Pressure

Pressure from Self Weight of Ftg = 25 Kpa
Bearing Capacity = **223.42** Kpa
Net Allowable Soil Pressure = **198.42** **Kpa**

e = 0.002 < L/6

$$q = \frac{P}{A} \pm \frac{My}{I}$$

$\frac{P}{A}$ = 1528.70 / 7.84 = 195.0 Kpa

$\frac{My}{I}$ = y = 1.4 m
I = 5.12 m^4

= 0.94 Kpa

q =	**195.9 Kpa**	OK
q =	**194.0 Kpa**	OK

Project	Residential Building		Date
Description	Footing Design		By
			Chkd

Step 2 - Check Thickness

Check Punching Shear

Ultimate Load= 1758.005 KN

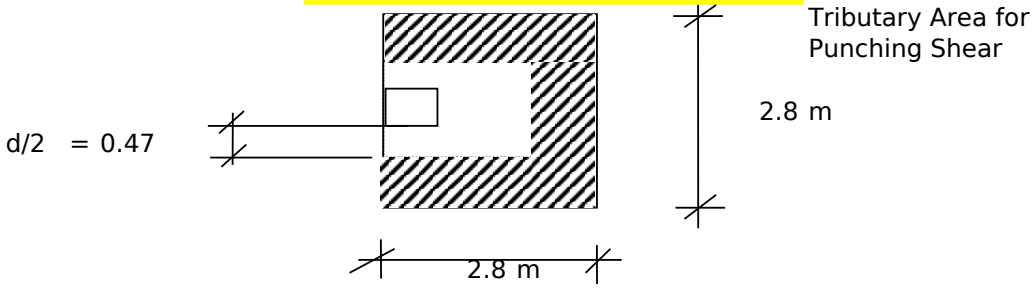

Tributary Area for Punching Shear

Pressure =	224.24	Kpa
Trib. Area =	6.64	m^2
Shear =	1488.29	KN

Punching Shear Capacity of Footing

$$V_{RD} = 0.5 f_{ctd} (1 + 50\rho) ud$$

Assumptions:

As = ϕ **20** spacing **100** mm

Critical Section Occurs at d/2 (Note: EBCS say critical section is at 1.5d, which contradicts all text books Therefore, use d/2)

f_{ctd} =	**1133**	kpa
d =	0.965	m
ρ =	0.00326	
u =	3.18	

= **2021.39** **KN** **OK**

Project	Residential Building		Date
Description	Footing Design		By
			Chkd

Check one-way Action d = 0.965

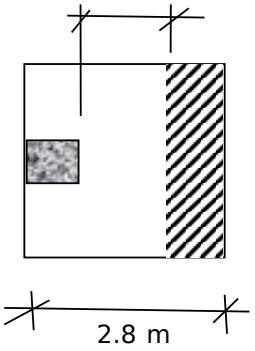

Tributary Area for one-way action

2.8 m

Calculate Shear @ Critical Section

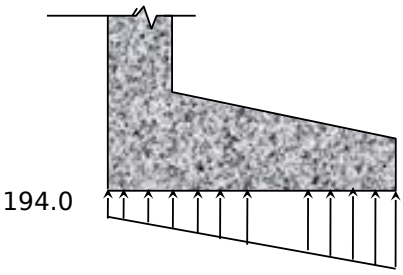

195.9 Kpa

Critical Section From Edge of Footing is	=	1.585 m
Pressure At Critical Section is	=	194.8628 Kpa
Shear At Critical Section is	=	868.98 Kn

Shear Capacity of Section

$$V_c = 0.25 f_{ctd} k_1 k_2 b_w d$$

f_{ctd}	=	1133		
K_1	=	(1+50ρ)		
		ρ =		0.00326
	=	1.16		
d	=	0.965		
K_2	=	1.6 -d =		1
b_w	=	2.80		

= **889.92 Kn** **OK**

Project	Residential Building		Date
Description	Footing Design		By
			Chkd

Step 3 - Design for Flexure

MAIN DIRECTION

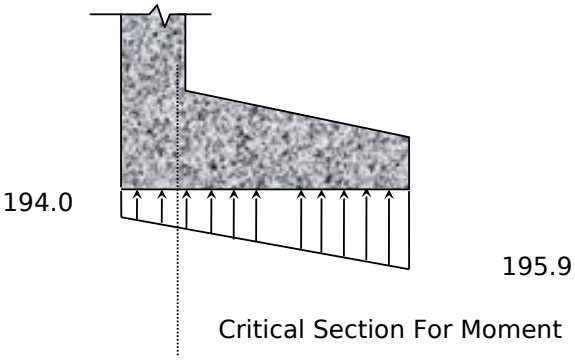

Critical Section From Edge of Footing is	=	2.55	m
Pressure At Critical Section is	=	194.21	Kpa
Moment At Critical Section is	=	635.15	Kn - m/r

Calculate Reinforcement

$$\rho_{req}=\frac{1}{m}\left[1-\sqrt{1-\frac{2mR_n}{f_{yd}}}\right] \quad ; \quad m=\frac{f_{yd}}{f_{cd}} \quad ; \quad R_n=\frac{M_u}{bd^2}$$

f_{cd}	=	13600 Kpa
f_{yd}	=	260870.00 Kpa
d	=	0.965 m
b	=	1.00 m
m	=	19.18
R_n	=	682.06

= 0.0026836

As = 0.00259 = 8.243 Dia 20

Use ϕ 20 @ 100

Project	Residential Building		Date
Description	Footing Design		By
			Chkd

TRANSVERSE DIRECTION

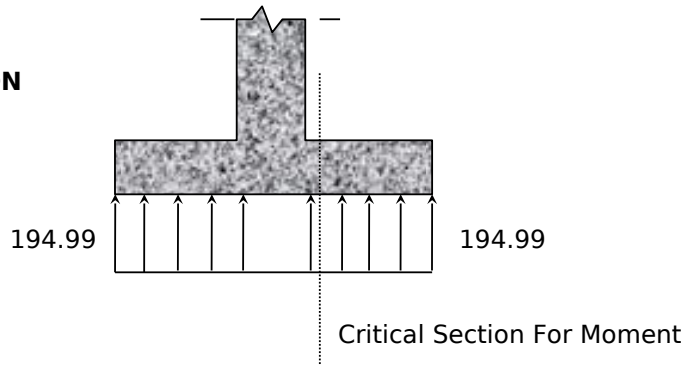

Critical Section From Edge of Footing is	=	1.25	m
Pressure At Critical Section is	=	194.99	Kpa
Moment At Critical Section is	=	152.33	Kn - m/r

Calculate Reinforcement

$$\rho_{req}=\frac{1}{m}\left[1-\sqrt{1-\frac{2mR_n}{f_{yd}}}\right] \quad ; \quad m=\frac{f_{yd}}{f_{cd}} \quad ; \quad R_n=\frac{M_u}{bd^2}$$

f_{cd}	=	13600.00	Kpa
f_{yd}	=	347826.1	Kpa
d	=	0.965	m
b	=	1.00	m
m	=	25.58	
R_n	=	163.58	

= 0.0012500 use min Rho

As = 0.00121 = 7.836 Dia 14

Use ϕ 14 @ 100

DEC,2017

R.A

0.5

DEC,2017

R.A

ɳ

$$R_n = \frac{M_u}{bd^2}$$

bars

DEC,2017

R.A

ɱ

$$R_n = \frac{M_u}{bd^2}$$

bars

Project	Residential Building		Date
Description	Footing Design		By
			Chkd

Service Load = 1111.77 KN

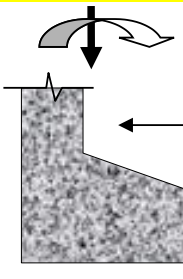

F 1

STEEL S- **400**
CONCRETE C- **30**

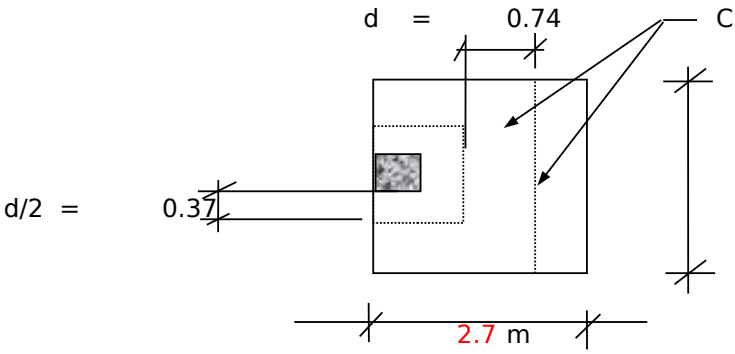

Step 1 - Check Soil Pressure

Pressure from Self Weight of Ftg = 20 Kpa
Bearing Capacity = **223.42** Kpa
Net Allowable Soil Pressure = **203.42** **Kpa**

e = 0.003 < L/6

$$q = \frac{P}{A} \pm \frac{My}{I}$$

$\frac{P}{A}$ = 1111.77 / 7.29 = 152.5 Kpa

$\frac{My}{I}$ = y = 1.35 m; I = 4.43 m^4

= 1.07 Kpa

q = **153.6 Kpa** OK
q = **151.4 Kpa** OK

Project	Residential Building		Date
Description	Footing Design		By
			Chkd

Step 2 - Check Thickness

Check Punching Shear

Ultimate Load= 1278.5355 KN

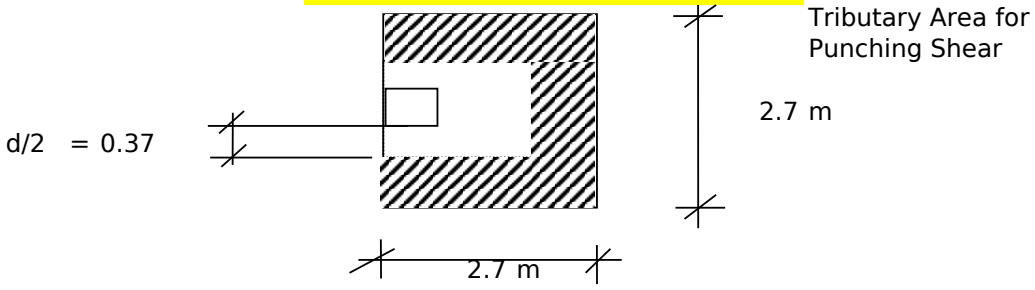

Tributary Area for Punching Shear

Pressure =	175.38	Kpa
Trib. Area =	6.39	m^2
Shear =	1119.85	KN

Punching Shear Capacity of Footing

$$V_{RD} = 0.5 f_{ctd} (1 + 50\rho) ud$$

Assumptions:

As = ϕ **20** spacing **100** mm

Critical Section Occurs at d/2 (Note: EBCS say critical section is at 1.5d, which contradicts all text books Therefore, use d/2)

f_{ctd}	=	**1133**	kpa
d	=	0.765	m
ρ	=	0.00411	
u	=	2.78	

= **1452.16** **KN** **OK**

Project	Residential Building		Date
Description	Footing Design		By
			Chkd

Check one-way Action d = 0.765

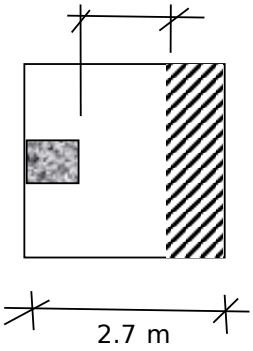

Tributary Area for one-way action

Calculate Shear @ Critical Section

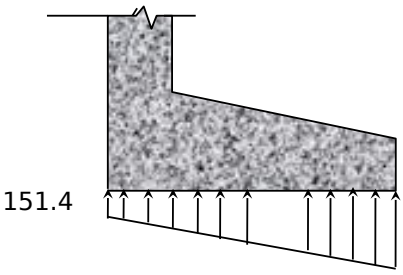

Critical Section From Edge of Footing is	=	1.685 m
Pressure At Critical Section is	=	152.2418 Kpa
Shear At Critical Section is	=	697.471 Kn

Shear Capacity of Section

$$V_c = 0.25 f_{ctd} k_1 k_2 b_w d$$

f_{ctd} = 1133

K_1 = (1+50ρ)

ρ = 0.00411

= 1.21

d = 0.765

K_2 = 1.6 -d = 1

b_w = 2.70

= **705.18 Kn** **OK**

Project	Residential Building		Date
Description	Footing Design		By
			Chkd

Step 3 - Design for Flexure

MAIN DIRECTION

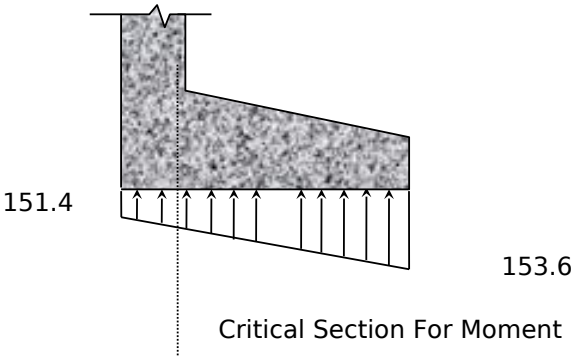

Critical Section From Edge of Footing is	=	2.45	m
Pressure At Critical Section is	=	151.64	Kpa
Moment At Critical Section is	=	458.97	Kn - m/r

Calculate Reinforcement

$$\rho_{req}=\frac{1}{m}\left[1-\sqrt{1-\frac{2mR_n}{f_{yd}}}\right] \quad ; \quad m=\frac{f_{yd}}{f_{cd}} \quad ; \quad R_n=\frac{M_u}{bd^2}$$

f_{cd}	=	13600 Kpa
f_{yd}	=	260870.00 Kpa
d	=	0.765 m
b	=	1.00 m
m	=	19.18
R_n	=	784.27

= 0.0030984

As = 0.00237 = 7.545 Dia 20

Use ϕ 20 @ 100

Project	Residential Building		Date
Description	Footing Design		By
			Chkd

TRANSVERSE DIRECTION

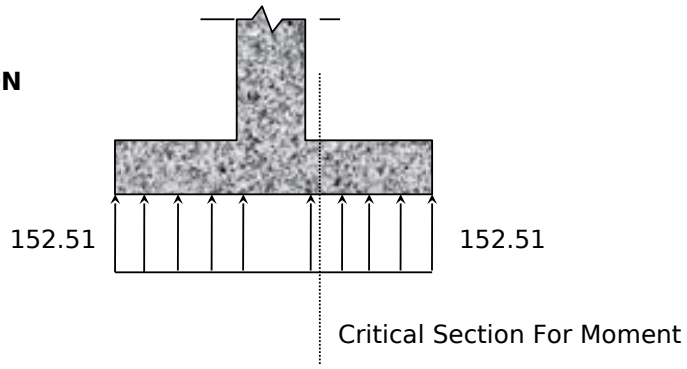

Critical Section From Edge of Footing is	=	1.20	m
Pressure At Critical Section is	=	152.51	Kpa
Moment At Critical Section is	=	109.80	Kn - m/r

Calculate Reinforcement

$$\rho_{req}=\frac{1}{m}\left[1-\sqrt{1-\frac{2mR_n}{f_{yd}}}\right] \quad ; \quad m=\frac{f_{yd}}{f_{cd}} \quad ; \quad R_n=\frac{M_u}{bd^2}$$

f_{cd}	=	13600.00	Kpa
f_{yd}	=	347826.1	Kpa
d	=	0.765	m
b	=	1.00	m
m	=	25.58	
R_n	=	187.63	

= 0.0012500 use min Rho

As = 0.00096 = 8.455 Dia 12

Use ϕ 12 @ 100

DEC,2017

R.A

0.5

DEC,2017

R.A

ɳ

$$R_n = \frac{M_u}{bd^2}$$

bars

DEC,2017

R.A

ɱ

$$R_n = \frac{M_u}{bd^2}$$

bars

Project	Residential Building		Date
Description	Footing Design		By
			Chkd

Service Load = 1545.34 KN

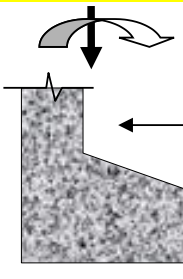

F 1

STEEL S- **400**
CONCRETE C- **30**

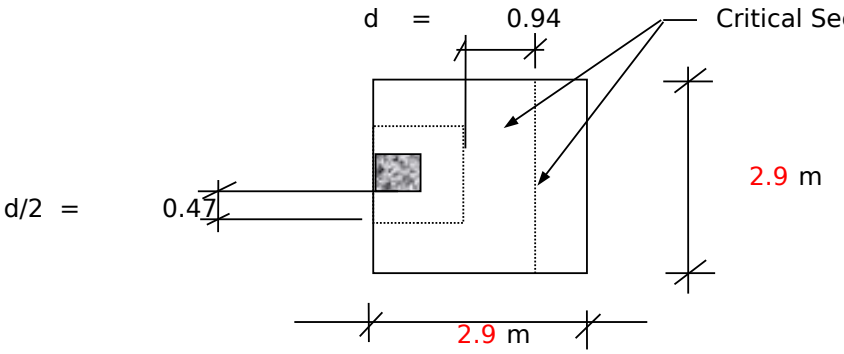

Step 1 - Check Soil Pressure

Pressure from Self Weight of Ftg = 25 Kpa
Bearing Capacity = **223.42** Kpa
Net Allowable Soil Pressure = **198.42** **Kpa**

e = 0.004 < L/6

$$q = \frac{P}{A} \pm \frac{My}{I}$$

$\frac{P}{A}$ = 1545.34 / 8.41 = 183.8 Kpa

$\frac{My}{I}$ = y = 1.45 m; I = 5.89 m^4

= 1.59 Kpa

q =	**185.3 Kpa**	OK
q =	**182.2 Kpa**	OK

Project	Residential Building		Date
Description	Footing Design		By
			Chkd

Step 2 - Check Thickness

Check Punching Shear

Ultimate Load= 1777.141 KN

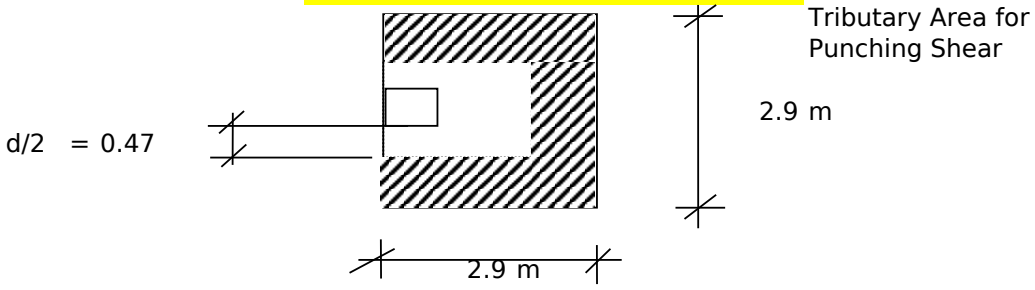

Tributary Area for Punching Shear

Pressure =	211.31	Kpa
Trib. Area =	7.21	m^2
Shear =	1522.97	KN

Punching Shear Capacity of Footing

$$V_{RD} = 0.5 f_{ctd} (1 + 50\rho) ud$$

Assumptions:

As = ϕ **20** spacing **100** mm

Critical Section Occurs at d/2 (Note: EBCS say critical section is at 1.5d, which contradicts all text books Therefore, use d/2)

f_{ctd}	=	**1133**	kpa
d	=	0.965	m
ρ	=	0.00326	
u	=	3.18	

= **2021.39** **KN** **OK**

Project	Residential Building		Date
Description	Footing Design		By
			Chkd

Check one-way Action d = 0.965

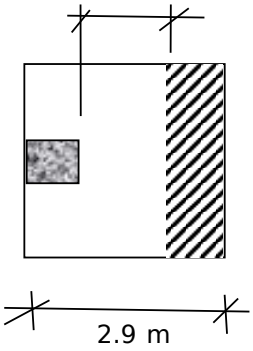

Tributary Area for one-way action

2.9 m

Calculate Shear @ Critical Section

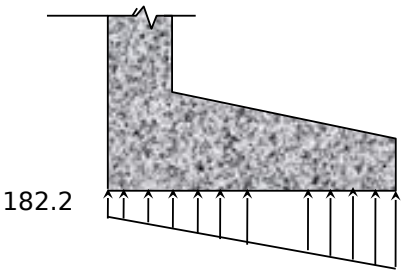

185.3 Kpa

Critical Section From Edge of Footing is	=	1.685 m
Pressure At Critical Section is	=	183.4928 Kpa
Shear At Critical Section is	=	904.402 Kn

Shear Capacity of Section

$$V_c = 0.25 f_{ctd} k_1 k_2 b_w d$$

f_{ctd}	=	1133		
K_1	=	(1+50ρ)		
		ρ =		0.00326
	=	1.16		
d	=	0.965		
K_2	=	1.6 -d =		1
b_w	=	2.90		

= **921.70 Kn** **OK**

Project	Residential Building		Date
Description	Footing Design		By
			Chkd

Step 3 - Design for Flexure

MAIN DIRECTION

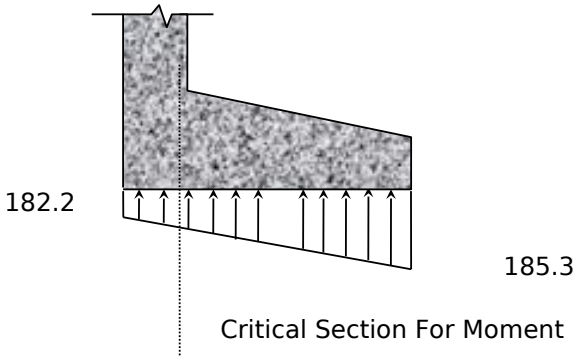

Critical Section From Edge of Footing is	=	2.65	m
Pressure At Critical Section is	=	182.44	Kpa
Moment At Critical Section is	=	647.37	Kn - m/r

Calculate Reinforcement

$$\rho_{req}=\frac{1}{m}\left[1-\sqrt{1-\frac{2mR_n}{f_{yd}}}\right] \quad ; \quad m=\frac{f_{yd}}{f_{cd}} \quad ; \quad R_n=\frac{M_u}{bd^2}$$

f_{cd}	=	13600 Kpa
f_{yd}	=	260870.00 Kpa
d	=	0.965 m
b	=	1.00 m
m	=	19.18
R_n	=	695.19

= 0.0027367

As = 0.00264 = 8.406 Dia 20

Use ϕ 20 @ 100

Project	Residential Building		Date
Description	Footing Design		By
			Chkd

TRANSVERSE DIRECTION

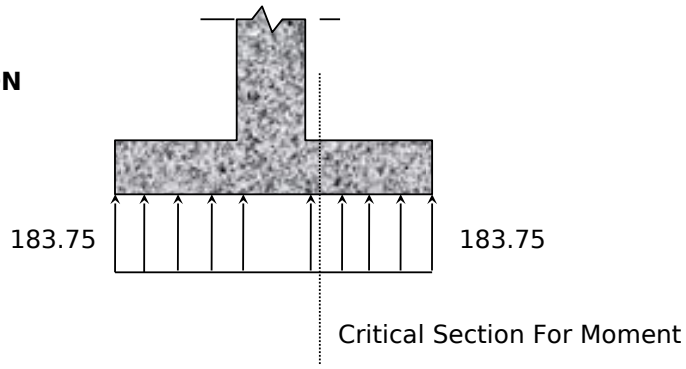

Critical Section From Edge of Footing is	=	1.30	m
Pressure At Critical Section is	=	183.75	Kpa
Moment At Critical Section is	=	155.27	Kn - m/r

Calculate Reinforcement

$$\rho_{req}=\frac{1}{m}\left[1-\sqrt{1-\frac{2mR_n}{f_{yd}}}\right] \quad ; \quad m=\frac{f_{yd}}{f_{cd}} \quad ; \quad R_n=\frac{M_u}{bd^2}$$

f_{cd}	=	13600.00	Kpa
f_{yd}	=	347826.1	Kpa
d	=	0.965	m
b	=	1.00	m
m	=	25.58	
R_n	=	166.74	

= 0.0012500 use min Rho

As = 0.00121 = 7.836 Dia 14

Use ϕ 14 @ 100

DEC,2017

R.A

0.5

DEC,2017

R.A

ɳ

$$R_n = \frac{M_u}{bd^2}$$

bars

DEC,2017

R.A

ɱ

$$R_n = \frac{M_u}{bd^2}$$

bars

Project	Residential Building		Date
Description	Footing Design		By
			Chkd

Service Load = 1068.59 KN

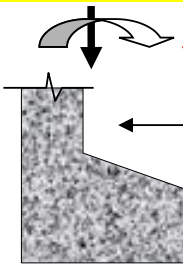

F 1

STEEL S- **400**
CONCRETE C- **30**

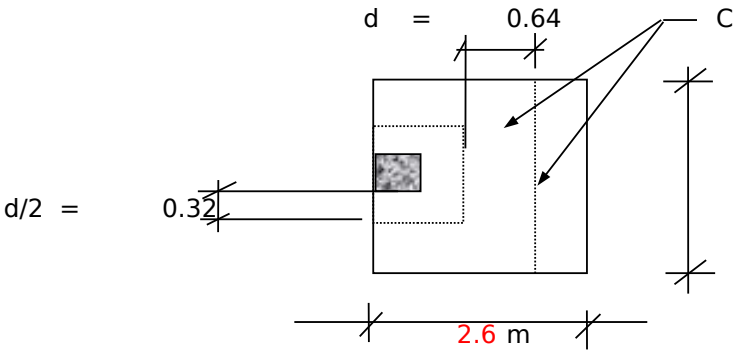

Step 1 - Check Soil Pressure

Pressure from Self Weight of Ftg = 17.5 Kpa
Bearing Capacity = **223.42** Kpa
Net Allowable Soil Pressure = **205.92** **Kpa**

$e = -0.104 < \frac{L}{6}$

$$q = \frac{P}{A} \pm \frac{My}{I}$$

$\frac{P}{A} = \frac{1068.59}{6.76} = 158.1$ Kpa

$\frac{My}{I} = \frac{y}{I} = \frac{1.3}{3.81}$ m, m^4

$= -37.76$ Kpa

q	**=**	**120.3 Kpa**	OK
q	**=**	**195.8 Kpa**	OK

Project	Residential Building		Date
Description	Footing Design		By
			Chkd

Step 2 - Check Thickness

Check Punching Shear

Ultimate Load= 1228.8785 KN

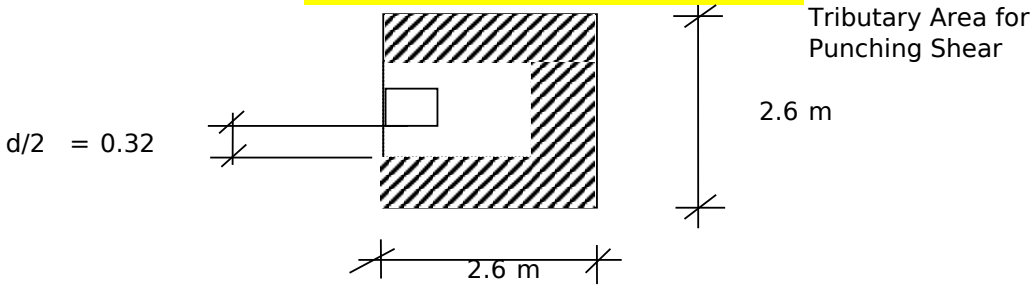

Pressure =	181.79	Kpa
Trib. Area =	5.99	m^2
Shear =	1088.76	KN

Punching Shear Capacity of Footing

$$V_{RD} = 0.5 f_{ctd} (1 + 50\rho) ud$$

Assumptions:

As = ϕ **20** spacing **100** mm

Critical Section Occurs at d/2 (Note: EBCS say critical section is at 1.5d, which contradicts all text books Therefore, use d/2)

f_{ctd}	=	**1133**	kpa
d	=	0.665	m
ρ	=	0.00472	
u	=	2.58	

= **1201.53** **KN** **OK**

Project	Residential Building		Date
Description	Footing Design		By
			Chkd

Check one-way Action d = 0.665

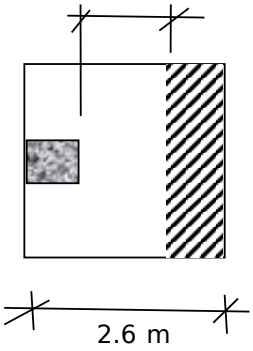

Tributary Area for one-way action

Calculate Shear @ Critical Section

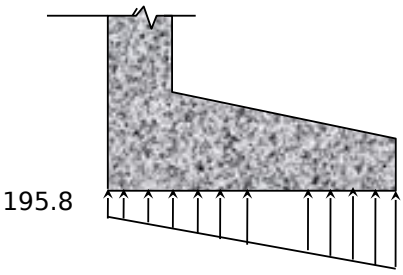

Critical Section From Edge of Footing is	=	1.685 m
Pressure At Critical Section is	=	169.2588 Kpa
Shear At Critical Section is	=	576.088 Kn

Shear Capacity of Section

$$V_c = 0.25 f_{ctd} k_1 k_2 b_w d$$

f_{ctd}	=	1133		
K_1	=	(1+50ρ)		
		ρ =		0.00472
	=	1.24		
d	=	0.665		
K_2	=	1.6 -d =		1
b_w	=	2.60		

= **605.42 Kn** **OK**

Project	Residential Building		Date
Description	Footing Design		By
			Chkd

Step 3 - Design for Flexure

MAIN DIRECTION

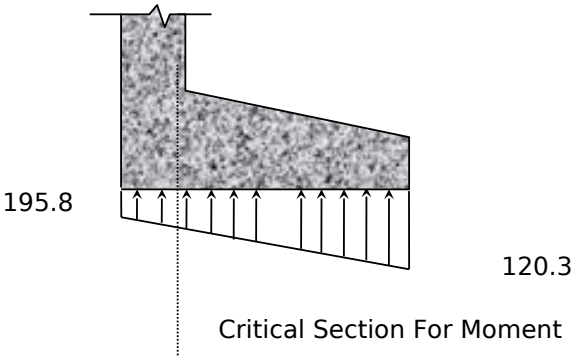

Critical Section From Edge of Footing is	=	2.35	m
Pressure At Critical Section is	=	188.58	Kpa
Moment At Critical Section is	=	395.05	Kn - m/r

Calculate Reinforcement

$$\rho_{req}=\frac{1}{m}\left[1-\sqrt{1-\frac{2mR_n}{f_{yd}}}\right] \quad ; \quad m=\frac{f_{yd}}{f_{cd}} \quad ; \quad R_n=\frac{M_u}{bd^2}$$

f_{cd}	=	13600 Kpa
f_{yd}	=	260870.00 Kpa
d	=	0.665 m
b	=	1.00 m
m	=	19.18
R_n	=	893.31

= 0.0035449

As = 0.00236 = 7.504 Dia 20

Use ϕ 20 @ 100

Project	Residential Building		Date
Description	Footing Design		By
			Chkd

TRANSVERSE DIRECTION

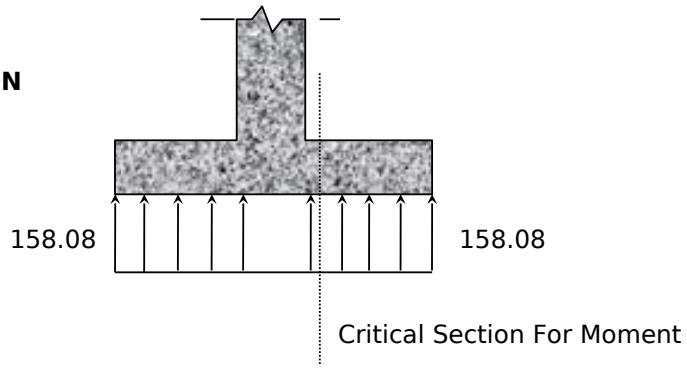

Critical Section From Edge of Footing is	=	1.15	m
Pressure At Critical Section is	=	158.08	Kpa
Moment At Critical Section is	=	104.53	Kn - m/r

Calculate Reinforcement

$$\rho_{req}=\frac{1}{m}\left[1-\sqrt{1-\frac{2mR_n}{f_{yd}}}\right] \quad ; \quad m=\frac{f_{yd}}{f_{cd}} \quad ; \quad R_n=\frac{M_u}{bd^2}$$

f_{cd}	=	13600.00	Kpa
f_{yd}	=	347826.1	Kpa
d	=	0.665	m
b	=	1.00	m
m	=	25.58	
R_n	=	236.37	

= 0.0012500 use min Rho

As = 0.00083 = 7.350 Dia 12

Use ϕ 12 @ 100

DEC,2017

R.A

0.5

DEC,2017

R.A

ɳ

$$R_n = \frac{M_u}{bd^2}$$

bars

DEC,2017

R.A

ɱ

$$R_n = \frac{M_u}{bd^2}$$

bars

Project	Residential Building		Date
Description	Footing Design		By
			Chkd

Service Load = 1197.75 KN

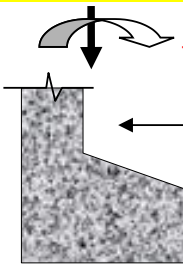

F 1

Col Size 0.3 x

t = 0.8

STEEL S- **400**
CONCRETE C- **30**

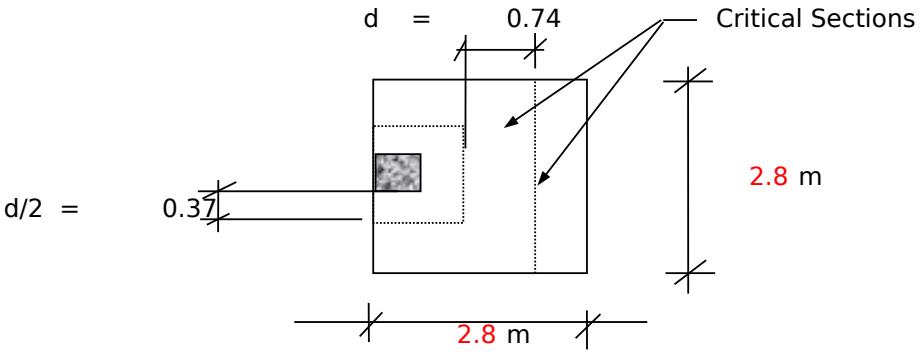

Step 1 - Check Soil Pressure

Pressure from Self Weight of Ftg = 20 Kpa
Bearing Capacity = **223.42** Kpa
Net Allowable Soil Pressure = 203.42 Kpa

e = -0.108 < L/6

$$q = \frac{P}{A} \pm \frac{My}{I}$$

$\frac{P}{A}$ = 1197.75 / 7.84 = 152.8 Kpa

$\frac{My}{I}$ = y = 1.4 m
I = 5.12 m^4

= -35.32 Kpa

q =	**117.5 Kpa**	OK
q =	**188.1 Kpa**	OK

Project	Residential Building		Date
Description	Footing Design		By
			Chkd

Step 2 - Check Thickness

Check Punching Shear

Ultimate Load= 1377.4125 KN

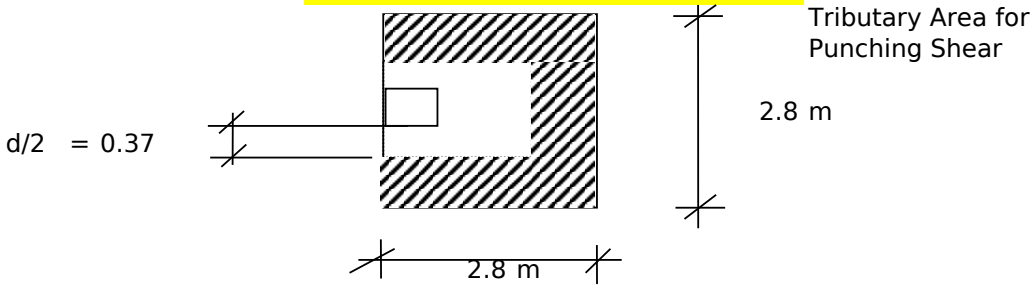

Tributary Area for Punching Shear

Pressure =	175.69	Kpa
Trib. Area =	6.94	m^2
Shear =	1218.45	KN

Punching Shear Capacity of Footing

$$V_{RD} = 0.5 f_{ctd} (1 + 50\rho) ud$$

Assumptions:

As = ϕ **20** spacing **100** mm

Critical Section Occurs at d/2 (Note: EBCS say critical section is at 1.5d, which contradicts all text books Therefore, use d/2)

f_{ctd}	=	**1133**	kpa
d	=	0.765	m
ρ	=	0.00411	
u	=	2.78	

= **1452.16** **KN** **OK**

Project	Residential Building		Date
Description	Footing Design		By
			Chkd

Check one-way Action d = 0.765

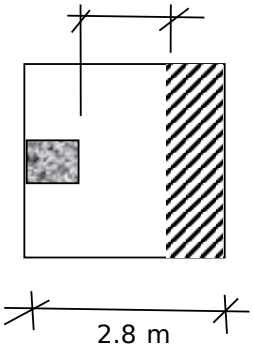

Tributary Area for one-way action

2.8 m

Calculate Shear @ Critical Section

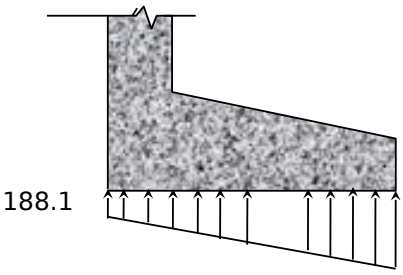

Critical Section From Edge of Footing is	=	1.785 m
Pressure At Critical Section is	=	162.4864 Kpa
Shear At Critical Section is	=	635.5928 Kn

Shear Capacity of Section

$$V_c = 0.25 f_{ctd} k_1 k_2 b_w d$$

f_{ctd}	=	1133		
K_1	=	(1+50ρ)		
		ρ =		0.00411
	=	1.21		
d	=	0.765		
K_2	=	1.6 -d =		1
b_w	=	2.80		

= **731.30 Kn** **OK**

Project	Residential Building		Date
Description	Footing Design		By
			Chkd

Step 3 - Design for Flexure

MAIN DIRECTION

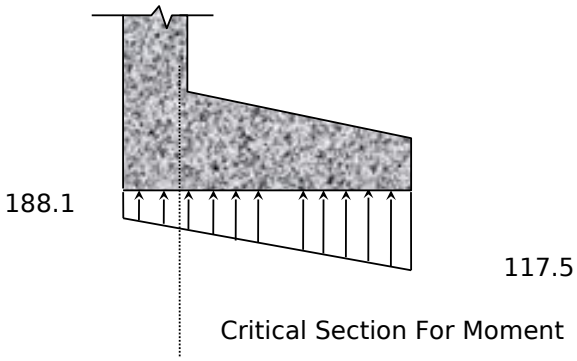

Critical Section From Edge of Footing is	=	2.55	m
Pressure At Critical Section is	=	181.78	Kpa
Moment At Critical Section is	=	451.60	Kn - m/r

Calculate Reinforcement

$$\rho_{req}=\frac{1}{m}\left[1-\sqrt{1-\frac{2mR_n}{f_{yd}}}\right] \quad ; \quad m=\frac{f_{yd}}{f_{cd}} \quad ; \quad R_n=\frac{M_u}{bd^2}$$

f_{cd}	=	13600 Kpa
f_{yd}	=	260870.00 Kpa
d	=	0.765 m
b	=	1.00 m
m	=	19.18
R_n	=	771.67

= 0.0030471

As = 0.00233 = 7.420 Dia 20

Use ϕ 20 @ 100

Project	Residential Building		Date
Description	Footing Design		By
			Chkd

TRANSVERSE DIRECTION

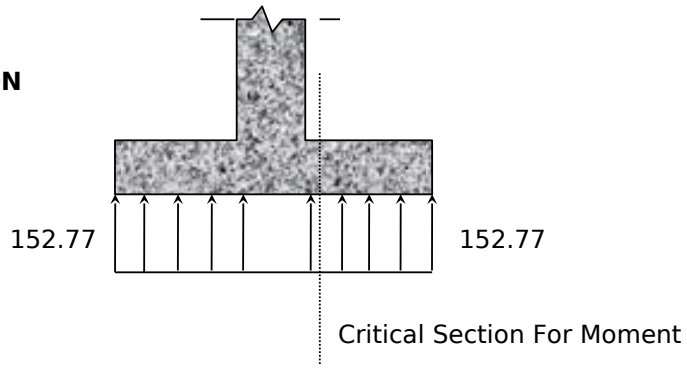

Critical Section From Edge of Footing is	=	1.25	m
Pressure At Critical Section is	=	152.77	Kpa
Moment At Critical Section is	=	119.35	Kn - m/r

Calculate Reinforcement

$$\rho_{req}=\frac{1}{m}\left[1-\sqrt{1-\frac{2mR_n}{f_{yd}}}\right] \quad ; \quad m=\frac{f_{yd}}{f_{cd}} \quad ; \quad R_n=\frac{M_u}{bd^2}$$

f_{cd}	=	13600.00	Kpa
f_{yd}	=	347826.1	Kpa
d	=	0.765	m
b	=	1.00	m
m	=	25.58	
R_n	=	203.95	

= 0.0012500 use min Rho

As = 0.00096 = 8.455 Dia 12

Use ϕ 12 @ 100

DEC,2017

R.A

0.5

DEC,2017

R.A

ɳ

$$R_n = \frac{M_u}{bd^2}$$

bars

DEC,2017

R.A

ɱ

$$R_n = \frac{M_u}{bd^2}$$

bars

Project	Residential Building		Date
Description	Footing Design		By
			Chkd

Service Load = 1243.81 KN

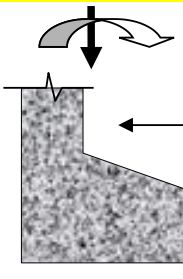

5.15 kn-m

F 1

Col Size 0.3 x

t = 0.9

STEEL S- **400**
CONCRETE C- **30**

d = 0.84

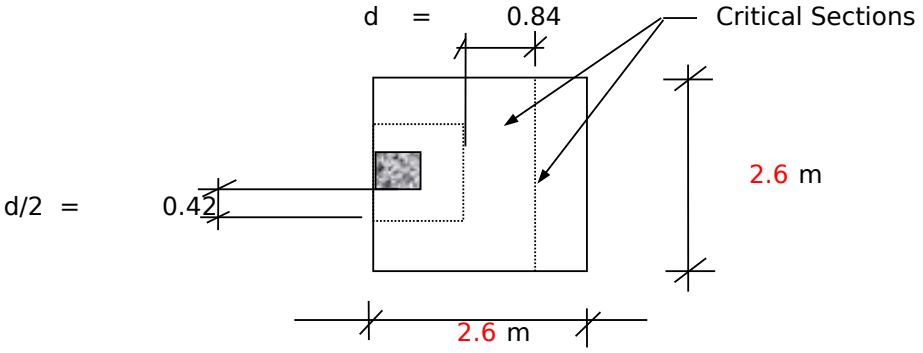

Step 1 - Check Soil Pressure

Pressure from Self Weight of Ftg =	22.5	Kpa	
Bearing Capacity =	**223.42**	Kpa	
Net Allowable Soil Pressure =	**200.92**	**Kpa**	

e = 0.004 < L/6

$$q = \frac{P}{A} \pm \frac{My}{I}$$

$\frac{P}{A}$ = 1243.81 / 6.76 = 184.0 Kpa

$\frac{My}{I}$ = y = 1.3 m; I = 3.81 m^4

= 1.76 Kpa

q =	**185.8 Kpa**	OK	
q =	**182.2 Kpa**	OK	

Project	Residential Building		Date
Description	Footing Design		By
			Chkd

Step 2 - Check Thickness

Check Punching Shear

Ultimate Load= 1430.3815 KN

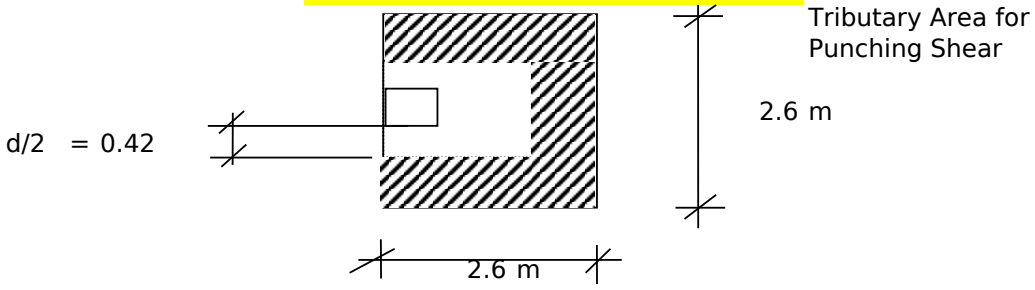

Tributary Area for Punching Shear

Pressure =	211.59	Kpa
Trib. Area =	5.71	m^2
Shear =	1208.46	KN

Punching Shear Capacity of Footing

$$V_{RD} = 0.5 f_{ctd} (1 + 50\rho) ud$$

Assumptions:

As = ϕ **20** spacing **100** mm

Critical Section Occurs at d/2 (Note: EBCS say critical section is at 1.5d, which contradicts all text books Therefore, use d/2)

f_{ctd}	=	**1133**	kpa
d	=	0.865	m
ρ	=	0.00363	
u	=	2.98	

= **1725.44** **KN** **OK**

Project	Residential Building		Date
Description	Footing Design		By
			Chkd

Check one-way Action d = 0.865

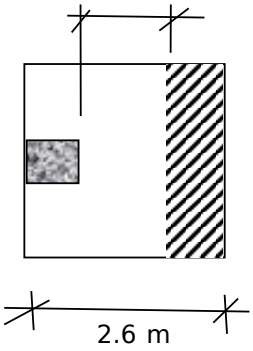

Tributary Area for one-way action

Calculate Shear @ Critical Section

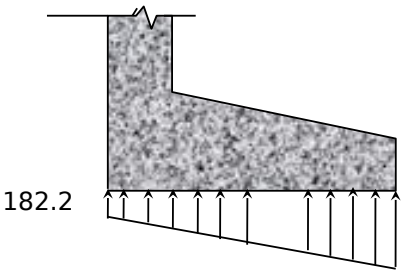

Critical Section From Edge of Footing is	=	1.485 m
Pressure At Critical Section is	=	183.7456 Kpa
Shear At Critical Section is	=	716.2243 Kn

Shear Capacity of Section

$$V_c = 0.25 f_{ctd} k_1 k_2 b_w d$$

f_{ctd}	=	1133		
K_1	=	(1+50ρ)		
		ρ =		0.00363
	=	1.18		
d	=	0.865		
K_2	=	1.6 -d =		1
b_w	=	2.60		

= **752.71 Kn** **OK**

Project	Residential Building		Date
Description	Footing Design		By
			Chkd

Step 3 - Design for Flexure

MAIN DIRECTION

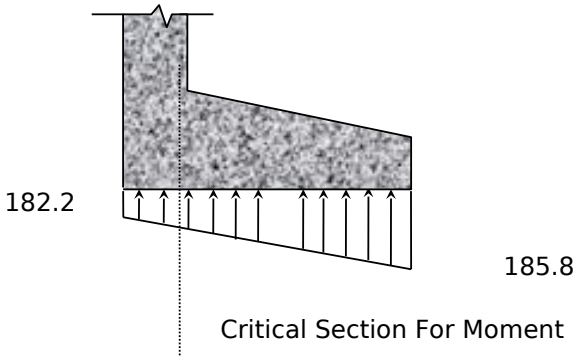

Critical Section From Edge of Footing is	=	2.35	m
Pressure At Critical Section is	=	182.58	Kpa
Moment At Critical Section is	=	509.99	Kn - m/r

Calculate Reinforcement

$$\rho_{req}=\frac{1}{m}\left[1-\sqrt{1-\frac{2mR_n}{f_{yd}}}\right] \quad ; \quad m=\frac{f_{yd}}{f_{cd}} \quad ; \quad R_n=\frac{M_u}{bd^2}$$

f_{cd}	=	13600 Kpa
f_{yd}	=	260870.00 Kpa
d	=	0.865 m
b	=	1.00 m
m	=	19.18
R_n	=	681.59

= 0.0026817

As = 0.00232 = 7.384 Dia 20

Use ϕ 20 @ 100

Project	Residential Building		Date
Description	Footing Design		By
			Chkd

TRANSVERSE DIRECTION

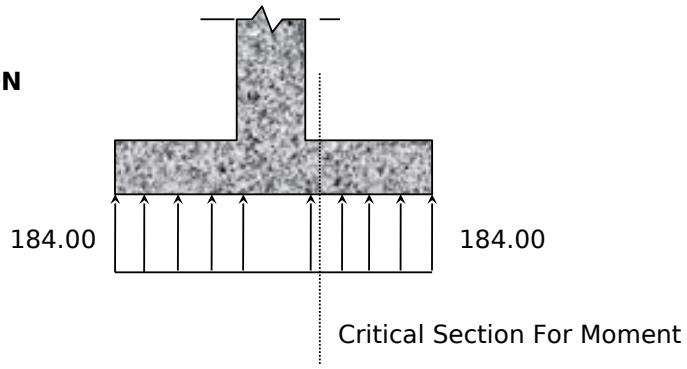

Critical Section From Edge of Footing is	=	1.15	m
Pressure At Critical Section is	=	184.00	Kpa
Moment At Critical Section is	=	121.67	Kn - m/r

Calculate Reinforcement

$$\rho_{req}=\frac{1}{m}\left[1-\sqrt{1-\frac{2mR_n}{f_{yd}}}\right] \quad ; \quad m=\frac{f_{yd}}{f_{cd}} \quad ; \quad R_n=\frac{M_u}{bd^2}$$

f_{cd}	=	13600.00	Kpa
f_{yd}	=	347826.1	Kpa
d	=	0.865	m
b	=	1.00	m
m	=	25.58	
R_n	=	162.61	

= 0.0012500 use min Rho

As = 0.00108 = 7.024 Dia 14

Use ϕ 14 @ 100

DEC,2017

R.A

0.5

DEC,2017

R.A

ɳ

$$R_n = \frac{M_u}{bd^2}$$

bars

DEC,2017

R.A

ɱ

$$R_n = \frac{M_u}{bd^2}$$

bars

Project	Residential Building		Date
Description	Footing Design		By
			Chkd

Service Load = 801.75 KN

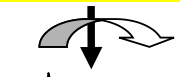

-8.59 kn-m

F 1

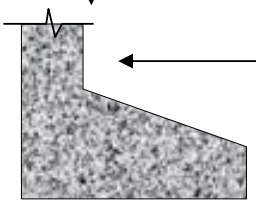

Col Size 0.3 x

t = 0.7

STEEL S- **400**
CONCRETE C- **30**

d = 0.64

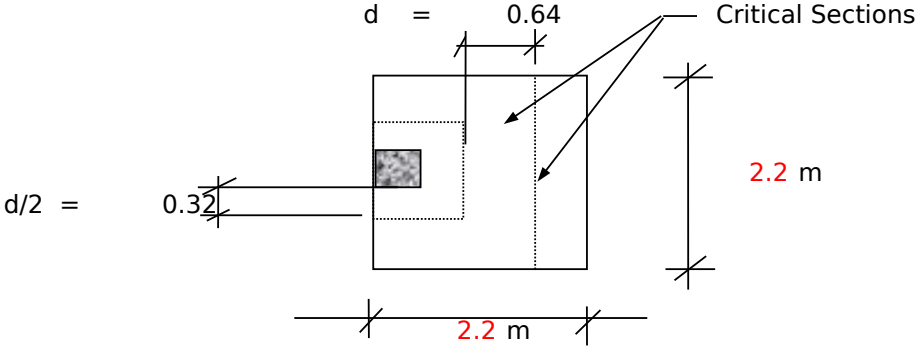

Critical Sections

2.2 m

d/2 = 0.32

2.2 m

Step 1 - Check Soil Pressure

Pressure from Self Weight of Ftg = 17.5 Kpa
Bearing Capacity = **223.42** Kpa
Net Allowable Soil Pressure = **205.92** **Kpa**

e = -0.011 < L/6

$$q = \frac{P}{A} \pm \frac{My}{I}$$

$\frac{P}{A}$ = 801.75 / 4.84 = 165.7 Kpa

$\frac{My}{I}$ = y = 1.1 m; I = 1.95 m^4

= -4.84 Kpa

q	**=**	**160.8 Kpa**	OK
q	**=**	**170.5 Kpa**	OK

Project	Residential Building		Date
Description	Footing Design		By
			Chkd

Step 2 - Check Thickness

Check Punching Shear

Ultimate Load= 922.0125 KN

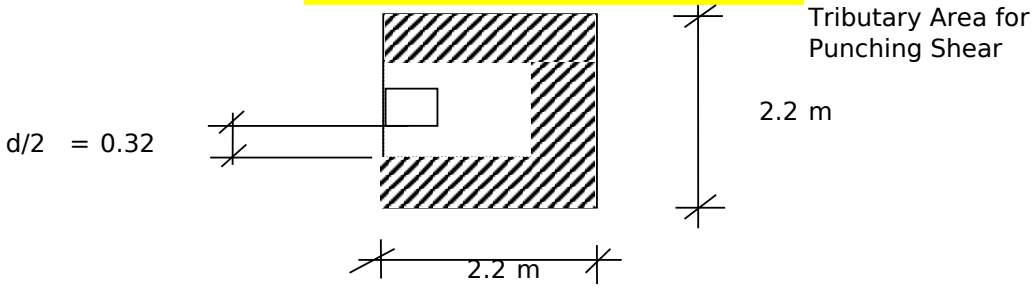

Tributary Area for Punching Shear

Pressure =	190.50	Kpa
Trib. Area =	4.07	m^2
Shear =	775.18	KN

Punching Shear Capacity of Footing

$$V_{RD} = 0.5 f_{ctd} (1 + 50\rho) ud$$

Assumptions:

As = ϕ **16** spacing **100** mm

Critical Section Occurs at d/2 (Note: EBCS say critical section is at 1.5d, which contradicts all text books Therefore, use d/2)

f_{ctd}	=	**1133**	kpa
d	=	0.665	m
ρ	=	0.00302	
u	=	2.58	

= **1118.88** **KN** **OK**

Project	Residential Building		Date
Description	Footing Design		By
			Chkd

Check one-way Action d = 0.665

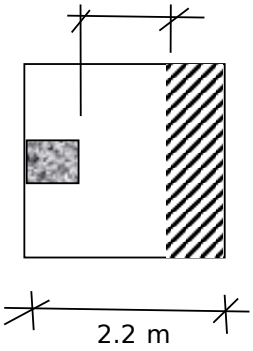

Tributary Area for one-way action

2.2 m

Calculate Shear @ Critical Section

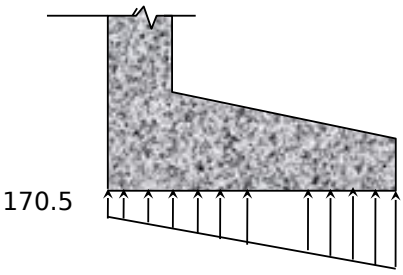

160.8 Kpa

Critical Section From Edge of Footing is	=	1.285 m
Pressure At Critical Section is	=	166.4652 Kpa
Shear At Critical Section is	=	456.9086 Kn

Shear Capacity of Section

$$V_c = 0.25 f_{ctd} k_1 k_2 b_w d$$

f_{ctd}	=	1133		
K_1	=	(1+50ρ)		
		ρ =		0.00302
	=	1.15		
d	=	0.665		
K_2	=	1.6 -d =		1
b_w	=	2.20		

= **477.04 Kn** **OK**

Project	Residential Building		Date
Description	Footing Design		By
			Chkd

Step 3 - Design for Flexure

MAIN DIRECTION

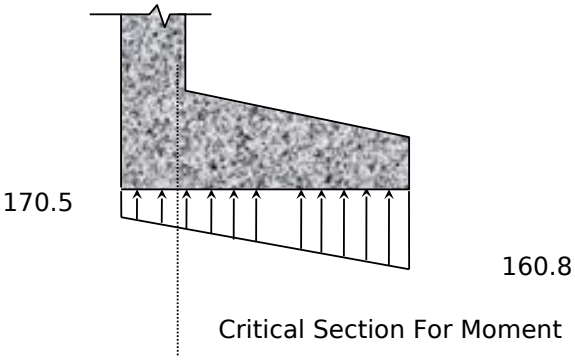

Critical Section From Edge of Footing is	=	1.95	m
Pressure At Critical Section is	=	169.39	Kpa
Moment At Critical Section is	=	311.18	Kn - m/r

Calculate Reinforcement

$$\rho_{req}=\frac{1}{m}\left[1-\sqrt{1-\frac{2mR_n}{f_{yd}}}\right] \quad ; \quad m=\frac{f_{yd}}{f_{cd}} \quad ; \quad R_n=\frac{M_u}{bd^2}$$

f_{cd}	=	13600 Kpa
f_{yd}	=	260870.00 Kpa
d	=	0.665 m
b	=	1.00 m
m	=	19.18
R_n	=	703.66

= 0.0027710

As = 0.00184 = 9.165 Dia 16

Use ϕ 16 @ 100

Project	Residential Building		Date
Description	Footing Design		By
			Chkd

TRANSVERSE DIRECTION

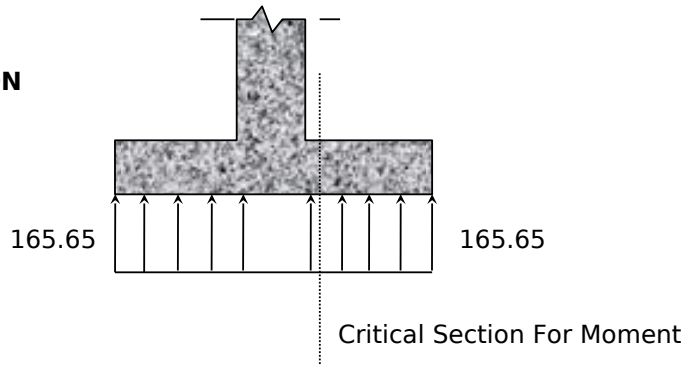

Critical Section From Edge of Footing is	=	0.95	m
Pressure At Critical Section is	=	165.65	Kpa
Moment At Critical Section is	=	74.75	Kn - m/r

Calculate Reinforcement

$$\rho_{req}=\frac{1}{m}\left[1-\sqrt{1-\frac{2mR_n}{f_{yd}}}\right] \quad ; \quad m=\frac{f_{yd}}{f_{cd}} \quad ; \quad R_n=\frac{M_u}{bd^2}$$

f_{cd}	=	13600.00	Kpa
f_{yd}	=	347826.1	Kpa
d	=	0.665	m
b	=	1.00	m
m	=	25.58	
R_n	=	169.03	

= 0.0012500 use min Rho

As = 0.00083 = 7.350 Dia 12

Use ϕ 12 @ 100

DEC,2017

R.A

0.5

DEC,2017

R.A

ɳ

$$R_n = \frac{M_u}{bd^2}$$

bars

DEC,2017

R.A

ɱ

$$R_n = \frac{M_u}{bd^2}$$

bars

Story	Point	Load	FX	FY	FZ	MX	MY
BASE	3554	COMB1	5.65	-0.6	1243.81	3.654	5.146
BASE	3554	COMB2	-47.18	-0.27	847.41	3.558	-106.31
BASE	3554	COMB3	55.65	-0.63	1018.3	1.923	114.029
BASE	3554	COMB4	4.38	-74.1	957.79	206.301	8.148
BASE	3554	COMB5	4.1	73.2	907.92	-200.82	-0.429
BASE	3555	COMB1	5.83	-6.09	924.89	8.982	5.374
BASE	3555	COMB2	-48.01	-4.37	610	7.538	-107.584
BASE	3555	COMB3	56.75	-4.76	777.34	5.935	115.645
BASE	3555	COMB4	4	-80.67	722.17	212.37	5.303
BASE	3555	COMB5	4.74	71.54	665.17	-198.898	2.757
BASE	3556	COMB1	0.22	-0.38	1528.7	3.445	-0.117
BASE	3556	COMB2	-47.41	0.06	1024.56	3.241	-109.415
BASE	3556	COMB3	47.74	-0.63	1268.49	1.926	109.24
BASE	3556	COMB4	0	-64.79	1114.65	197.505	-3.056
BASE	3556	COMB5	0.32	64.22	1178.4	-192.338	2.881
BASE	3557	COMB1	2.51	-5.53	957.8	8.443	2.228
BASE	3557	COMB2	-48.2	-4	612.21	7.18	-110.257
BASE	3557	COMB3	51.97	-4.3	824.49	5.485	113.598
BASE	3557	COMB4	1.31	-63.17	772.23	195.348	-4.167
BASE	3557	COMB5	2.46	54.87	664.48	-182.683	7.508
BASE	3559	COMB1	4.61	-0.26	2553.11	3.459	4.137
BASE	3559	COMB2	-52.75	0.64	1854.42	0.923	-113.67
BASE	3559	COMB3	59.66	-1.03	1975.25	4.265	119.875
BASE	3559	COMB4	3.83	-58.62	1958.73	187.58	7.718
BASE	3559	COMB5	3.08	58.23	1870.94	-182.391	-1.513
BASE	3560	COMB1	3.36	-1.68	2608.56	4.85	2.936
BASE	3560	COMB2	-53.81	-0.53	1897.43	2.071	-115.722
BASE	3560	COMB3	58.85	-1.99	2015.4	5.204	120.126
BASE	3560	COMB4	2.07	-62.27	1859.72	191.194	3.44
BASE	3560	COMB5	2.96	59.75	2053.12	-183.919	0.963
BASE	3561	COMB1	-0.51	-1.23	2418.49	4.409	-0.849
BASE	3561	COMB2	-57.49	-0.03	1789.14	1.581	-120.74
BASE	3561	COMB3	56.73	-1.82	1838.6	5.033	119.467
BASE	3561	COMB4	-1.14	-62.43	1791.59	191.148	-4.25
BASE	3561	COMB5	0.38	60.58	1836.15	-184.534	2.977
BASE	3562	COMB1	-0.44	-1.33	2166.4	4.497	-0.724
BASE	3562	COMB2	-58.85	-0.14	1553.14	1.685	-122.594
BASE	3562	COMB3	58.18	-1.85	1696.47	5.06	121.508
BASE	3562	COMB4	-1.52	-55.64	1714.21	184.26	-7.107
BASE	3562	COMB5	0.85	53.64	1535.39	-177.515	6.021
BASE	3564	COMB1	-3.37	-1.47	1842.26	4.717	-3.873
BASE	3564	COMB2	-62.71	0.17	1352.8	-0.03	-122.627
BASE	3564	COMB3	57.66	-2.37	1410.58	7.106	116.817
BASE	3564	COMB4	-2.1	-64.48	1384.27	188.766	1.713
BASE	3564	COMB5	-2.95	62.28	1379.11	-181.69	-7.522
BASE	3565	COMB1	-3.03	-2.77	1950.44	5.99	-3.479
BASE	3565	COMB2	-64.09	-0.43	1210.19	0.556	-124.974
BASE	3565	COMB3	59.55	-3.72	1715.46	8.428	119.755
BASE	3565	COMB4	-2.67	-67.24	1274.62	191.49	-1.34
BASE	3565	COMB5	-1.88	63.08	1651.04	-182.506	-3.878
BASE	3566	COMB1	-1	-1.47	1884.7	4.717	-1.338
BASE	3566	COMB2	-62.74	0.22	1379.25	-0.08	-125.241

BASE	3566	COMB3	61.25	-2.42	1447.8	7.154	123.235
BASE	3566	COMB4	-1.85	-64.52	1404.17	188.848	-4.937
BASE	3566	COMB5	0.36	62.32	1422.88	-181.773	2.93
BASE	3567	COMB1	-0.73	-3.77	1711.04	6.958	-1.005
BASE	3567	COMB2	-63.86	-1.61	1310.81	1.7	-127
BASE	3567	COMB3	62.77	-4.05	1255.74	8.738	125.493
BASE	3567	COMB4	-2.41	-59.96	1388.46	184.248	-7.957
BASE	3567	COMB5	1.32	54.31	1178.1	-173.81	6.449
BASE	3569	COMB1	-0.31	-2.67	1892.98	5.96	-0.81
BASE	3569	COMB2	-60.38	-0.02	1444.27	-0.986	-120.364
BASE	3569	COMB3	59.91	-3.98	1395.2	9.926	119.149
BASE	3569	COMB4	0.27	-66.48	1393.25	187.644	4.087
BASE	3569	COMB5	-0.73	62.49	1446.22	-178.704	-5.302
BASE	3570	COMB1	0.1	-1.91	1923.14	6.33	-0.926
BASE	3570	COMB2	-121.22	-40.36	-36.17	37.967	-260.724
BASE	3570	COMB3	121.37	37.49	2920.87	-28.472	259.335
BASE	3570	COMB4	-5.19	-64.67	-110.85	226.232	-2.009
BASE	3570	COMB5	5.34	61.8	2995.56	-216.737	0.62
BASE	3571	COMB1	0.41	-1.9	1885.17	5.213	0.077
BASE	3571	COMB2	-61.69	0.18	1448.79	-1.179	-124.189
BASE	3571	COMB3	62.31	-3.03	1378.97	8.998	124.305
BASE	3571	COMB4	-0.77	-65.43	1419.63	186.615	-3.849
BASE	3571	COMB5	1.39	62.59	1408.12	-178.796	3.965
BASE	3572	COMB1	1.25	14.01	1845.19	-10.298	0.974
BASE	3572	COMB2	-62.02	10.42	1332.9	-11.166	-125.421
BASE	3572	COMB3	63.9	10.59	1434.88	-4.282	126.882
BASE	3572	COMB4	-0.76	-47.82	1447.45	169.439	-6.322
BASE	3572	COMB5	2.63	68.83	1320.34	-184.886	7.782
BASE	3574	COMB1	-1.09	-3.56	2443.73	6.938	-1.603
BASE	3574	COMB2	-56.4	-0.41	1870.18	-2.023	-117.131
BASE	3574	COMB3	54.76	-4.93	1795.42	12.43	114.727
BASE	3574	COMB4	-0.87	-66.92	1818.02	184.672	2.978
BASE	3574	COMB5	-0.77	61.58	1847.57	-174.264	-5.382
BASE	3575	COMB1	-1.26	-2.8	2012.85	7.314	-2.267
BASE	3575	COMB2	-131.01	-11.58	2851.27	8.062	-270.53
BASE	3575	COMB3	129.12	7.38	168.01	2.909	267.129
BASE	3575	COMB4	3.92	-50.47	392.86	207.356	6.977
BASE	3575	COMB5	-5.8	46.28	2626.41	-196.384	-10.377
BASE	3576	COMB1	-0.06	-2.39	2420.63	5.797	-0.395
BASE	3576	COMB2	-57.12	0.05	1842.11	-2.474	-120.366
BASE	3576	COMB3	57.04	-3.64	1788.83	11.169	119.774
BASE	3576	COMB4	-0.84	-65.31	1814.66	183.085	-3.945
BASE	3576	COMB5	0.75	61.73	1816.28	-174.389	3.353
BASE	3577	COMB1	0.23	13.65	2336.04	-9.861	-0.044
BASE	3577	COMB2	-58	13.28	1841.01	-15.389	-122.052
BASE	3577	COMB3	58.35	7.19	1663.05	0.598	121.987
BASE	3577	COMB4	-0.79	-47.53	1875.94	165.656	-6.397
BASE	3577	COMB5	1.14	68	1628.11	-180.446	6.331
BASE	3579	COMB1	-1.67	-3.65	1554.31	7.12	-2.164
BASE	3579	COMB2	-48.29	-0.1	1285.17	-4.079	-107.826
BASE	3579	COMB3	45.79	-5.38	1046.29	14.759	104.58
BASE	3579	COMB4	-2.37	-70.07	1145.18	182.179	1.429
BASE	3579	COMB5	-0.13	64.59	1186.28	-171.5	-4.675

BASE	3580	COMB1	-2.03	-2.58	1057.98	6.056	-2.462
BASE	3580	COMB2	-69.55	-0.87	1197.75	-3.317	-129.213
BASE	3580	COMB3	66.5	-2.99	389.22	12.401	125.52
BASE	3580	COMB4	-0.55	-71.75	636.4	183.374	0.771
BASE	3580	COMB5	-2.5	67.89	950.57	-174.29	-4.464
BASE	3581	COMB1	-0.74	-2.97	1545.34	6.459	-1.077
BASE	3581	COMB2	-48.08	0.23	1275.06	-4.397	-110.109
BASE	3581	COMB3	46.97	-4.69	1042.96	14.085	108.493
BASE	3581	COMB4	-0.74	-69.54	1173.69	181.658	-3.802
BASE	3581	COMB5	-0.37	65.08	1144.32	-171.97	2.186
BASE	3582	COMB1	-1.95	-8.73	982.67	12.042	-2.214
BASE	3582	COMB2	-51.59	-4.12	839.45	-0.151	-113.657
BASE	3582	COMB3	48.66	-8.98	634.55	18.215	110.336
BASE	3582	COMB4	-1.67	-68.88	829.12	180.501	-7.133
BASE	3582	COMB5	-1.26	55.78	644.89	-162.438	3.811
BASE	3584	COMB1	5.24	11.99	801.75	-8.593	4.665
BASE	3584	COMB2	-47.93	9.26	528.32	-5.714	-105.526
BASE	3584	COMB3	55.79	8.72	674.31	-7.176	112.524
BASE	3584	COMB4	4.53	-54.64	562.3	186.907	10.693
BASE	3584	COMB5	3.33	72.62	640.32	-199.796	-3.695
BASE	3585	COMB1	2.07	-1.78	2241.9	4.942	1.521
BASE	3585	COMB2	-55.24	-0.13	1588.24	1.674	-114.75
BASE	3585	COMB3	58.34	-2.54	1774.61	5.739	117.031
BASE	3585	COMB4	2.22	-53.13	1596.97	181.891	8.564
BASE	3585	COMB5	0.89	50.45	1765.87	-174.477	-6.283
BASE	3586	COMB1	-3.23	3	1687.57	0.357	-3.794
BASE	3586	COMB2	-62.67	3.21	1299.74	-2.999	-121.457
BASE	3586	COMB3	57.82	1.29	1231.62	3.534	115.766
BASE	3586	COMB4	-1.14	-55.26	1158.81	179.641	5.134
BASE	3586	COMB5	-3.71	59.76	1372.54	-179.106	-10.826
BASE	3587	COMB1	-1.32	9.07	1799.19	-5.484	-1.88
BASE	3587	COMB2	-60.17	7.92	1310.5	-8.732	-119.148
BASE	3587	COMB3	58.19	5.68	1388.28	0.507	116.328
BASE	3587	COMB4	-0.1	-51.2	1286.42	172.681	6.195
BASE	3587	COMB5	-1.88	64.81	1412.37	-180.907	-9.015
BASE	3588	COMB1	-0.55	8.35	2280.75	-4.688	-1.113
BASE	3588	COMB2	-55.08	8.14	1792.9	-10.364	-114.66
BASE	3588	COMB3	54.26	4.38	1628.22	3.333	112.99
BASE	3588	COMB4	-0.55	-51.97	1585.85	169.936	5.784
BASE	3588	COMB5	-0.27	64.49	1835.27	-176.967	-7.453
BASE	3589	COMB1	-3.66	3.14	981.86	0.491	-4.196
BASE	3589	COMB2	-51.26	4.47	834.25	-8.511	-109.067
BASE	3589	COMB3	45.77	0.24	638.54	9.247	102.773
BASE	3589	COMB4	-3.81	-59.96	641.45	171.824	2.407
BASE	3589	COMB5	-1.68	64.67	831.33	-171.087	-8.7
BASE	3590	COMB1	0.69	-0.44	1111.77	3.495	0.295
BASE	3590	COMB2	-48.23	-0.01	715.75	3.299	-108.765
BASE	3590	COMB3	49.26	-0.66	951.9	1.943	109.207
BASE	3590	COMB4	0.07	-70.89	784.09	203.047	-0.516
BASE	3590	COMB5	0.96	70.23	883.56	-197.805	0.958
BASE	3591	COMB1	0.27	1.02	2523.12	2.206	-0.125
BASE	3591	COMB2	-56.15	1.47	1863.01	0.112	-118.638
BASE	3591	COMB3	56.56	0.07	1921.66	3.197	118.451

BASE	3591	COMB4	0.03	-61.04	2003.67	189.891	-0.574
BASE	3591	COMB5	0.38	62.58	1781	-186.582	0.388
BASE	3592	COMB1	-1.8	-0.85	1940.15	4.112	-2.205
BASE	3592	COMB2	-62.5	-0.06	1264.68	0.193	-124.071
BASE	3592	COMB3	59.79	-1.21	1645.55	5.975	120.764
BASE	3592	COMB4	-1.72	-65.89	1599.33	190.171	-2.325
BASE	3592	COMB5	-0.98	64.62	1310.89	-184.004	-0.982
BASE	3593	COMB1	0.02	3.02	1568.95	0.413	-0.369
BASE	3593	COMB2	-62.24	6.06	911.8	-6.905	-123.264
BASE	3593	COMB3	62.28	-1.53	1441.64	7.524	122.71
BASE	3593	COMB4	-0.33	-73.68	1865.73	194.309	-0.922
BASE	3593	COMB5	0.37	78.21	487.71	-193.69	0.369
BASE	3594	COMB1	-0.16	1.79	1802.17	1.701	-0.556
BASE	3594	COMB2	-56.32	2.32	1671.68	-4.675	-117.69
BASE	3594	COMB3	56.08	0.37	1031.58	7.226	116.856
BASE	3594	COMB4	-1.58	-78.21	2091.35	195.081	-2.18
BASE	3594	COMB5	1.34	80.9	611.9	-192.53	1.346
BASE	3595	COMB1	-2.79	-4.02	1030.77	7.459	-3.166
BASE	3595	COMB2	-50.23	0.42	1068.59	-4.567	-110.617
BASE	3595	COMB3	46.05	-6.44	477.56	15.757	105.868
BASE	3595	COMB4	-1.4	-74.39	884.65	185.919	-1.978
BASE	3595	COMB5	-2.78	68.36	661.5	-174.73	-2.771
BASE	3624	COMB1	-0.68	-2.63	1184.73	3.43	-1.869
BASE	3624	COMB2	-128.75	1.38	-150.32	-1.634	-304.998
BASE	3624	COMB3	127.73	-5.33	1927.42	6.779	302.195
BASE	3624	COMB4	-5.49	-53.5	1736.74	82.474	-5.107
BASE	3624	COMB5	4.47	49.56	40.36	-77.329	2.304
BASE	3625	COMB1	-0.09	0.42	1226.44	0.388	-1.314
BASE	3625	COMB2	-74.74	-0.85	2071.22	0.291	-255.907
BASE	3625	COMB3	74.6	1.48	-231.56	0.292	253.935
BASE	3625	COMB4	15.73	-27.41	1428.16	55.387	15.096
BASE	3625	COMB5	-15.87	28.03	411.5	-54.805	-17.068

MZ
-0.019
0.295
-0.324
0.808
-0.837
-0.019
0.295
-0.324
0.808
-0.837
-0.019
0.295
-0.324
0.808
-0.837
-0.019
0.295
-0.324
0.808
-0.837
-0.019
0.295
-0.324
0.808
-0.837
-0.019
0.295
-0.324
0.808
-0.837
-0.019
0.295
-0.324
0.808
-0.837
-0.019
0.295
-0.324
0.808
-0.837
-0.019
0.295
-0.324
0.808
-0.837
-0.019
0.295
-0.324
0.808
-0.837
-0.019
0.295

-0.324
0.808
-0.837
-0.019
0.295
-0.324
0.808
-0.837
-0.019
0.295
-0.324
0.808
-0.837
-0.037
0.573
-0.629
1.57
-1.626
-0.019
0.295
-0.324
0.808
-0.837
-0.019
0.295
-0.324
0.808
-0.837
-0.019
0.295
-0.324
0.808
-0.837
-0.037
0.573
-0.629
1.57
-1.626
-0.019
0.295
-0.324
0.808
-0.837
-0.019
0.295
-0.324
0.808
-0.837
-0.019
0.295
-0.324
0.808
-0.837

-0.019
0.295
-0.324
0.808
-0.837
-0.019
0.295
-0.324
0.808
-0.837
-0.019
0.295
-0.324
0.808
-0.837
-0.019
0.295
-0.324
0.808
-0.837
-0.019
0.295
-0.324
0.808
-0.837
-0.019
0.295
-0.324
0.808
-0.837
-0.019
0.295
-0.324
0.808
-0.837
-0.019
0.295
-0.324
0.808
-0.837
-0.019
0.295
-0.324
0.808
-0.837
-0.019
0.295
-0.324

0.808
-0.837
-0.019
0.295
-0.324
0.808
-0.837
-0.019
0.295
-0.324
0.808
-0.837
-0.019
0.295
-0.324
0.808
-0.837
-0.019
0.295
-0.324
0.808
-0.837
0.04
0.424
-0.364
0.995
-0.934
-0.014
0.214
-0.235
0.587
-0.608