EARLY NORTH ARABIAN *HISMAIC*

A preliminary description based on a new corpus of inscriptions from the *Ḥismā* desert of southern Jordan and published material
Volume I

Geraldine Margaret Harmsworth King

Submitted for the degree of Ph.D.
School of Oriental and African Studies
1990

ABSTRACT

The basis of the study is an edition of 1337 Hismaic inscriptions which were recorded from three sites in *Wādī Judayyid* in southern Jordan in 1986 and 1987. The introductory chapters in Volume I include a discussion of the study and provenance of Hismaic inscriptions and the methodology used for recording the texts; a description of the Hismaic script, an outline for a classification of mixed texts and some remarks about the relationship between the scripts of the different types of Thamudic, Hismaic and Safaitic; a description of some points of the phonology, orthography, grammar and content of the Hismaic inscriptions and a comparison with the content found in other types of Thamudic, Hismaic and Safaitic; a discussion of the names and genealogies found in the inscriptions; a description of the rock drawings which occur in association with the Hismaic texts from *Wādī Judayyid*, a discussion of the distribution of the epigraphic material at the sites and some points that can be made about the relationship between Hismaic and Nabataean. Volume II contains indexes of names, vocabulary and drawings occurring in the edition. The Index of names lists all the names found in Hismaic as well as etymological and comparative material taken from Arabic, Nabataean, Palmyrene and modern Bedouin sources. Appendix 1 lists the provenances of Hismaic inscriptions; Appendix 2 includes re-readings of many of the published texts and Appendices 3-6 give the vocabulary in published texts, the deities, elements in theophoric names tribal names found in the inscriptions. The figures and plates include a map of the distribution of Hismaic inscriptions, a script table, facsimiles of the texts, plans of the sites and photographs.

TABLE OF CONTENTS

VOLUME I

PREFACE

1. INTRODUCTION
    A. The study of Hismaic
    B. 'Tabuki' Thamudic and 'South Safaitic'
    C. The provenance of Hismaic texts
    D. The *Ḥismā* and *Wādī Judayyid* Sites A, B and C
    E. The fieldwork
    F. The edition of the texts and the published material

2. SCRIPT
    A. The forms of the letters
    B. Problems with the interpretation of some letters
    C. The stance and direction of the letters
    D. Letters written in the gaps of the preceding letter and the inversion of letters to form a symmetry
    E. The joining, infilling and embellishment of letters
    F. Similarities between the letters
    G. The direction of the texts
    H. The differences in the letter forms
    I. Hismaic and texts with 'Mixed' features
    J. Hismaic, B, C, D and Safaitic

3. PHONOLOGY, ORTHOGRAPHY AND GRAMMAR
    A. Phonology
        1. *t* and *t̲*
        2. *d* and *d̲*
        3. *z* for /*z̲*/ and /*d̲*/
        4. *w*, *y* and ʾ
        5. Assimilation and elision
        6. The use of *m* for *b*
        7. The use of *n* for *l*
        8. Doubling of the liquid letter *l*
        9. *Tāʾ Marbūṭah*

    B. Orthography
        1. Vowelling
        2. Geminated radicals
        3. *ʾAlif Maddah*
        4. Medial ʾ
        5. Final ʾ

6. The radicals *w* and *y*
7. Suffix *w* and *y*
8. Prosthetic *ʾalif*
9. *ʾafʿal*
10. Mistakes

C. Grammar
1. Verbs
2. Plurals
3. Adjectives and adverbs
4. Pronouns
5. Prepositions
6. The definite article
7. The particles *w* and *f*
8. The vocative particle

4. CONTENT AND STRUCTURE OF THE TEXTS

A. Texts of simple authorship
1. Texts of the form *l* N
2. Texts of the form *w* N *ḫṭṭ*
3. Texts introduced by (a) *w l* and (b) *w*
4. Texts with no introductory particle
5. Texts of the form *w ʾn* N
6. Joint authorship

B. The authorship of drawings
1. Texts of the form *l* N
2. Texts of the form *l* N^1 *w* N^2 *ḫṭṭ* and *w* N *ḫṭṭ*
3. Texts beginning with (a) *w l* and (b) *w*

C. Prayers
1. Invocations using *ḏkr*
2. Invocations using *dʿ*
3. Invocations of the form *h* D.N. *l* N
4. Invocations using *s¹mʿt* and *s¹mʿ*
5. Invocations using *zrʿ*, *s¹b*, *ʾd* and *qdr*

D. Curses

E. Texts expressing emotions
1. Using *rb*/*rbt*
2. Using *wdd* and *nk*/*nyk*
3. Using *ʾn ġr b*

F. Statements relating to hunting

G. Expression of authorship of complex statements

H. Content of Hismaic texts which is not attested among the *Wādī Judayyid* inscriptions

I. Features of content and structure of the texts from the *Wādī Judayyid* sites and those of Safaitic, Thamudic B, C and D

5. THE NAMES
- A. Compound names
  - 1. Theophoric and *Basileophoric* compounds
    - a. The structure
    - b. The elements
  - 2. Non-theophoric compounds
    - a. Names with prepositions
    - b. Names with *ʾbn-, bn-, ʾb-, b-, ʾḫ-*
- B. One-word names
  - 1. Structure of one-word names
  - 2. Explanations of one-word names
  - 3. Non-Semitic names
- C. Individual authors and genealogies
  - 1. Individual authors
  - 2. Genealogies
- D. Tribal names

6. THE DRAWINGS
- A. The inscriptions associated with the drawings and the artists
- B. The subjects of the drawings

7. THE DISTRIBUTION OF THE TEXTS

8. Hismaic AND NABATAEAN AND THE DATING OF THE TEXTS
- A. Hismaic and Nabataean, the writers of Hismaic and the Nabataeans
- B. The dating of the texts

9. THE EDITION OF THE TEXTS FROM *WĀDĪ JUDAYYID* SITES A, B AND C
- Site A
- Site B
- Site C

VOLUME II

INDEXES:

Index of names in Hismaic
Index a: Names and genealogies from the *Wādī Judayyid* Sites
Vocabulary in the texts from the *Wādī Judayyid* sites
Index of drawings

APPENDICES:

1. The provenance of the Hismaic texts
2. Published Hismaic texts
3. Vocabulary in the published texts
4. Deities in Hismaic
5a-b Elements in compound names
6. Tribal names in Hismaic

Bibliography
Abbreviations

FIGURES AND PLATES:

Fig.1	Distribution map of Hismaic
2-6	Script table
7-67	Facsimiles of the *Wādī Judayyid* inscriptions
68-89	Plans of the *Wādī Judayyid* sites
Pls. 1-15	Photographs of the *Wādī Judayyid* sites and of a selection of the inscriptions and drawings

PREFACE

The new corpus of Hismaic inscription contained in this study was recorded in 1986 and 1987 from sites in southern Jordan. I would like to thank the following sponsors who financed the fieldwork: the British Institute at Amman for Archaeology and History; the Central Research Fund (University of London); the Palestine Exploration Fund; the School of Oriental and African Studies (University of London); G.A. Wainwright Fund. I am extremely grateful to Dr. A. Hadidi, former Director General of the Department of Antiquities of Jordan, for granting a permit and for his support for the project. Mr Hugh Barnes did the survey work during both seasons and I am indebted to him for undertaking the task and for drawing up the plans of the sites.

This new body of material has greatly increased our understanding of this little known dialect of Early North Arabian, although the ambiguities posed by the brevity and nature of the texts mean that many of the interpretations offered here will undoubtedly need revising as further material is recorded. The study concentrates on interpretation and description of certain aspects of the inscriptions – the script, phonology, orthography, grammar, content, names, genealogies and associated rock art – and only draws on material from other sources, mainly, features of other types of Thamudic, Safaitic and Nabataean inscriptions, to a limited extent, as a more detailed comparative approach would be the subject of a separate study.

I have not attempted to vocalise any of the names occurring in the inscriptions because of the many possible vocalisations presented by parallel examples and the uncertainty that an alternative, in any particular instance, is the correct one. Less well-known Arabic place names have been transcribed in the Italic type which contains the diacritical marks. I have kept the transliterations used in the publication when quoting Arabic names from other sources.

I am greatly indebted to Dr. A. K. Irvine for supervising my thesis and giving me valuable advice and guidance. I would like to thank Professor A.F.L. Beeston and Dr. K.A. Knauf for reading an initial draft of Chapter 4. Mr Michael Macdonald introduced me to Early North Arabian epigraphy ten years ago. His generosity and encouragement as a teacher inspired me to undertake this study and it would be difficult to express my gratitude adequately.

Whilst writing this study I have relied heavily on my friends and family for moral support. I would particularly like to thank my sister Mrs Victoria Jolliffe, who gave me tremendous encouragement even though her own fields of interest are far removed from mine. My special thanks go to Miss Phyllis Crawford whose support and understanding during more frustrating moments gave me the courage and determination to continue. The study is dedicated to her and to my parents, Michael and Elizabeth King.

Geraldine King
1990

Ch. 1

1. Introduction

A. The study of Hismaic:

Thamudic is the name that has been given to Early North Arabian graffiti, written by nomads, which are found in large numbers in the deserts of Saudi Arabia and the *Ḥismā* desert of southern Jordan. At the end of the nineteenth century and the beginning of the twentieth century, several collections of these texts were made by early travellers to Saudi Arabia – Doughty (1884, Do), Huber (1884 (a) HuI and 1891 Hu and, after Van den Branden 1950 (a), HU), Euting (I, 1896, II,1914 (ed. Littmann, E.) Eut[1]) and Jaussen and Savignac (I-II 1909, 1914, JS) which enabled scholars to tackle their decipherment. In the 1930's a few texts were recorded by Savignac (1934, SSA and 1936, UR) from Jordan and some occur in the plates of Rhotert 1938 (Rh) from Jordan and Saudi Arabia[2].

In 1937 Professor F.V.Winnett edited a new inscription (Meek) and, in the same publication, distinguished, on the basis of script and content, five types within the Thamudic texts which he labelled Thamudic A, B, C, D and E (Hismaic). The present study is concerned with the last type 'Hismaic' which, among the early collections, had largely been found in northwestern Saudi Arabia in the area of *Tabūk*. In 1950 A. van den Branden published a corpus of all the known Thamudic texts with his own classification, in which his type 'Tebouq' more or less corresponds to Winnett's Hismaic but the first major corpus of Hismaic texts themselves was recorded and published by G.L.Harding in (Harding and Littmann) 1952 (TIJ) which contains just over 500 inscriptions in this type of script. These texts were largely found in the *Ḥismā* desert in Jordan, mainly from the area of *Wādī Ramm*[3].

Despite the relative ease of access to the *Ḥismā* in Jordan, nobody attempted to record further large collections of texts until the early 1980's although, following a brief visit, Winnett published a few inscriptions in 1971 (WAM) and a small number of Hismaic texts were published that had been found elsewhere in Jordan, Saudi Arabia and the Negev[4].

---

[1] The complete collection of Euting's copies was not published until 1974. See Jamme 1974(a).

[2] See Pls. XX and XXIX.

[3] Some of the texts copied by Philby and published by A. van den Branden 1956(a) are Hismaic but, because of the generally unreliable nature of the copies, I have not included them in the present analysis except in a very few instances.

[4] Ryckmans, G. 1939 (RyGT 2), Harding 1951 (NST 1), Jamme 1959 (JaS 1), Milik 1958 – 1959 (MNM a-c, inscriptions 1-7), Winnett 1959 (WA 10379, 10386, 10682, 11472), Winnett 1970 (WTI 11), Harding 1972(b) (HE 79), Koenig 1971 (Tdr 9), Clark 1976-1977 (CSP 2, 3i-ii), Naveh 1978 (Naveh TSB C). Several of these texts were not classified by the editors as Hismaic.

During 1979-1980 Dr. David Graf conducted a survey and reports having recorded a few hundred Thamudic texts from the region[5] and, at about the same time, Dr William Jobling started the *ʿAqabah-Maʿān* survey the objectives of which included recording inscriptions and rock drawings within the area[6]. In 1983 Mr David Jacobsen recorded approximately 500 inscriptions at a site below the *Raʾs al-Naqb* escarpment in the north of the region. Except for the texts scattered throughout Jobling's preliminary reports (AMJ)[7] none of these large collections from the *Ḥismā* have been published yet[8], although a small collection was edited by Dr. E.A. Knauf (1985, KnEG), two texts by Dr. al-Muhaysin (1988, MuNJ) and quite a large number of unedited texts appear in the plates and figures of Campetti and Löwenstern 1983 (LAU). Apart from these, from Jordan, several more small collections and individual texts, including an alphabet (KnA), from areas outside the *Ḥismā* were published during the 1980's[9].

In 1986 and 1987 I organized expeditions to southern Jordan during which I recorded 1337 Hismaic inscriptions from three sites, using a systematic approach to the fieldwork. A large section of this study consists of an edition of these new texts but the work is also an attempt to draw together the already published Hismaic texts and to lay the foundations fir a description of this dialect of Early North Arabian.

B. 'Tabuki' Thamudic and 'South Safaitic':

In 1970 Winnett (Winnett and Reed 1970: 70) renamed the class of texts Hismaic as 'Tabuki' Thamudic[10]. I have not adopted this name because, as several authors have pointed out[11], most of the texts in this collection are in fact Safaitic or mixed Safaitic/Hismaic[12] and the term is therefore somewhat confusing[13]. Knauf (1980, 1983,

---

[5] Graf n.d.: 2.
[6] I am grateful to Dr Jobling for inviting me to visit some of his sites in 1983.
[7] See the bibliography under Jobling.
[8] Although Mr David Jacobson allowed me to make copies of the slides he took during his project and I would like to thank him for his generosity. It has been invaluable, whilst compiling this study, to have access to the texts from his site although naturally, since they are not published, they have not been included in this discussion.
[9] Clark 1980 (CTSS), Macdonald 1980 (SIAM 39a-b, 43-44), Macdonald in Kilick 1983: 115 (MU 1), King n.d. (KU 1-2), Knauf 1085 (KnA), Röllig 1987 (RTI), King 1989 (KWM).
[10] He also renamed Thamudic A 'Taymanite', Thamudic B 'Najdi', and Thamudic C and D he placed together under the name 'Hijazi'.
[11] Harding 1972(a): 5; Jamme 1972: 524; Macdonald 1980: 188; Winnett [1982]: 37 n.1.
[12] See Ch.2. § I below.
[13] I have also kept the names Thamudic B, C and D for the other types rather than adopting the terms, 'Najdi' Thamudic and 'Hijazi' Thamudic as the use of artificial names is preferable until we have a more complete description of these dialects. Furthermore, Winnett's distinction between Thamudic C and D is an important one (see, for example, the different graphemes used for /*s*²/ (Thamudic C JS 129, 159 and Thamudic D JS 1, 499, for instance), and the texts should not be classed together.

1985: 204 n.3) suggested the texts should be called 'South Safaitic'. Whilst I would agree with him that the name Thamudic, for any of the texts generally known by the term, is inappropriate[14], I prefer not to use a new name which suggests a particular relationship between Hismaic and Safaitic which, in my opinion, is equally misleading[15].

C. The Provenance of Hismaic texts:

The provenance of edited Hismaic texts is given in Appendix 1 and an indication of the distribution in Fig.1. As pointed out above, most of the known texts have come from the Jordanian *Ḥismā* and a large proportion of the texts from Saudi Arabia were found around *Tabūk*, although we do not know whether similarly high concentrations of the texts exist in that region as well. Elsewhere, small collections and individual texts have been found as far west as the Negev and Sinai, in the south around *Madāʾin Ṣāliḥ* and *Jabal Mismāʾ* to the east and, in the north, around *al-Jawf*. In Jordan, a number of texts have been found in the central and eastern deserts as well as at several places in the western uplands and in areas around Amman.

Evidence from the fieldwork carried out in 1987 clearly indicates that the texts recorded from the three sites were written by nomads local to the area or, at least, by people who returned frequently to it[16]. Many of the isolated finds from other regions were probably

---

[14] The people of *Ṯamūd* from which the name was derived occur in the Quran, *Sūrah*s 7:73, 11:61,68 etc. and are believed to have lived in *al-Ḥijr* (*Madāʾin Ṣāliḥ*) 15:80-84. The name is also attested in the Assyrian annals, Pritchard 1955: 286 (120-125); in Classical sources, for example, Plint, Natural History, VI : 157; in a Nabataean/Greek bilingual inscription from *Rawwāfah*, Milik 1972(a) : 23-58, Bowersock 1975: 513-522 and the name *ṯmd* occurs in two Safaitic inscriptions, WH 3792a *s¹nt ḥrb js²mʾl ṯmd* 'the year that *js²m* warred with the people of *ṯmd*', and WH 3792c *s¹nd js²m ṯmd* 'the year that *js²m* warred with *ṯmd*'. Evidence, however, for a connection between the people in these references and the writers of the Thamudic inscriptions is very tenuous. The only possible occurrences of the name in Thamudic are on Thamudic B, Do XXV 48,2, HU 453, JS 280, 300, 339 (Van den Branden 1966: 17). The interpretation of all these texts is somewhat doubtful. In JS 280 where the *nisbah* ending has been read by most editors (see HIn: 148, for example), the *y* is only a restoration from an incomplete circle. JS 300 *l bʾtr h ṯmd*, usually interpreted as 'By *bʾtr* the *Ṯamūd*' (see Winnett 1937: 33, for example), might equally be translated 'To *bʾtr* belongs the water hole' (cf. Ar. *ṯamad* 'a small cavity or hollow in which rainwater collects'). Furthermore, even if one accepts the references in Thamudic B to *Ṯamūd* there is still no evidence to suggest that the writers of other types of Thamudic also belonged to a tribal group or confederation of that name. See, Ryckmans, J. 1960.

[15] Whilst there are certain features shared by both South Safaitic and Safaitic (cf. Knauf 1985:204 n.3 b), there are several important differences between the script (see Ch.2.J), style and content of the inscriptions of the two dialects, see Ch. 4.I. If the texts are to be renamed it would be better to use a neutral term.

[16] See Ch.7.

written by writers of the script who were travelling outside their usual domain[17] although the lack or paucity of inscriptions in some areas is not, by itself, an indication that an area was only rarely used by the writers of a script[18].

D. The *Ḥismā* and *Wādī Judayyid* Sites A, B and C

The *Ḥismā* desert in Jordan is bordered in the north and east by the northwest/southeast *Raʾs al-Naqb* escarpment and in the west by the granite mountains lying along the edge of the *Wādī ʿArabah*. It stretches southeast into Saudi Arabia beyond *Tabūk* until the basalt areas of *Ḥarrat al-Rahah* and *Ḥarrat al-ʿUwayriḍ*. The area is one of spectacular scenery with isolated sandstone mountains rising steeply form the often wide, sand covered floors of the wadis that divide them. In the west and centre of the Jordanian *Ḥismā*, to the east of *Quwayrah*, the sandstone has largely degraded to base level with only the occasional hill or mountain rising from the plains. The drainage of the region inclines to *Qāʿ Umm Salab* and *Qāʿ al-Disī*, lying in the centre, to the north and north east of *Wādī Ramm*[19]. The temperature ranges from 30°+ in summer to a few degrees above freezing in winter with an average rainfall of about 80mm.

The Hismaic inscriptions can be placed roughly in the Nabataean and Roman periods[20] and archaeological exploration has revealed a certain amount of settlement in the Jordanian *Ḥismā* during this time. At *Wādī Ramm* there is the site of a Nabataean temple, dedicated to the goddess *Allāt*, which can be dated to the first century B.C. and which continued in use until at least 147 A.D[21]. Also found at the site were tombs, and evidence of walls suggesting a fairly large settlement which would have been supplied with water from the numerous springs and the reservoir to the south of the site. Water to the reservoir was channelled down from *ʿAyn Šallālah* where there is a Nabataean shrine with betyls and several Nabataean inscriptions which include dedications to the deities *Allāt*, *al-ʿUzzā*, *al-Kutbā*, and, in a damaged text, *Dušara* and *Baʿlšamīn* as well as

---

[17] As, for example, one finds in the *Ḥismā* itself evidence of travellers from elsewhere in the occasional Minaean texts (Ryckmans, G.: 1934, Graf 1983(a) no.1 and 3); Dedanite (Graf 1983(a) no.2); Thamudic B (AMJ 42); Thamudic D (KJC 435, TIJ 100, 101).

[18] The distribution of inscriptions is of course largely dictated by the availability of inscribable material and in some areas the lack of large numbers of inscriptions is almost certainly a reflection of the geological conditions rather than the extent to which an area was used by the inscribers of graffiti. In the area around *Maʿān* on the Jordanian plateau to the north of the *Ḥismā*, for example, the *Ḥamādah* desert provides very little suitable rock. In 1985 I conducted a survey in the area whilst working for Alistair Killick who was excavating the Roman fort at *Uḏruḥ* and, although the numbers of Hismaic texts were comparatively small, wherever there was a suitable outcrop of limestone there usually were a few texts. The corpus of about 50 texts is unpublished except for KU 1-2, see Appendix 2. For 'Mixed' features in some of these texts, see Ch2.I.(2).

[19] For descriptions of the geology and geomorphology of the *Ḥismā* in Jordan, see Bender 1974, 1975 and Osborn and Dudford 1981.

[20] See Ch.8 below.

[21] See Savignac and Horsfield 1935: 265-268, Starcky 1966: cols. 978-980

several texts asking *Allāt* for the remembrance of individuals[22]. At *Umm Quṣayr* to the southeast of *Wādī Ramm* is a structure of uncertain function with a dam a short distance to the north and three Nabataean inscriptions one of which refers to *ʿAllāt* who is in *Iram'*[23]. At *Biʾr Ramm al-ʿAtīq*, at the northern end of *Wādī Ramm*, are the remains of a dam[24].

In the northwest of the region, lying in the open plain below the escarpment, is the site of *Ḥumaymah/Auara*. The site, said to have been chosen by Aretas III as a result of a prophecy[25], has recently shown to have been a major town in the Nabataean and Roman periods[26]. Running close to the west of the site are the remains of the *Via Nova Traiana* built by the Romans after the annexation in 106 A.D. to link the port of *ʿAqabah* (ancient *Aila*) in the south with the town of Bostra in the Syrian *Ḥawrān*.

At different times growth of both the settlements at *Ramm* and *Ḥumaymah* was probably stimulated by the caravans that crossed the *Ḥismā* to transport merchandise from *ʿAqabah, ʿAynūnah,* further south along the Red Sea coast[27], and *Madāʾin Ṣāliḥ* (*al-Ḥigr*) in the *Ḥijāz*, up to the Nabataean city at Petra and other towns in the north[28]. Clearly connected with the north – south route across the region are the series of watchtowers and small forts that have been found at *al-Kitharah, al-Ḫaldī* and *Quwayrah*, for instance, and along the edge of the escarpment[29]. In the sandstone mountains to the east of *Quwayrah* and elsewhere there are the remains of impressive dams built by the

---

[22] For the description, the epigraphy and excavation of the site and *ʿAyn Šallālah*, see Savignac 1932: 583-590; Rostovtzeff 1934: 402; Savignac 1933: 405-422; Savignac 1934: 573-58; Ryckmans, G. 1934: 590-591; Savignac and Horsfield: 1935; D Kirkbride 1960(b). For the dedications to *Allāt* see Savignac (*ʿAyn Šallālah*) no. 2, *al-ʿUzzā*, Savignac no. 4, 17, *al-Kutbā*, Savignac no. 17 and Strugnell 1959, *Dušara* and *Baʿlšamīn*, Savignac no. 19. For occurrences of invocations to the deities *Allāt*, *Dushara* and *al-Kutbā* in Tham. E, see Appendix 4 and Ch.4.C.

[23] See, Savignac 1932: 590-594, Kirkbride and Harding 1947: 16 and Graf 1983: 655 + 657. cf. also the inscriptions Savignac *ʿAyn Šallalah* no. 1 and Savignac (From *Ramm* temple) no. 1 (Savognac and Horsfield 1935: 265-268) The grid reference of the site on the 1:50, 000 map of Jordan Sheet 3049 II is 383694.

[24] See Kirkbride and Harding 1947: 17-18.

[25] See Musil 1926: 59-60 n.20.

[26] For recent archaeological work, see Eadie: 1984, Eadie and Oleson 1986 and Oleson 1986.

[27] For a convincing argument that *ʿAynūnah* is ancient *Leuke Kome*, see Kirwan 1985. Whether his identification is correct or not, the Jordanian *Ḥismā* would still have provided an important roué for communication between the Nabataean settlement at *al-Badʿ* (*Muġāʾir Šuʿayb*) and Petra.

[28] Depending on the political conditions and the availability of water supplies a large proportion of the caravans from the *Ḥijāz* would have avoided the central Jordanian *Ḥismā* and travelled along the route to the east, more or less equivalent to that of the *Ḥijāz* railway, known in the Islamic period as *Darb al-Šaʾm*.

[29] For a map and recent assessment of these and other sites in the area, see Graf 1983(b).

Nabataeans across the clefts in the rock to catch the run-off water during the winter months[30]. These must have supplied essential water to the caravans passing through the area and probably created a water source sufficient to support a considerable local population as well[31].

The three sites from which the inscriptions were recorded are situated in the north below the *Raʾs al-Naqb* escarpment on the eastern edge of the large drainage system of *Wādī Judayyid* [32]. They are not particularly remote from modern settlements along the desert highway and nor would they have been in antiquity, lying as the crow flies, approximately 20 kilometres from *Ḥumaymah* in the east and 22 kilometres from *Quwayrah* in the southeast. Sites A and B, covering an area of approximately .27 square kilometres each, are both bays cut into the escarpment and Site C, covering an area of approximately .85 square kilometres, constitutes the lower reaches of *Wādī Mīʿzāniyyah*, which flows down from the escarpment, and the rock field that lies between it and *Jabal Mīʿzān* to the west[33].

The geological formation and subsequent erosion has resulted in a somewhat different topography to that found further south in the more spectacular region of *Wādī Ramm*. Along the escarpment, the slopes whilst often steep and sometimes vertical, tend to be broken and jagged and covered in rock fall which, as is the case at these three sites, has often spread considerable distances from the foot of the slopes forming extensive rock fields. In the upper reaches of the sites the rock tumble is often several metres deep with a tendency to thin out away from the slopes. In all three sites there are networks of drainage channels, some of which are extremely deep indicating a run-off from the escarpment during the winter months.

When we were working at the sites in 1987 all three were being used for pasturing sheep and goats by Bedouin camped in the sand covered areas of *Wādī Judayyid* [34]. Occasionally the animals were herded up the escarpment at sunrise and returned at sunset

---

[30] See Kirkbride and Harding 1947: 16-21, Graf 1983(b) 654-657.

[31] I am inclined to agree with Graf 1983(b): 654 that these dams were not built with the sole purpose of providing water for caravans passing through the area.

[32] See Fig. 68. The grid references for the sites on the 1:50,000 map, Sheet 3149 IV, Jibal al-Batra, are, Site A 414135, Site B 415129, Site C 415120.

[33] On the 1:50,000 map the larger mountain to the south is called *Jabal Mīʿzān* but the Bedouin I asked only volunteered the name for the small mountain to the west of *Wadi Mīʿzāniyyah*. As the Bedouin pointed out to me the masculine form of the name is used for the 'male' topographic feature and the feminine for the 'female' one.

[34] The Bedouin today rely heavily on motorised transport which means they tend to camp away from the rock fields and use transported water and supplementary fodder to maintain their flocks. Their use of the region is not, therefore, necessarily indicative of land use in the past. Unfortunately we did not have time to search the vicinity for possible natural supplies of water, although no doubt temporary pools probably form in the warercourses after heavy rains.

so that they could benefit from the grazing on top[35]. Large fauna in the area is now extremely rare but in 1986 in *Wādī Fakhriyyah* the next wadi south of *Wādī Mīzāniyyah* we witnessed a, now illegal, attempt by the Bedouin to shoot an ibex which was interesting in view of the large number of drawings of ibex hunt among the *Wādī Judayyid* material and the reference to an ibex hunt in the inscription KJC 140[36].

E. The fieldwork

The fieldwork lasted for five weeks in 1986 from September to October and for eight weeks in 1987 during the same months. The aims of the first season were to locate and re-photograph the texts recorded by Harding (Harding and Littmann 1952) and Winnett (Winnett 1971) and to find new sites which would be suitable for a systematic and comprehensive recording of the epigraphic material[37].

In 1987 we returned to the *Wādī Judayyid* area to record the inscriptions and drawings at Sites A, B and C. Most of the material at Site A had been recorded in the last week of the 1986 season and we spent a further week completing the work there. We then spent just over a week recording the material at Site B and the remaining 6 weeks at Site C.

The methodology used in recording the material was similar to that employed by Mr Michael Macdonald in recording the Safaitic inscriptions and rock drawings in the Jawa region in northern Jordan (Macdonald and Searight 1982 and 1983 and, see King 1988). The sites were systematically walked across and searched for material; a full and detailed photographic record was made of all the epigraphic finds and a plan was drawn up of the position of the inscribed boulders within the sites. I recorded the material whilst Mr Hugh Barnes undertook the surveying work[38].

In order to search the rock fields systematically, small areas were marked out with cairns and then walked up and down in strips. Each inscribed rock was given a Roman numeral and the inscriptions and rock drawings were numbered separately with Arabic numerals[39].

---

[35] I make this point because, as a visitor to the area, one tends to think of the steep slopes of the escarpment as a divide, but this, of course, is not the case for the local inhabitants.
[36] Two men stationed themselves at the narrowest point of the wadi and waited for their companions to drive the ibex down from the escarpment. We were asked to leave but, since we never heard any gunfire whilst in our camp not very far away, I believe that, fortunately, the animal must have escaped.
[37] During the 1986 season we photographed and copied several hundred new inscriptions from various sites, only a few of which have been quoted in the present study. They have been given the *siglum* H(isma) S(urvey).
[38] The project is greatly indebted to Mr Barnes for tackling the daunting task of planning the inscribed material within these somewhat amorphous rock fields. It was very largely due to his persistence and continuing good humour in the face of considerable difficulties that the results of the project were so successful and I am extremely grateful to him.
[39] The rocks were given individual numbers so that Mr Barnes could work separately from me and was not dependent on my reading and numbering the material before he

Each inscription was copied[40] and all the inscriptions and drawings were photographed in black and white and in colour slides[41]. At these three sites 1900 black and white photographs and 1600 colour slides were taken. Few of these have proved superfluous in the subsequent tracing of the texts and in some cases more photographs would have been beneficial.

Notes were made on the technique of inscribing although to produce a satisfactory study of this aspect of the material it would be necessary to carry out experiments to see how similar results could be achieved. In general, however, quite a large proportion of the texts found at the sites seem to have been indirectly hammered by using a heavy metal instrument as a chisel in order to produce fairly deep careful lines. Others are roughly inscribed by direct hammering with a blunt instrument. We found no texts that had clearly been scratched on to the rocks[42].

A great deal of the sandstone at these sites is covered with a black patina. When the surface is first broken, the rock appears as white and then patinates to orangey, dark brown and back to black. Whilst recording, a note was made of the colour of the patina of an inscription or drawing. However, except where the material is white or black, because of the changes of light throughout the day, it is extremely difficult to maintain a standard description and these notes, whilst useful for general purposes, proved to be too subjective to be of any further use. Furthermore, the rate of patination depends on a number of factors including the chemical constituents of the rock, the exposure of the surface and the depth of the broken surface. The possible variations in the combinations of these three factors mean that inscriptions can be found in any colour within the range and even for relative dating of material on the same surface the patination is sometimes an unreliable guide.

---

could locate it on the plan. Roman numerals were employed so that there would be no confusion between the rock numbers and inscription/drawing numbers. They are, however, cumbersome and using them has not been very satisfactory.

[40] I did not on the whole make copies of the drawings as this would have considerably increased the amount of time spent on recording. In cases where the drawings are clear and simple, a photograph has proved adequate but with the more complicated and worn material a copy is really essential, as it is difficult to interpret details from a photograph alone.

[41] Obtaining adequate photographs of such a large quantity of material is one of the most difficult aspects of recording Early North Arabian texts, particularly in rock fields such as these sites where the material is widely scattered, as it is often necessary to return to different areas at various times of the day in order to get the inscriptions in a satisfactory light. For inscriptions that show up well in shade, an umbrella is a useful piece of equipment. There are certain advantages in sandstone areas such as here, as the glare on the rock is far less than on basalt, on which most of the Safaitic inscriptions are written.

[42] In Safaitic a scratching technique is fairly frequently used, see, for example, WH 718 in Pl.75a of the edition. A few painted Hismaic inscriptions have been found, see AMJ 7, LAU 37-38.

The search for material at Sites A and C was started at the eastern edge[43] and at Site B at the northern edge. In planning the material, where there were high concentrations of inscribed boulders, Mr Barnes laid out a 30 or 50 metre grid which was gradually extended as further finds were made. In the upper reaches of Site B and the central areas of Site C where the material was widely scattered, a plane table and telescopic aledaide were used instead. The time and resources were insufficient to mark contours of the areas but the plans give the relative positions at a scale of 1:1000 and all the distinctive watercourses are marked[44].

F. The edition of the texts and the published material:

368 Hismaic inscriptions were recorded from Site A, 189 from Site B and 820 from Site C. The texts have been prefixed with the initials K(ing) J(udayyid) and the site letter A, B or C. in addition to the Hismaic texts, one Thamudic D inscription was found (KJC 435) and one Nabataean graffito in which the name of the author of KJC 380 is repeated. The rock drawings are prefixed with the Site letter and the abbreviation dr(awing): Adr, Bdr and Cdr. Although all the rock drawings from the sites were recorded, only those on the same surfaces as the Hismaic texts have been included here (see Ch.6.). This means that there are gaps in the sequence of rock numbers and drawing numbers in the edition. Rocks a – h at the end of Site C were found slightly outside the area that was systematically searched.

The index of names in Tham.E lists etymological and comparative material relating to the names. Since it would have been too complicated to include the genealogies as well, there is a second index. Index a. which lists all the names at Sites A, B and C and gives patronyms and further generations. The commentary on the individual texts has been kept to a minimum and mainly concentrates on difficult readings. In cases where a name is not previously attested in Early North Arabian I have simply stated that it is not in HIn (Harding 1971). The reader is not repeatedly referred to the Index of Names but he should turn to that for recurring genealogies and for new or apparently less common names that occur several times at the sites. This will enable him to see whether other occurrences of the names are patronyms and so on.

For repetitive formulae the reader is referred to the relevant introductory chapter. However, a discussion of the translation is given in the commentary of longer texts and those that do not consist of frequently attested vocabulary.

The readings and translations of a large number of the published texts have needed revising and these are listed in Appendix 2[45]. The appendix is not intended to be a

---

[43] The upper reaches of Site C were not systematically searched.

[44] When we returned to Site A in 1987 it proved quite easy, once we had located a particular boulder, to relocate others on the plan by their relative positions.

[45] The re-readings are based on published facsimiles and photographs and unpublished field copies and photographs taken during the 1986 season and during other field trips or visits to museums. Mr Hugh Barnes greatly assisted with copying the texts during the

detailed re-edition of the texts and only gives translations of those that state something more than simple authorship. All the texts of some of the smaller collections are given, even when I have nothing to add to the editor's interpretation. Texts that need re-reading solely on the basis of the re-evaluation of the graphemes ITALICS have not been listed (see Ch.2).

Appendix 3 gives the vocabulary in the published texts and Appendices 4 and 6 the tribal names and deities that are attested in the inscriptions.

1986 season. Mr Michael Macdonald took many of the photographs of the inscriptions found outside the *Ḥismā* and I would like to thank him for giving me prints of these and for lending me other material from his photograph archive.

Ch.2.

2. The Script.

Early attempts at the decipherment of the Thamudic scripts in general were made by D.H.Müller (1893) and Halévy (1901, 1902) and, slightly later, more comprehensive studies were undertaken by Littmann (1904(a)) and Lidzbarski (1908: 23-48, 345-362). The few examples of Hismaic texts in the collections of Huber and Euting on which this early work was based, were considerably augmented by the publication of the inscriptions recorded by Jaussen and Savignac (1909, 1911), although several letters remained unidentified by the editors and no significant contribution was made by Grimme who used some of these texts in his treatise published in 1926(b).

A major advance in work on the script of Hismaic was made by Winnett (1937: 42-48) who established the values of the letters *ḏ, s²*, *ṯ, ẓ* and *n* which had not been convincingly identified by previous scholars. Littmann (1940) discusses the Thamudic script but without classifying the various types and Van den Branden (1950(a)) published a script table in which his group 'Tebouq' more or less corresponds to Winnett's Hismaic. His table, however, is extremely inadequate as he tends to be inconsistent and does not list all the forms of the letters in the inscriptions included in his corpus[1].

The values of three graphemes  ,  and  were not correctly identified until recently. Dr. E.A. Knauf (1983 and 1985) established that the grapheme  represents */g/*[2] and, in a paper I read in 1984 (King 1989), I argued on the basis of some new texts from central Jordan and those already published from the *Ḥismā* that  represents */ṯ/* and  represents */ḍ/*[3].

The re-evaluation of these letters, which is confirmed by the *Wādī Judayyid* texts, means that the script table for Hismaic in Winnett 1937 and more recent publications, Harding and Littmann 1952 (Pl.XXVI) and Winnett and Reed 1970 (P1.1), need to be revised accordingly[4]. In addition, the table in Winnett and Reed where Hismaic is

---

[1] See, for instance, JS 629, 632 where he, incorrectly, reads the grapheme  as *ḏ* but does not list it in the script table and JS 24, 658 *bis* for the most usual form of *ġ* in the dialect which is not listed either.

[2] For a detailed discussion of Knauf's arguments, see Macdonald 1986: 105-107.

[3] See also (King 1988: 312). Jobling in his more recent articles has adopted this interpretation of these graphemes, see Jobling 1986(a): 262. Jamme, however, rejects the identification, see Jamme 1985: 21-31 and 1988: 185-189 and, for instance, his reading of AMJ 79 (= JaT 106R) on p. 207. His translations offer no convincing arguments against it.

[4] And, of course, the readings of the inscriptions that contain these graphemes in these and other publications, including the names occurring in Hismaic that are listed in Harding 1971. Knauf 1983: 587-588 gives many of the instances in which words that need to be re-interpreted on the basis of the new value of  and King 1989: 52-53

termed ‘Tabuki’ Thamudic is misleading because, most of the texts included there are in fact Safaitic or mixed Safaitic/Hismaic[5].

A. The forms of the letters[6]:

ʾ The basic shape is a vertical stroke, sometimes slightly wavy or bent, with a fork at either end. The forks are either two angled lines inscribed centrally on to the stroke (KJA 23, 190) or formed by adding angled or slightly curved lines to the stroke, either on the same side of the stroke (in the direction of the text (KJC 176) or in the opposite direction (KJA 16, KJB 114))[7] or on different sides (KJC 147i). The depth and angle of the forks vary from being deep and acute to different shallow and obtuse. Different shapes of forks occur in the same letter (KJB 78, 124, KJC 84, 147i). The proportional length of the stroke to the size of the fork varies. The fork in KJC 698 appears to be inscribed at a right angle to the stroke, although the letter is damaged and uncertain and also possibly in KJB 106a+. The infilling of the fork in KJC 484 is probably a result of rough hammering.

---

some of the occurrences where they need to be re-interpreted on the basis of the new values of  and . In this study, when quoting names with these graphemes from previous publications, I have not mentioned in, every instance, that the re-evaluation needs to be made but the reader should bear in mind that I have read the graphemes with the following etymological values:

 as /*g*/ (previously read as etymological /*ṯ*/)

 as /*ṯ*/ (previously read as etymological /*ḍ*/)

 as /*ḍ*/ (previously read as etymological /*ḍ*/ or /*g*/)

In instances where  or equivalent forms have been read as /*g*/ then, where the letter is not a mis-reading, see, for example, TIJ 25 and the re-reading in Appendix 2, it should be read as an ʿ.

[5] See Ch.1.B and § I below.

[6] In describing the letters I have distinguished between form, stance and the direction in which they face. In the script tables, Figs-2-6, I have, in the majority of cases, kept the stance as in the facsimiles as this gives a clear picture of the nature of the script. I have drawn an arrow to show the direction in which the text reads. In describing the stance of a letter I refer to how it would stand in a horizontal text. In a vertical text the letters are turned 90° and thus a horizontal text becomes a horizontal stroke or back etc. in a vertical text.

The examples in the script table have been chosen to illustrate the various points in the text and do not necessarily reflect the frequency in which a particular form or variations of it occur. Additional examples not shown in the table are marked with and can be found in the facsimiles. In some cases the letters in the script table are drawn up from larger scale photographs than those on the facsimiles. This means that there are sometimes slight variations in the forms. The examples in the script table should be taken as more accurate. For reasons of space, the texts are labeled JA, JB and JC in the script table although I have used the complete versions of the *sigla* for the corpus KJA, KJB and KJC in the text.

[7] Cf. the formation of the fork in the letters *ṣ* and *h*.

b The letter occurs either as (1) a curve or (2) square shape, with a vertical back and arms at right or obtuse angles facing in the direction of the text. The depth of the curve varies (cf. KJA 8, KJB 83 with KJC 151) as do the proportional lengths of the arms in the square form (cf. KJA 310 with KJC 172, 554). The length of the arms in the same letter are sometimes different (see the first *b* in KJA 46). (3) An angular form occurs in KJC 631a (see another example in KJA 270+).

t The letter is a square cross one stroke of which is usually vertical, the other being aligned in the direction of the text. In several instances the lines of the cross are obscured by hammering or a chip[8].

ṭ There are three forms of the letter: (1) a rectangular grid, with the long side of the grid, vertical. The extended lines of the long side of the grid are sometimes very short or slightly obscured in roughly inscribed texts (KJA 18, 196, KJB 109, KJC 716). A square grid with the lines of the crossbar extending beyond the sides occurs in KJC 443. (2) There are examples where there are three (KJA 230, KJC 750) or four (KJC 744) crossbars giving the letter the appearance of a ladder[9]. (3) A square or rectangular shape with four rays added at each corner (cf. Harding and Littmann 1952: 3 and Pl. XXVI under *ḍ*). This form is not well represented among the *Wādī Judayyid* texts although KJA 37, KJB 30, KJC 24, 236, 321 and 410 were probably inscribed in this way.

g A vertical stroke with a circle or loop at either end. The circle or loop is either inscribed centrally on to the stroke (KJA 352) or to one or other side of the stroke (KJA 355) using part of the stroke to form it[10]. The proportional size of the circle to the length of the stroke varies. An example of the letter with a short stroke occurs in KJC 147e, whilst in KJA 128 and KJC 122a ? the stroke is practically non-existent, giving the letter the appearance of the numeral 8. The stroke of the letter is not always straight, see, for instance, KJC 71+ and 760.

ḥ There are two forms of the letter[11]: (1) three sides of a rectangle (KJC 147j, for instance) or a curve (KJC 605, for instance) with a line running through the middle, extended to form a tail. The proportional length of the back and the arm varies (cf. for instance, the letters in KJC 25, 271 with that in KJC 699). The arms are sometimes inscribed at obtuse angles to the spine (see KJC 304). The length of the tail varies and when it is very short can easily be missed in reading the letter. Clear examples of tailless letters occur in KJB 73 and KJC 487. (2) three prongs with a straight tail, formed from a central line with the outer arms angled towards it and facing in the direction of the text (KJC 10, 202, 402, 566). The length of the tail

---

[8] This might be because a rough, inaccurate technique was used in inscribing the letters (see KJA 193, KJC 43), in others it is most likely the rock has flaked away as a result of the addition of the second line of the cross (see KJA 74+, 130+, KJC 296, 348+, 668+)

[9] See § E.3. n. 69 below.

[10] cf. the formation of the circle in the letter *ṣ* and that of the fork(s) in *ʾ*, *ṣ* and *h*.

[11] The difference between the two forms is essentially the same as that between the two forms of *ḍ*, see below.

varies. In KJC 202 it is proportionally long[12]. The tail of the letter is bent in KJA 256+, 344, which is of form (2) and in KJC 470 which is of form (1)[13]. An unusual form of the letter occurs in KJC 272 where the letter has a horizontal stance in a vertical text and the tail is hooked and attached to one of the outer arms.

ḥ The letter is typically a straight line with a curved one inscribed across (KJC 48, 155,471, one of the *ḥ*'s in KJC 539), although sometimes both of the arms are curved (KJB 112). The obtuse junction of the two lines usually faces in the direction of the text. In KJA 161 the letter seems to have been formed by inscribing a straight line and then adding a curved line to one side[14].

d A vertical or slightly curved spine with (1) a squared or (2) a rounded loop attached to the middle. The lines of the loop do not usually protrude beyond the spine, although an instance occurs in KJC 205. The proportional size of the loop to the spine varies, exaggeratedly large loops occurring in KJB 79, KJC 241 and KJC 589+. The spine is sometimes bent away from the loop (KJC 114). (3) A form in which the ends of the spine are bent in the direction of the loop (KJA 310+, KJC 205, 631a). (4) A different version of (3) with, on the whole, a more rounded loop and longer hooks at the end of the spine occurs in KJA 36, 179 and KJC 202 (see § H.3 below). One of the letters in KJC 202 and the letter in KJC 436, 453+ has the complete spine bent in the direction of the loop. Most frequently the loop faces in the opposite direction to that of the text although there are several instances where it faces forwards (KJA 26, KJB 179, KJC 114, 140, 202, 631a), and there are variations in the direction of the loop in the same text (KJA 36, KJC 123)[15] .

ḏ There are two basic forms of the letter[16]: (1) A square or rounded back with three (KJB 96b), four (KJA 14 etc.) or five (KJA 44 etc.) arms and a tail, which is usually curved at the end but not always (KJC 28, for instance). There are clear instances (KJA 49, KJB 72, 171, for example) where the tail and one of the arms are a continuous line[17] with the back of the letter inscribed across it and then the additional arms added to the back. In KJC 260 both *ḏ*'s have tails that are completely bent over to one side. (2) A central tail line with slightly curved or angled arms drawn across it at different points (KJA 36 (the fourth *ḏ* in the text), KJC 212, 272, 641). (3) In KJA 231 there is a form of the letter which combines both forms of the letter, i.e. a back with arms attached, has been inscribed across a central tail line and an additional arm has been inscribed further down the central line. Forms (1) and (2) of the letter occur in KJA 36.

---

[12] See below under § H.3.
[13] The name of the author of both KJA 344 and KJC 470 is *mḥllt*.
[14] The interpretation of the text is doubtful although the reading is clear.
[15] Letters with forward facing loops seem to be the most frequent in Safaitic and Clark 1983: 73, under *d*, says the backward facing *d* (he describes it as the reversal of the stance) is a Thamudic trait but this is much too generalized. Whilst a large number of the *d*'s in Thamudic C do face backwards, in Thamudic D and C there seems to be quite a lot of variation between the two directions.
[16] cf. the forms the two forms of *ḥ* above.
[17] In letters with four arms this is either one of the two inner arms or, where there are five, the middle arm (KJC 115).

r The letter is either (1) a small curve (KJA 43, KJA 292 etc.), a proportionally larger curve (KJA 133, for instance) or (2) a square shape (KJB 106, KJC 25, for instance) with the arms facing in the direction of the text. The depth of the curve varies (cf. KJC 66 and KJC 761, for example) and similarly the proportional length of the arms to that of the back varies in the square form of the letter (cf. the second *r* in KJA 294 with the letter in KJC 103). In KJC 433 the lengths of the arms are different. (3) An angular form occurs in KJC 403.

z The letter is either a vertical or horizontal stroke (cf. KJA 6, 25 with KJA 36, 341, KJB 105, for example) with a line at either end. The stroke is slightly bent in KJA 36 and KJC 188 and the end lines of KJC 147b have a slightly forked appearance. The end lines are usually shorter than the central stroke, although in KJA 310 they are approximately the same size, giving the letter a square appearance[18], in KJA 341 they are slightly longer and in KJC 84 considerably longer. In KJA 36, KJB 105 and KJC 641 the lines are different lengths but one at least is proportionally quite long in comparison with the stroke[19].

s[1] The letter is either (1) a curve (KJC 139, for instance), (2) a square shape (KJA 353, KJB 100) or rectangular shape (KJC 46, 275) with a tail, (3) an acute (or almost obtuse (KJC 735)) angle, either without a tail (KJA 49) or with a more or less distinctive tail (KJB 1, 178). The angle is often formed by the addition of an angled (KJA 23) or a slightly curved line (KJB 17) to a straight one at varying distances from the end and thus producing a longer or shorter tail. The arms of the letter face in the direction of the text except in a few instances (KJA 17+, KJB 47 KJC 46, 649). In KJB 179 and KJC 202 the letter has a proportionately long tail[20].

s[2] The letter is (1) a vertical straight stroke (in some cases the line is slightly bent (KJA 16, 226,190)) or, in a few cases, (2) a squiggly line (KJA 105, KJB 1) as in Safaitic, and a slightly different type occurs in KJC 46 where the squiggles, which are not very pronounced, do not continue along the length of the line.

ṣ The letter is a vertical stroke with a circle, loop or squared shape (KJC 180) at one end and a fork at the other. The circle is attached centrally on to the end of the stroke (KJA 21, KJB 59) or on to one side (KJA 46, KJC 27). In some instances the stroke is probably used to complete the circle or loop (KJC 292, for example). Similarly, the fork is either added centrally on to the stroke (KJB 59,89) or formed by attaching a line at an angle (KJA 16), a slight curve (KJB 76, KJC 292) or an angled shape to the stroke[21]. The stroke is sometimes slightly bent (KJC 180, 515, 565) and its length proportional to the size of the circle and fork varies (cf. KJB 59

---

[18] The text is neatly inscribed and several of the letters are more or less squared.

[19] Many of the instances of the proportionally long lines occur when the stance of the stroke is horizontal suggesting that the slight increase might result from a tendency to adjust the height of the letter to make it a comparable size to that of the other letters in the text (cf. the comments on *ẓ* below). The grapheme  under *z* in the script table in Harding and Littmann 1952: Pl. XXVI is from the Safaitic text TIJ 499. The grapheme read /*z*/ in WAM T 60 is a /*ẓ*/, see under *ẓ* below and Appendix 2.

[20] See § H.3 below.

[21] cf. the formation of the circles of the letter *g* and the forks of *ʾ* and *h*.

with KJB 89, for example). The circle occurs at both the bottom and the top of a horizontal text[22].

ḍ The letter is formed from two concentric circles or approximations to circles. The relative sizes of the circles varies (cf. the relatively small inner circle in KJA 23, 246 with the larger one in KJA 247). In KJA 138, 321+, KJB 111, KJC 507+ the inner circle is a hammered dot[23].

ṭ The letter is most frequently (1) a straight vertical back with three arms (KJA 83 etc.) but also occurs with (2) a curved back (KJC 174, for instance). In some cases there is no back and the arms are joined at one point (KJC 586, for instance). The proportional length of the back to the length of the arms varies (cf. KJA 263 with the letters in KJB 148, for instance). The arms of the letter are usually at a right angle to the back but there are exceptions (see KJC 362, for example, where the angle of one of the arms is obtuse).

ẓ Because of the most frequently attested stance of this letter at these sites it is perhaps most accurate to describe it as a vertical stroke with a horizontal line protruding at a right angle from the centre, either in the direction of the text (KJA 83, 88, 138 etc.) or away from it (KJC 291, 716, 721)[24]. The horizontal line, when the letter has this stance, is approximately the same size as the vertical stroke or else rather shorter. In five instances (KJC 133, 171, 341, 528, 583a) the stroke has a horizontal stance[25] and the central line is vertical. In four of these texts (KJC 133, 171, 528, 583a) the central line is proportionally longer than that of the stroke[26].

ʿ The letter is basically a circle or oval of varying degrees of regularity. The relative height of the letter to the other letters in the text varies. In some instances it is very much smaller (see KJB 81, for example). In KJA 64 and KJC 210 the letter has

---

[22] See § D.2 below.

[23] cf. under ʿ and see n. 27 and § E.2 and n. 69.

[24] The examples of this letter are too few at the moment to say whether this stance is in general the most frequent one. Furthermore, some of the examples are in texts possibly written by the same person (*ẓ ʿnt bn slm* KJA 88, KJC 295 and KJC 749; KJC 133, 490 and 505 are possibly by the same person *yẓr* and KJC 528, 583a possibly the same person *ḥfẓ*) and so to sample, to a certain extent, might be biased. It is interesting, however, that this is the stance of the letter in the inscribed alphabet KnA. The grapheme was read /*z*/ in WAM T 60 but it is /*ẓ*/, see Appendix 2.

[25] All these texts are written vertically or diagonally and therefore the stroke is in fact vertical but if they were laid horizontally the stroke would be horizontal (see n.1 above) i.e. T .

[26] The letter in JS 702 (a copy), KWM 7 and WAM T 60 also has this stance and in all of them the central stroke is proportionally long. These examples suggest a tendency to lengthen the central line when the letter has this stance to make the height of the letter more or less similar to that of the others in the text i.e. the proportional lengths of the line and the stroke are to a certain extent related to the stance. cf. the letter *z* above.

a dot in it[27].

ġ The letter has the form of a vertical back and two arms with a tail, which is usually hooked (KJA 24, 229) or curving (KJA 28, KJC 674)[28]. The tail is either (1) continuation of one of the arms (KJA 23, 34, KJC 759) or else (3) added at the corner of the back and one of the arms (the first *ġ* in KJA 83, for instance)[29]. The proportional length of the tail varies, depending on the distance between the arms of the letter. In KJA 97, 105, for example, the tails are proportionately long. A form with a rounded back and the tail attached slightly along one of the arms occurs in KJC 120 (see also the second *ġ* in KJA 83+) and KJA 123 has a hook that curls back to such an extent that it forms a loop.

f The letter is a vertical wavy line with three undulations. Three typical forms occur in KJA 23, (1) the central undulation might be rounded, (2) flat or squared or (3) one or more of the undulations might be angular. Usually the concave face of the middle undulation faces in the direction of the text, although that is not always the case (see KJB 179, KJC 585, 733, for instance). An exaggeratedly deep middle undulation occurs in KJA 113. The undulations are sometimes indistinct, often because the technique of inscribing is rough hammering. KJC 472 lacks a third undulation (see also KJA 174+, the first of the *f* 's of the text). KJB 44 and KJB 53 are long, slightly wavy lines[30].

q The letter is (1) a circle, oval, rectangle or an approximation to those shapes, with two lines, vertical in the text, protruding opposite to each other on either side (see KJA 49, 304, KJB 67 etc.). (2) The lines are also inscribed as one continuous line dissecting the circle, oval etc. and protruding on either side (KJA 20, 25,27,31 etc.).

k A vertical back with two arms, facing in the direction of the text, and a straight tail. The tail is formed either as (1) a continuation of the back (KJA 4,6 etc.), (2) a

---

[27] An example also occurs in WAM T 27. In the Hismaic texts from the *Wādī Ramm* area, Winnett ([1982]: 30-31) reads the grapheme ◎ as *w* in TIJ 47 and 212 and *g* in TIJ 58. In all these texts I would read it as ʿ, see Appendix 2. The sign ◎ in this script also represents etymological /*ḍ*/ although in the examples here and in Harding and Littmann 1952 the letters are distinguishable by their size, the ʿ being smaller relative to the other letters in the texts. See under *ḍ* and see § E.3 n.69. Winnett [1982]: 15-32 discusses the value of the sign in other types of Thamudic and mixed Safaitic/Hismaic texts (HU 2, JS 596) where he gives it the value *w*. However, as he points out (32), there are often discrepancies between the copies of Huber and Euting, and, although Winnett's identification of the value of the letter is almost certainly correct for most of these texts, the form of the grapheme must remain doubtful until we have photographs.

[28] The lack of a hook or distinctive curve in KJC 459 is probably a result of rough or inaccurate hammering.

[29] Similar variations occur in the letter *k*, see below.

[30] Letters with more than three undulations occur in AMJ 148 and possibly in the patronym of CTSS 1a, see Appendix 2.

continuation of one of the arms (KJC 39, 406, 553[31]) or else (3) attached to a corner of the back and one of the arms (KJB 7, KJC 60)[32]. In some cases the arms are wide apart, leaving only a proportionally short tail (KJC 38, 457, 458 etc.), and, in others, the reverse is the case (KJC 202, 272, for instance). In KJA 258+ and KJC 312 the letter is (4) a curve with the tail protruding from the side, similar to the form of the letter in Safaitic and in some Thamudic C texts[33]. A badly formed version of the letter occurs in KJC 52+.

l The letter is most frequently attested as (1) a vertical stroke with a hook at one end. The proportional length of the hook varies (cf. those in KJA 11, three of the *l* 's in KJA 36 and two of the *l*'s in KJC 641). In some cases the hook is virtually the same length as the stroke, see KJC 695, for example, whilst in others it is nothing but a slight nick from the rock and can easily be missed when reading or copying a text. There are examples of the letter with a deeply curved hook (see, for instance, the second *l* in KJA 354). There are also, clear examples of (2) completely straight strokes similar to the letter in Safaitic, see, for instance, the first letter in KJA 344 (the other *l* 's in the text are hooked), KJB 149 and KJC 446. The lack of a hook sometimes seems to be compensated for by making the letter slightly curved (see KJA 21 and the second *l* in KJB 149, for instance). There is a clear example of the letter as a smallish curve in KJC 236 and instances where the letter is bent (see KJC 241, 594, for instance). The stance of the letter is almost invariably vertical, although there is an exception in KJC 11 and possibly in KJA 337+[34]. The hook usually faces in the direction of the text, although exceptions occur, see, for instance, the last letter in KJC 140. The hook occurs at the top or bottom, see § D.2 below.

m The letter occurs in (1) square (KJA 26 etc.), (2) rounded (KJA 46, 74 etc.) and (3) elongated (KJB 7) forms with the indentation facing in the direction of the text. The depth of the indentation varies (for shallow examples, see KJC 29, 79, 499). In KJC 439 the letter is a rectangular shape with no indentation. A 'pinched' version of the letter occurs in KJC 632. Sometimes a line joins the inner and outer lines of the letter (see KJC 768, for example)[35]. There are examples of the letter where (4) the inner and outer strokes are not joined at the ends (see KJA 309+, KJC 332, for instance) and cases where (5) the letter is joined at one end but not at the other (see KJA 46[36], for example). The inner line of the letter in KJA 302 does not appear to have been completed[37] and the letter in KJC 614, in addition to having no indentation, has a line across it which gives it the appearance of a *w*. An anomalous form, where one of the arms bends down occurs in KJC 271. The indentation usually faces in the direction of the text but an exception occurs in KJC 253+, 509 where it faces backwards and in KJC 13 + where it faces down (see E.1.n.59).

---

[31] Many of the examples of this form of the letter occur in the name *knn* but not all of them, see KJC 15+ and 39, for instance.
[32] See under *ġ* for similar variations of the form.
[33] See JS 119, 123, for example.
[34] The reading of the letter is unclear on the photograph.
[35] This is often because a rough hammering technique has been used.
[36] Both here and in KJA 309+ there are also completely joined forms of the letter, see § H.2.
[37] cf. the letter in some mixed texts, § I (1) and WTI 16, 20, 55.

n The *n* is a dot or vertical dash, usually small in relation to other letters of the text. In a few instances the dash is a horizontal line (see KJC 485, 510, for example).

h The letter is a vertical stroke with a fork at one end. In some instances the fork appears to be placed centrally on to the end of the stroke, and in others formed by adding a slight curve (KJC 211, for example), square shape (KJA 351, for example) or angled line (KJA 108, for example) to the stroke[38]. The angle of the fork is usually acute but can be obtuse (see KJC 352, for example). A somewhat rectangular form occurs in one the *h*'s in KJB 18. The proportional length of the fork to that of the stroke varies (for instance, see KJB 116 where the forks are small and the strokes long). Different lengths of the prongs of the fork occur in KJC 46, 84[39] and in KJC 718.

w The letter is basically a circle, oval (one of the *w* 's in KJC 48, for instance) or a square (KJC 30, for instance) with a line going either horizontally or vertically across the centre. The letter occurs with a cross in the middle of the circle in KJC 408[40].

y A stroke with a circle or a loop at one end. As with the letters *g* and *ṣ*, the circle is either placed centrally on the end of the stroke (KJA 6 etc.) or formed by adding a curve on to one side of the stroke near the end (KJA 20 etc.). The length of the stroke in proportion to the size of the circle varies, although quite a distinctive feature of this script is a relatively large circle and a short stroke. The stroke usually has a vertical stance but there are instances where it is diagonal (one of the *y* 's in KJA 36) and horizontal (KJA 245, KJ8 91+, for example). A letter with an incomplete circle occurs in KJC 300.

B. Problems with the interpretation of some letters:

In some instances certain letters have a form which is similar to another letter and is therefore difficult to identify with certainty unless the context is clear[41]. The *ḥ*, for example, when it does not have a tail resembles a *t*; the *ḫ* in some cases is similar to an *ʾ* and in others to a *t*; the *f* can resemble the squiggly form of *s²* and *l* without a hook might be mistaken for the straight form of the letter[42]. The most problematic are the letters *b* and *r*. A glance at the script table shows that the shapes and variations of the two letters are very similar. Usually the letters are fairly clearly differentiated by size, the *b* being larger than the *r* and about the same size as the other letters but when

---

[38] Cf. the formation of the forks of the letters *ʾ* and *ṣ*.
[39] See § H.3 below.
[40] See § E.3 below.
[41] See Harding and Littmann 1952:3 for similar remarks under *ḫ* and *ṭ*.
[42] See *ḥ* in KJB 73, KJC 487, for instance; for an example of the letter *ḫ* which resembles an *ʾ*, see KJC 336 and for an example resembling *t*, see one of the *ḫ*'s in KJC 539 (usually the stance of the letter helps distinguish it from *t*); for examples of *f* which resembles a squiggly form of *s²*, see KJB 44 and 53; in one instance the letter *k* with the tail bent forwards resembles a *ṭ* (KJC 590). In all these examples there is sufficient context to make the reading certain.

this distinction is not made problems arise[43].

The joining up (see § E.1) of the forks of the letters ʾ and ṣ gives the ʾ the appearance of a ṣ when only one fork is enclosed and the ṣ the appearance of *g*. When both forks of the ʾ are joined it also resembles a *g*. Usually, however, the line joining the fork is shallower.

There are many examples of texts that have been started and left unfinished[44] and in some cases the last letter has not been completed[45]. In cases where it is obvious that this is what has happened, problems do not occur but if only a straight line or dash of the unfinished letter has been inscribed, then it might easily be read as a s^2 or a *n* (or possibly a *l*)[46].

C. The stance and direction of the letters:

1. The stance of the majority of the letters is fairly consistent, although variations do occur[47], some of which seem to be associated with a change in the direction of the text[48]. There are comparatively frequent variations between the use of a horizontal and vertical stance of the letters *z* and ẓ[49].

2. Similarly, the direction in which the letters face is on the whole consistent, although variations are attested[50] and sometimes both directions of the letter occur in

---

[43] See, for instance, the proportionally large *r* in KJB 53; the last letters in KJA 247+ and 273+, the second letter in KJC 318+ and the penultimate letter in TIJ 316 (Harding and Littmann 1952: 33) which might be read as either a *b* or *r*.

[44] See, for example, the instances on Rock d, KJC 738a, 738b, 738c, 744a etc.

[45] See, for instance, KJB 115a where the second letter is probably an unfinished *m*; KJC 50 where there is an unfinished *g* and KJC 511 where the last letter is an unfinished ṭ.

[46] That the line is not a letter is, in most cases, impossible to prove but a clear instance occurs in KJC 649 where the dash at the end must be the line of an unfinished *t*; KJA 153 and KJB 113 are most probably unfinished and I think one should bear in mind that this might be the case with KJA 342, KJC 97b, KJC 187b, 413, 583, 601 which I have read as *l* ns^2, *l* bs^2, *l* bs^2, *l* ms^2, *l* $ʿs^2$, *l* bs^2 respectively. See also the commentary under KJC 163. If the line is horizontal (see KJB 141 and KJB 556) then, although unusual stances of letters do occur, the most probable interpretation is that it is an unfinished text.

[47] See *t* in KJB 112; ḥ in KJC 264; ḫ in KJC 144; s^1 in KJB 47; ġ in KJB 123; *l* in KJA 337, KJC 11; *m* in KJA 72; *y* in KJ 245, KJB 91, for instance. In TIJ 163 the first word of the text is written with a horizontal stance and the rest of the letters except *q* are written with a vertical stance in a horizontal text. For KJC 46 and 84, see § H.3.

[48] See the *r* and *t* in KJA 69; *t* in KJA 181; ḫ in KJB 155; the word ḫṭṭ in KJC 754, for instance.

[49] Harding and Littmann 1952: 3 notes that *z* occurs horizontally and vertically.

[50] *b* in KJA 289, ṭ in KJB 148, for instance, *f* in KJB 179, KJC 585, 733, as mentioned above, *k* in KJC 458.

one text[51]. The most frequent variations in direction occur with the letter *d* in which the loop faces both backwards and forwards[52].

D. Letters written in the gaps of the preceding letter and the inversion of letters to form a symmetry:

1. The gaps between the arms of the letters *b*, *ġ* and *k* are sometimes filled with the following letter. The most frequent example of this is the *n* following *b* in the word *bn* but there are other instances[53].

2. The letters *ṣ, ġ, k, l, h* and *y* occur either way up in the texts. There are frequent examples of the hooks of the *l*'s in one text occurring both at the top and bottom (see KJA 24, 37, 40, 44 etc.), which is probably done in many cases to produce a symmetry, a feature which is particularly striking when the two letters occur next to each other (see KJA 37, 114, 344, 348 etc.). A similar symmetry is formed with the *ṣ*'s of a text by inscribing one of the letters with the circle on top and the other with the circle on the bottom (see AMJ 110, 111 and Jobling 1986(a): 262-263 and Jamme 1988:238)) and is probably the reason behind the *ṣ* and *h* of the name *ṣhbt* being consistently inscribed with the forks of the two letters placed at the opposite ends. An instance with the *h*'s of a text occurs in KJA 348[54] and also in KJC 663[55].

E. The joining up and infilling of letters:

1. Macdonald (1989) recognized that the letters of several Safaitic inscriptions had been joined up using various methods[56]. This he convincingly argues was a form of 'doodling' on the basically 'monumental' forms of the letters rather than an attempt at a distinctive cursive script. The letters of several texts among the present corpus have been 'played around with' by joining in a similar fashion[57]. As in the examples in Safaitic discussed by Macdonald, not all the letters in a particular text are always

---

[51] The *l*'s in KJA 31, KJC 140, 619 (where because of the shortness of the text a symmetry is formed).
[52] See under *d*.
[53] The *b* accommodates the ʿ in the name *mbʿl* (KJC 74, 79), the loop of the *d* in the name *ʾʿbdt* (KJC 241,503) and *r* in the name *brr* (KJC 350); the *n* is written inside the arms of the *ġ* of *ʾġnt* (KJA 83) and of *ġnṯ* in (KJC 745), for instance; *k* accommodates the *r* in *krt* (KJA 111, KJB 132) and both the *n*'s in *knn* (KJB 7, 65 KJC 175, 553). The *n*'s in some of these texts are also placed diagonally (KJB 7, KJC 175, 687) and see KJC 553 where there are three dots. The *b* of the name *ḏʾb* in KJC 650 is inscribed between the space separating the two forks of the ʾ which might also be an instance of using the space created by the letters.
[54] And the two adjacent *l*'s.
[55] Only some of the authors invert the letters in this way. The name *mhṣ*, for instance, where the relevant letters are next to each other sometimes occurs with letters inverted KJA 19,21, for example, but in other texts the forks are the same way up KJA 46, KJC 29.
[56] He distinguishes five ways of joining (64): letter extension, letter conjunction, letter distortion, ligaturing (by dots and bars) and drawing a straight line through the letters.
[57] Five of the examples from Site C are on the same rock CCXIV, KJC 310-311, 315-317 and those on rocks CXVIII KJC 321 and rock CCXXVII KJC 329 are close by.

joined to one another and the ligatures are usually shallower than the letters[58] although an exception occurs in KJB 61 where they appear to be the same depth. Four of the methods of joining described by Macdonald have been used. Clear examples of letter extension and conjunction occur in KJB 61, KJC 67, of ligaturing in KJC 13, 310, 317 and 321[59] and by inscribing a straight line through the text in KJC 311 and 544[60]. The joining up of the apertures of letters[61] also occurs, either in conjunction with the joining up of the letters to one another (KJC 13, for example[62]), or by itself (KJC 73 and 75).

2. In several cases the gaps of a letter, i.e. the space between the arms, forks, curves or circles, are infilled[63]. In some instances the apparent infilling is the result of inaccurate or rough hammering, which has caused the rock to flake away particularly when the gap or circle is rather small[64]. Intentional infilling is easier to identify when the technique of inscribing is even and a selection of the letters have been hammered in[65]. That the feature of infilling was an addition made to the letters by the author rather than being destructive hammering by him or someone else is suggested by the careful way in which it is done and by the fact that some authors seem to do it repeatedly, although not necessarily to the same letters[66]. Infilling is frequently associated with joining-up of the letters[67] which suggests it was similarly a form of 'playing around' with the letters or 'embellishment' albeit destructive from the point of view of anyone trying to read the text.

In KJE 111 the inner circle of the *ḏ* has been infilled, since the first two letters of the

---

[58] Although in most cases I have not been able to identify the *n* separately from the ligatures that join it to the arms of the *b* thus forming a monogram of the word *bn*. See, for instance, KJA 212, KJC 315 and 321.

[59] A possible example of letter distortion by stance might occur in KJC 13 where the *m* has a vertical stance in a horizontal text. This might have been done to maintain a more or less even height of the letters and thus the 'flowing' appearance created by the joining. If that was the case then it would mean the author intended from the outset to join up this part of the text.

[60] The line through KJC 578 might also be an instance of this but it very roughly done and might equally be destructive.

[61] See Macdonald 1989: 65 with reference to *ꜥ* and *h* in WH 3923 and Clark 1983: 72 under *t* and see § B above.

[62] In KJC 229 and 657 the arms of the *k* have been joined and in KJC 229, 230 the arms of the indentation of the *m*'s.

[63] cf. the *ḏ* in WH 3923, Macdonald 1989: 65-66.

[64] cf. the remarks in § A under *t* above. It is sometimes difficult to identify intentional or accidental infilling, the infilling in KJA 163 (of the *g*), KJB 22 (of the *y*) and KJC 151 ? (of the *ṯ*) is probably a result of rough hammering.

[65] See KJA 211, 212, 215 (which are all on the same rock face), KJB 115 and KJC 303, 310, 311, 314, 315 (which are on the same rock) and KJC 555, for instance.

[66] KJA 212 and KJC 315 are possibly by the same author although the infilling makes the reading of both texts difficult. The other examples are texts which only give one name and so one cannot be certain they are the same person (see Ch.5.C.1) although the consistent infilling makes it more probable that they are, see the texts by *rfd* (KJC 235, KJC 156,408) and *gs²m* (KJC 544, 546, 548) and see § F below.

[67] KJA 129, 21, KJB 111, 310, 311, 315, 321 for instance.

text are joined, it appears that this apparently fairly fundamental change to the form of the letter is simply the result of such 'embellishment'[68].

3. In KJC 408, where some of the letters are infilled, the circle of one of the *w* 's has been filled in and there is a cross in the middle rather than a single line. The fact that the other letters have been 'played around with' suggests that the addition of the line forming the cross is the result of a desire to embellish the letter[69].

F. Similarities between the letters:

For the reasons discussed below (§ H.1) it is, on the whole, difficult to identify consistent similarities or distinctive features in the letter forms of texts inscribed by the same authors. There are, however, a few exceptions to this and in instances of texts with the same name, where no genealogy is given, whilst similarities in script do not make it certain that the texts were written by the same individual, they do make it more probable[70].

G. The direction of the texts:

The texts are written with complete disregard to divisions between words and are inscribed in virtually any direction, vertically up or down, horizontally from right to left or from left to right, diagonally, in zig-zag lines[71], or in circles and loops. There is a tendency for them all to be inscribed close together, intricately interwoven between each other even though there is often sufficient room on the rock for them to be well-

---

[68] The other *ḏ*'s which have dots in the middle are not associated with either joining or other infilled letters KJA 138, 321,507. On the other hand, isolated examples of other infilled letters are attested see the *m*, in KJC 303 and the *g*'s in KJC 544 and 546, for example.

[69] The embellishment is not very imaginative. The *w* of AMJ 4 also has a cross in the middle where there is no infilling and I am not suggesting on the present evidence that this form of the letter, is necessarily always simply the result of an individual's attempt to decorate the letters of his text. I do, however, think that it is the most likely reason for the form of the letter in KJC 408 and it is possible that a similar motive lies behind other forms of the letter and perhaps also the *ʿ* with a dot in the middle and the additional crossbars in some forms of *t* but there is no evidence to substantiate these last two suggestions.

[70] We cannot even be certain that the names are the same, see Ch.5.8.2 and C.1. For instances of distinctive similarities, see the large *ʾ*'s in some of the texts by *bnʾb*, KJC 467, 476, 491; the *b*'s with proportionally long arms in some of the texts by *brr*, KJA 220, KJB 83, KJC147, 350; the large looped *d*'s in texts by *drg* KJB 79, KJC 589; the consistent use of zig-zag *f*'s in texts by *fnd bnʾḫʾb* in KJC 4, 283 and by *fnd* in KJC 181; the *m*'s in KJC 241 and 503 which are both by *ʾmn*. The similarity of other features also suggest that it is likely that some of the texts with only one name are by the same person, see, for instance, the comparatively large size of many of the texts by *ġnt*, KJA 66, 140, 229, 238, 418, 745; the placing of the loop of the *d* in the arms of the preceding *b* (see § D.1) in texts by *ʾʿbdt*, KJC 241 and 503; the frequent use of infilling (see E.2) in texts by *rfd*, KJA 235, KJC 156, 408 and in texts by *gs²m* KJC 544, 546, 548.

[71] Effectively *boustrephedon*, see KJA 36, for example.

spaced which would have made reading them easier. Some texts suffer elaborate contortions of direction[72]. An inscriber often starts his text immediately after the end of another inscription[73] and this can present problems[74] as can instances when the ends of two texts run into each other[75].

Usually the words of a text follow directly on from each other[76] but sometimes the last part is written to the right or left of the first[77]. Frequent examples occur where the *bn* and patronym is written in a new line either to the right or left[78] but it also occurs in other contexts[79]. This practice does not create problems if the text is by itself or well-spaced from others on the rock face but if the other texts are close together then it is not always clear with which inscription the second part should be read unless there is a clear difference in technique of inscribing or, in the case of genealogy, it occurs elsewhere[80]. There might also be instances where words are intentionally inscribed in an ambiguous position although this cannot be corroborated[81].

H. The Differences in the letter forms:

The above division of the letters into forms (§ A) is not intended to do anything more than identify various forms and is necessarily rather loose. It does not, for instance, attempt to classify the forms of *ʾ, ṯ, ḫ, z, ṣ, ḍ, ẓ, ʿ, n, h, w* and *y* which all, to a greater or lesser extent show variations. The reason for this is that, at the level of the study undertaken here, it is difficult to identify the significance of the variations, something which is also true, to a certain extent, about the differences in forms of the other letters which I have isolated. The problem arises from the informal nature of the script whereby the majority of the differences are the result of incidental factors such as the skill of an inscriber, his temporary preference and the care taken by

---

[72] See KJC 107 and the end of KJC 174, for example. Such contortions and changes in direction are often clearly because the inscriber has misjudged the space needed to complete his text, see KJB 18, for example.
[73] See KJA 84, KJC 543, for example.
[74] See the commentary to KJB 58a.
[75] See KJA 88 and KJC 253, for example.
[76] In a text that bends at right angles the bend is not necessarily made at the end of one word and beginning of the next but sometimes occurs in the middle of the word, see, for example, KJA 292 and KJC 39 where the texts bend after the *ḫ* of *ḫṭṭ*.
[77] This also occurs with the letters in the middle or end of a word see, for instance, KJB 172, KJC 489 but this is usually done to avoid a ridge or crack in the rock. Large gaps between the letters of words, see KJA 187, KJC 99, KJC 198, 333,438, 489, 492, 543, for example, often occur for the same reason. The irregularities of the rock surfaces have not been drawn on to the facsimiles.
[78] See KJA 1, 44, 76, 111, 187 etc. and see some of the texts by *ʿrs¹ bn ḥrs¹* KJC 442a, 522 and 615 in which the author has inscribed his genealogy in different directions to that of the first part of the texts.
[79] See KJB 55, 70, 74, KJC 362, 648, 754.
[80] There are no particularly ambiguous examples among the *Wādī Judayyid* texts but see AMJ 86, 87, for example.
[81] For possible examples, see KJC 712-713 and 716-716a.

him; different techniques of inscribing[82]; the direction of the text (and changes in direction)[83]; infilling of the letters[84] and the nature of the rock surface[85]. Unless these factors were taken into account in each individual case a classification of the forms of the most of the texts from these sites would be complicated and would, on the whole, reflect the incidental variations rather than more fundamental ones[86].

2. In some forms of the letters the changes are clearly basic ones. Unfortunately, in attempting to group their occurrence one is severely hampered by the brevity of the majority of the texts which means that there are usually insufficient examples of other letter forms on which to base a classification. Furthermore, none of the Hismaic texts are dated and so, even if one was able to produce such a classification, it is unlikely that it would tell us anything about the temporal development of the various forms. Nevertheless, for most of these letters, there are instances in which these different basic forms occur in the same texts, in different texts which are possibly by the same author[87] or in texts by individuals who are possibly close relations. What can be established, therefore, is that, to a certain degree, these different forms were perhaps used contemporaneously as alternatives[88].

3. One can identify distinctions in a few texts which might indicate two possible separate groups. The first is suggested by KJB 179 and KJC 202. Both of these texts have *d* 's of form (4) with the spines bent in the direction of the loop and in both of

---

[82] Whether rough direct hammering has been used or accurate indirect hammering or chiselling.

[83] *ʾ* with a bent stroke might be a result of this, see KJA 195, KJC 224 where the letter bends in the direction of the text; the angular form of the *b* in KJA 270 might be because the text bends, for instance.

[84] See § E.2. above.

[85] Whether it is smooth or bumpy, cracked and so on.

[86] In addition, in attempting such a classification, one would have to produce a comparative study the forms of all the letters in each text.

[87] See Ch.5.B.2 and C.1.

[88] See, for instance, form (1) and form (3) of *b* in KJC 631a; form (1) and form (2) of *ṯ* in texts by *lhṯ bn ʾs¹lm* KJB 30 and KJC 750; form (1) of *ḥ* in KJB 7 by *knn bn ʿlṭ bn ʾmn fṭḥt* and form (2) in KJB 95 by *ʿlṭ bn ʾmn bn fṭḥt* who is possibly his father; forms (1) and (2) of *ḏ* in KJA 36; forms (1) and (2) of *ġ* in KJA 270; three different forms of *f* in KJA 23; *ḏʾb bn s¹mʿn bn qn* in KJA 44, 49, KJB 156, 174 consistently uses form (1) of *q* whereas *s²brnt bn s¹mʿn* in KJB 107, who is possibly his brother, uses form (2); *hnʾ bn zdqm* in KJA 27, KJB 105 and 177 uses form (2) of *q* whereas *hnʾ bn zdqm* use form (1) in KJA 99, 300, 173; *knn bn ʿlṭ* uses different forms of *k* in KJA 314 (form (1)), in KJB 7 (form (3)) and KJB 687 (form (2)); *mḥllt* uses form (1) and (2) of *l* in KJA 344; *ʾnʿm bn mlk* uses both form (1) and (4) of *m* in KJA 309.

There are, however, no instances where forms (1) and (3) of *d* occur in clearly contemporaneously texts, although KJA 168 and KJC 631a, both by *ʿbdʾyb*, might be by the same man. In KJA 168 the *d*'s are of form (1) and in KJC 631a the *d* is of form (3). For comments on form (4) of *d*, see § 3 below. There are no clear examples in which form (4) of *k* and other forms occur together or in clearly contemporaneous texts. Similarly, there are no instances of straight *s²*'s and squiggly *s²*'s occurring together. However, the forms of the other letters in KJA 105 and KJB 1 in which squiggly *s²*'s occur are well-attested elsewhere. For KJC 46, see below.

them the *s¹* 's have proportionately long tails as do the *ḥ* 's in KJC 202. The possibility of a consistent relationship between the forms of these letters is somewhat tenuous but it is worth bearing in mind that *d* 's with spines bent forwards and long tailed *s¹* 's and *ḥ* 's might be associated[89].

The second group is suggested by KJC 46, 84 and 649 in which some of the letters are written with vertical stances in horizontal texts and, in the last part of KJC 84, the *ḥ* is written with a horizontal stance in a vertical text. Unfortunately, the texts are either too short or do not contain sufficient examples of the same letters to draw much of a comparison but there are one or two points that can be made. The *ḥ* 's in both KJC 46 and 84 both have comparatively long tails; the *m* 's in all three texts are open[90] and the first *m* in KJC 46 and that in KJC 649 have rather shallow curves and are tilted slightly forward; the *h* 's in both KJC 46 and 84 have one fork shorter than the other. These similarities suggest that in some instances, in texts where several of the letters have different stances there might also be distinctive forms of some of them[91].

I. Hismaic and texts with 'Mixed' features:

Harding 1972:5 and Macdonald 1980: 188 drew attention to the occurrence of texts that share Hismaic and Safaitic features and there are certain points that should be made about the script of texts that have this characteristic:

(1) Among the texts published by Winnett 1937: 42 as Hismaic from the *Madāʾin Ṣāliḥ* and the *Jabal Mismā/Ḥāʾil* areas and by him in 1970 as Tabuki Thamudic /Hismaic from the *Jawf/Wadi Sirḥān* area there are texts which I have described as 'Mixed' in Appendix 2[92]. The definition of this group is based on, 1) the occurrence of *l* 's which are straight lines (typically Safaitic) and *n* 's which are dots (typically Hismaic), 2) the form of the *s²* which is either a wavy line with three indentations[93], a zig-zag[94] or a slightly curved line with an indentation[95], 3) the occurrence in some instances of the use of a simplified version of Hismaic type *ḏ*[96].

---

[89] Fairly similar *d*'s occur in KJC 36 but neither of the other relevant letters is attested there. None of the other letters in KJB 179 and KJC 202 show consistent distinctive features.

[90] Although in TIJ 76 where similar changes in the stances occur they are closed.

[91] In fact only one letter, the *s¹* of KJC 649, has a vertical stance but the shape of the *m* suggests it should be grouped with KJC 46. It should be pointed out that other letters have different forms, the *ḏ* in KJC 46 has a curled tail whilst that in KJC 84 with a straight one and a rectangular form of *s¹* occurs in KJC 46 but a rounded one in KJC 649. A *h* with one fork shorter occurs in KJC 718.

[92] The only text in Winnett and Reed 1970 which I have classified as Hismaic is WTI 11, the rest are either Safaitic or Mixed. The term 'mixed texts' was used by Macdonald 1980:188 in his convincing reply to Clarke's argument that 'Tabuki Thamudic' (i.e. Hismaic, see Ch.1.B) should be subsumed under Safaitic.

[93] See WTI 18, 33, 39a, 48a iii and 82, for instance.

[94] See HU 2,1, 789,2 = WHI 203c, JS 27, 596, WTI 85, 92.

[95] See HU 683, WTI 40.

[96] See, for instance, Do XXV 47,4, HU 262, WTI 13, 14. For Hismaic type *ḏ*'s, see WTI 46, 48a I, iii.

The other diagnostic letters within this group of texts tend to be either of the Safaitic type[97] or the Hismaic type[98] and in one instance possibly of both types[99]. Since the corpus of these texts is small the above description is inevitably incomplete. Furthermore, the different forms of the *s²*, the varying shapes of the *ḏ* and the occurrence in some texts of a distinctive form of *m*, in which the indentation is incomplete[100], and a distinctive form of *r*, a line with a hook, in others[101] suggest that there are several categories of mixed inscriptions, only loosely defined here, found in these areas.

(2) From the central Jordanian desert and the western plateau there are texts which I have classed as Hismaic but which have certain mixed features although all the diagnostic letters are of the Hismaic type[102].

(3) There are a handful of texts from predominantly Hismaic areas which contain Safaitic forms of certain letters[103] and, conversely, there are the occasional texts in Safaitic areas which use Hismaic forms of other letters[104].

J. Hismaic, Thamudic B, C, D and Safaitic:

---

[97] For example, *g*, see WTI 40, 81, 82, 94, 96; *t* is sometimes a swastika type, see JS 27, WTI 92 (only occasionally attested in Safaitic); *ṯ* see WTI 95; *ṭ*, HU 2,1, WTI 19, 41, 42, 46; *ẓ*, WTI 40; *ġ* HU 789,2 = WHI .03c, WTI 19, 42, 95, 98.

[98] See, for example, *ḍ*, WTI 19, 41, 42 ?, 48 a I, 48 a iii, 82, 94, 102.

[99] *z*, which is mainly attested as the Safaitic type, see WTI 47, 55, 95. A Hismaic type appears to occur in WTI 33 although if my interpretation of the previous letter as *r* is correct (see below) the reading produces a name which is difficult to explain. *k* in HU 814, WTI 31, 47 occurs in a form which is attested in both Hismaic and Safaitic. For examples of the letter, see Winnett and Harding 1978: 10, under *k* in WH 32, 607.

[100] For example, WTI 17, 20, 55.

[101] See WTI 33 ?, 41, 55, 78, 79 and several of the texts published by Winnett: 1973(a) from the *Ḥāʾil* area, see, for instance, WHI 127 *l nfr bn ʿmr w ts²wq l blt*; WHI 150 *l ʿmrt s²wq ʾl bs¹rt*; WHI 151 *l nmrt s²wq ʾl s¹rq*.

[102] RTI A-C, CSP 2 and CTSS 2 and KU 1-2 all have straight *l*'s. KU 1 has a simplified Hismaic *ḏ* and as well as a more typical type. NST 1 and some of the texts in King 1989, KWM 3,5, for example, have a combination of straight and hooked *l*'s. In KWM 2, 5, 7 the *s²*'s are slightly squiggly, different from a typical Hismaic *s²*, typical Safaitic or any of the three letters described above under (1). Since the corpus of these texts is small and we therefore know very little about the script or how extensive these mixed features are, I have labelled them Hismaic although perhaps we shall find that, more correctly, they should be classified separately. If they are to be considered as a class of mixed texts then it would be a different one from those mentioned in either (1) or (3).

[103] See, among the *Wādī Judayyid* texts, the *s²*'s in KJA 105, KJB 1 and the *k*'s in KJA 258 and KJC 312.

[104] See, for example, the texts identified by Knauf 1983 and listed by him as South Safaitic (593) which use a Hismaic type *g*, C 1782, C 5355, WH 44, 800, 809, 3105, 3531 + 2, 3927 and, possibly, 2322, although an explanation of the name *gḥmʾl* is difficult on etymological grounds. HCH 194 which uses a Hismaic *ḍ* and C 5276 which has a Hismaic type *r*, *ḍ* and possibly *g* (*l ʾm ʿḍ ḏ ʾl frg*, the tribal name, on etymological grounds, could read either *frg* or *frṯ*).

The above discussion of 'mixed features' emphasizes the need for more work to be done on the classification of the scripts of Early North Arabian. Winnett (Winnett and Reed 1970: 69-70) pointed this out with reference to his 1937 classification of the Thamudic texts which is minimal and needs refining[105]. Furthermore, there are letters in the categories that he does identify, the values of which are still uncertain or not very well substantiated[106].

---

[105] A good example of this are the texts that Winnett classifies as Thamudic C (1937: 34-38). He identifies the *r* in these texts as a small deep curve (see the 1937 script table) whereas in most of these texts it is clearly a straight line.

For example, *bn grs²ʿ*, JS 40, (cf. HIn: 144 under *ṯrs²ʿ* and see the Index of names); *ḥrm* JS 86, 93, 97 (HIn: 185); *qrfz*, JS 100, 111-113 etc., (see the Index of names); *wrmt*, JS 80, (HIn: 185). Instances where the curved letter has been read as *r* are not conclusive and it is equally possible in most cases that it should be read as *b*: *zrʿt*, JS 43, *zrʿ-*, JS 48 (read instead *zbʿt*, *zbʿ-*, cf. KJC 711 in the Index of names); *ṣnrt*, JS 64 (read instead *ṣrbt* (cf., for eg., Ar. *ṣarabah* 'tree that has restored its growth'); *ḫrʾt*, JS 84, 98 (possibly from Ar. *ḫyb* ?, or identification of the first letter mistaken, read, perhaps, *ḏ* ? *ḏʾbt*, cf. JS 152 *ʿyḏ* (rather than *ʿyḫ*) and JS 132 *kḏbt* (rather than *kḫrt*)). In JS 75 I would read the first letter as *ṣ* and emend the second to *ʾ*, reading the name *(ʾ)ṣbt* (cf. *ʾṣb*, HIn: 50). That these texts with straight *r*'s are different from Thamudic D (where the letter is also a straight line) is shown by the squiggly form of the *s²* with a fork at one end in, for example, JS 102, 103, and 135.

Winnett 1937: 37 suggests that in five Thamudic C texts (JS 64, 150, 749, HU 121, 174) the *n* is a straight line, as in Thamudic B, rather that a wavy/zig-zag line as in most of these texts, see JS 93, 97, 98 etc. In JS 749, the *n* is in fact wavy, in JS 150 the texts reads *wʾn qrfz* (for the name see above), the straight line is a *r* and the *n* a wavy line, in JS 64 an alternative reading to *ṣnrt*, *ṣrbt* has been suggested above. In the other examples he gives, HU 121 *wʾn dyft* and HU 174,2 *wʾn mrʾs²m*, the reading of the *n* as a straight line is conclusive and there are further instances, see HU 84, 86, 90, for example. Furthermore the *r*'s are all clearly curved in HU 86, 90 and 174.

On the basis of the *r* and *n* alone there are, therefore, two types within Winnett's Thamudic C. The first, Thamudic C¹, has a straight line as *r* and a wavy/zig-zag line as *n* and the second, Thamudic C² has a straight line as *n* and a small deeply curved *r*. The Thamudic C¹ texts quoted above come from *Ḫas²m Ṣanaʿ*, north of *Madāʾin Ṣāliḥ* and the Thamudic C² texts come from *ʾAṣabʿ* and *Jabal Jildiyah*, east of *Ḥāʾil*.

The above distinction between Thamudic C¹ and Thamudic C² is only intended to give on specific example of some of the problems with Winnett's 1937 classification. The definition of the two groups is obviously incomplete and I have not maintained the distinction outside this section, in, for example, quoting names

[106] For example:

ḏ occurs as  in Thamudic C and D but there are very few examples of the letter and I think a question mark still needs to be maintained. For instances in Thamudic C, see JS 4 = WTI 75 and in Thamudic D, JS 207, Naveh N 1.2, WTI 57.

ṣ clearly occurs as a  in Thamudic C JS 7 + 6 = WTI 77, JS 64, 75, 750, 751, TIJ 149, 150 (for the last two texts see Appendix 2). The identification of the letter in Thamudic D is still uncertain.

The most surprising result of recent work on the script of Hismaic is the recognition that the grapheme  represents /*g*/,  represents /*ṯ*/ and represents /*ḍ*/. The first two, or related forms of them, are well-attested in Thamudic B and Safaitic to represent /*ṯ*/ and /*ḍ*/ respectively[107]. The third, , is found in 'mixed texts' and very occasionally in Safaitic to represent /*ḍ*/ (see § I above). We cannot establish for certain which equivalents hold for these graphemes in Thamudic C and D, although it is significant that for /*g*/ in Winnett's (1937) script table there are question marks by the letter for both these groups and that none of the variety of signs for the letter in the script table of Winnett and Reed 1970 are attested in contexts that conclusively identify them as representing /*g*/[108].

ṭ occurs in Thamudic D as , see JS 205, 206 and WTI 61. The identification of the letter in Thamudic C is still uncertain.

ẓ is still uncertain in Thamudic B, C and D.

ġ is  in Thamudic D (see Van den Branden 1956(a) I: Pl.I, Ryckmans 1960: 202, Jamme 1970(b): 129 JaT 8). For conclusive examples, see HIC 2 (in the name *ġnm*) and Ph.363c (in the name *ġḍbn*). In Thamudic C the letter is still uncertain, although in WTI 36 which I would read as Thamudic C[1], the last name *ny* might well read *ġny* rather than *kny* as in the edition. For the letters *ṯ*, *g* and *ḍ*, see below.

[107] In Safaitic and Thamudic B, therefore, the signs for /*ṯ*/ and /*ḍ*/ are very close to those in South Arabian. In Thamudic B the sign for /*ḍ*/ varies between a grid (HU 780,3), a square with four spokes (JS 462) and a circle with five spokes (JS 347).

[108] See WTI 50, 59, 63. The instances we have of the graphemes , and in Thamudic C[1] and Thamudic D are very few but some of the more certain examples show, not only how uncertain the situation is, but also gives possible evidence of a degree of variation for the evaluation of the signs:

Thamudic C[1]:

 as /*g*/ JS 40 *rs*[2]*ʿ*, *grs*[2]*ʿ* (rather than *ṯrs*[1]*ʿ*, see the Index of names); JS 54, 108 *rf*, *grf* (rather than *ṯrf*); JS 172 *ʾz*, *gʾz* (rather than *ṯʾz*); JS 85 *bl*, *gbl* (rather than *ṯbl*). Ambiguous examples: JS 55 *ḫṭṭ*/*ḫgg*, JS 61, 101, 110 *ṯryt*/*gryt*, JS 128 *ltmt*/*lgmt*; JS 89, 119 also has the letter but with another, the value of which is uncertain *f*  (cf. JS 126  *m*).

 as /*g*/ TIJ 479 *s*[2]*gnt* (rather than *s*[2]*ḍnt*) (Winnett [1982]: 42). Ambiguous: SSA 32 *gnt*/*ḍnt*; Uncertain JS 96 *w zt l ql**f*.

 as /*ṯ*/ TIJ 305a *ml*, *ṯml* (rather than *ḍml*).

 as /*ḍ*/ JS 57 *b ʿt*, *ḍb ʿt* (rather than *ṯb ʿt*).

Thamudic D:

 as /*g*/ Naveh N 1 *b*, *ʿgb* (rather than *ʿṯb*).

Van den Branden (1950(a), 1957(b)) saw the relationship between the Early North Arabian scripts as a continuous development to a progressively more cursive form with local variations. Professor J. Ryckmans (1956, 1960) persuasively argued against this view, advocating that the scripts although related, represented independent local variations and developments.

Whilst at the moment we are unable to produce a satisfactory comparative study of the scripts and are still far from understanding the relationship between them, there are certain points that are clear:

(1) Some letters have similar forms in all types of Thamudic, Safaitic and the mixed texts[109].

(2) In some cases the same forms occur to represent different phonemes[110].

(3) Some of the letters are different but it would be possible to trace a relationship between the forms[111].

(4) Two groups which we know are, to a certain extent, contemporary[112] (Thamudic D and Hismaic), use different graphemes, between which it is very difficult to see a relationship, to represent etymological /s^2/[113].

 as /*g*/, possible, HU 509,1 s^1r *ntn*, s^1rg (son of) *ntn* (rather than $s^1rḍ$) HU 509, 2 *z(n)* *rmn*, 'This is *grmn*' (or *ḍrmn*) (cf. Winnett [1982]: 34-35).

 as /*ṯ*/ JS 207 (= JaT first half), JS 210 = JaT 28d  *ʿlbt, ṯ ʿlbt* (Winnett [1982]: 38-39) (rather than *ḍ ʿlbt*).

 as /*ḍ*/ Ph 363c *ġ**bn*, *ġḍbn*

 ambiguous JS 209 = JaT 28f *m*, *ḍm* or *ṯm*.

In Thamudic C^2 in HU 85,1 there is evidence for as /*ḍ*/ in the name *ḍḥ(l)t* and also, in the same text, that *rf* is *grf* where the relative size of the letter suggests it should be read as /*g*/ rather than the other possible alternative / ʿ/. This means that there is evidence that Thamudic C^2 has at least a few features which it shares with Thamudic B (and, incidentally, Safaitic), namely, a straight line as a *n* and the same signs for etymological /*ḍ*/ and /*g*/. That the category is different from Thamudic B is suggested by the form of the ʾ, see, for instance, the letter in HU 86, 98, 174, 2 with that in the Thamudic B texts, for example, JS 300, 305, 332.

[109] See, for example, for forms of *t*, *h*, *w* and *y*.

[110] For example, a straight line: *n* in Safaitic and Thamudic B, *r* in Thamudic D and C^1 and a s^2 in Hismaic. A dot: *n* in Hismaic, sometimes ʿ in Safaitic. A squiggly line: *n* in Thamudic D and s^2 in Safaitic. A line with a hook: *l* in Thamudic B, C^1 and Hismaic and *r* in some mixed texts (see § I (1) above).

[111] For example *ġ* and *k*.

[112] See Ch.8.B.n.11.

[113] Thamudic D  JS 1, 203, 499, for example, and Hismaic , see the script table.

(5) There are two groups that use the graphemes  and  for /<u>t</u>/ and /*ḏ*/ respectively (Safaitic and Thamudic B) and one (Hismaic)[114] that uses them for /*g*/ and /<u>t</u>/.

The last two points endorse Ryckmans' view as the differences there clearly cannot have occurred through a single chronological development but must have resulted from the adoption of the forms by these particular groups at some point.

[114] And probably others.

Ch.3

3.Phonolody, Orthography and Grammar:

Sketches of Thamudic grammar in general, disregarding Winnett's classification, are to be found in Littmann 1940: 31-34 and in Van den Brander 1950(a): 33-43, although the latter's reliance on poor copies and his lack of consistency in interpretation make most of his comments doubtful. More useful are comparisons with studies of Safaitic phonology, orthography and grammar which are based on a larger number of texts and, on the whole, more reliable copies[1].

A. Phonology:

Hismaic contains the full complement of North Arabian phonemes. The inscribed alphabet (Knauf 1985) lists the phonemes in the North Semitic order, with *l*, *r* and ʾ in anomalous positions, and the additional North Arabian phonemes at the end:

l b g d h w z ḥ ṭ y k m n ṣ r ʿ f q s¹ t ġ ḍ ḏ ṯ ʾ ẓ s² ḫ [2]

1. *t* for /*ṯ*/ and *ṯ* for /*t*/:

Littmann (1945-49: 174-175), Knauf (1983: 588) and Voigt (1984:312) maintain that there are instances where *t* occurs for /*ṯ*/. Macdonald (1986: 135-136) has shown that the examples used do not provide conclusive evidence as they can all be explained otherwise[3] and there are no examples amongst the *Wādī Judayyid* inscriptions that suggest the two phonemes had fallen together.

The examples given by Littmann (1945-49: 173-174) of the use of the phoneme *ṯ* for /*t*/ are largely based on the mistaken identification of the grapheme [4].

---

[1] See Littmann 2943: xii-xxiv; Oxtoby 1968: 8-13; Winnett and Harding 1978: 12-15; Clark 1983: 112-124; Müller 1980: 67-74.

[2] See Macdonald 1986 for a detailed discussion of the alphabet. For inscribed Safaitic alphabets, see Macdonald *ibid* and King 1990.

[3] Macdonald points out that Jamme's reading of TIJ 280 (Jamme 1974(b): 125) provides an alternative to Littmann's which involved suggesting *tʾr* for *ṯʾr*. The name *tmd* in TIJ 105 etc. is most probably a feminine imperfect from the root *mdy* and *wtm* in TIJ 29, which is an uncertain reading, (Macdonald 1986: 135) might be derived from the root *ytm*, see HIn: 634 and § 4 below. The name *krtm* discussed by Littmann (1945-1949: 174) can be explained from *kurtūm* 'large rock'.

[4] The examples he gives include the names *ḥml* - (*ḥmlṯ*) - *ḥmlg*,

ʿbd - (*ʿbdṯ*) - *ʿbdg*, *fl* - (*flṯ*) - *flg*, etc. Drewes 1985; 166-7 who discusses the occurrences after nasals of the interdental for *t* in Lihyanite and suggests the same explanation for some of the names in Hismaic (*bn* *mhr*,

2. *d* for /*ḏ*/ and *ḏ* for /*d*/:

There are clear instances of the phoneme *d* being used for /*ḏ*/ in the variant spellings of the divine name *Ḏū l-S²arā - ds²r/ds²ry* as against *ḏs²r/ḏs²ry*[5].

Both Littmann (1945-49: 176) and Knauf (1983: 588) quote several texts as evidence for *ḏ* being used for /*d*/[6]. However, among the texts from the *Ḥismā* there are only two cases, TIJ 109 and KJA 318, which provide fairly certain instances of this[7]. In the former, the name *rḏʾl* is attested, the first element of which Littmann explains from the root *radda* 'return'[8] and, in the latter, the name *wʿḏ* is most probably a variation of *wʿd*[9]. In RTI A, which comes from central Jordan, *tmʿbḏt* occurs for the name *tmʿbdt*.

3. *ẓ* for /*ẓ*/ and *ḍ* for /*ẓ*/:

Littmann (1945-49: 172) suggested that in some instances *z* occurs as a dialectical variation for *ẓ* in Hismaic. His proposal derived partly from the reading of the grapheme  as /*z*/ in HU 261 and 262 (Winnett 1937: 45, 47) which raised the possibility that the letter could represent both /*z*/ and /*ẓ*/. The two texts in question, however, are Safaitic (Macdonald 1986: 111, 143) and not Hismaic. The *Wādī Judayyid* texts provide several additional instances of the phoneme (represented by the grapheme) in the names *ḥfẓ*, *ẓʿn*, *ẓʿnt*, *znn*, *mqẓ*, *yẓr* where there are no imperative etymological reasons for suggesting that the grapheme was used ambivalently that these sounds on occasion fell together[10].

With the identification of  as /*ṯ*/ and  as /*ḍ*/ there is no evidence that /*ẓ*/ fell

---

bn  *rf*) was also misled by the wrong evaluation of this grapheme. Knauf (1983: 588), however, maintains that there is an instance in TIJ 156 in the name *ʿbd* although, as Macdonald (1986: 135-136) points out, this must read *ʿbdg*.

[5] On the basis of the then published texts Macdonald (1986: 110-11,142) draws the conclusion that the deity's name is regularly written with *ḏ* in texts from the *Ḥismā*.

[6] See also Voigt 1984: 312.

[7] The examples they quote include TIJ 69 where the reading *yḏʿ* is clear on the copy, however, I have reservations about the accuracy of the reading although there is no photograph from which it can be checked, see Appendix 2. The name read as *yrḏ* in TIJ 255 is most probably *grḏ* and the central part of the copy of TIJ 490 is so doubtful that I would hesitate to read *zḏ* as certain.

[8] The root is not attested elsewhere as an element in a theophoric compound name (the name *ʾlrd* read in HU 690 by HIn: 66 is doubtful as it is uncertain which type of Thamudic the text is). It should also be pointed out that there is no available photograph of this text.

[9] A less substantial explanation for the name would be metathesis of the first two letters, see § B.10. *ʾlwd* might be a variant of *ʾlwḏ*, although there is another possible explanation of the name, see the Index of names.

[10] There are other instances in the names *bẓ*, *bẓry* and *bẓẓ* but the readings of all these are questionable.

under the phoneme *ḍ* as suggested by Littmann (1945-49: 171) and Voigt (1984: 313)[11].

4. Variations in the use of *w*, *y* and *ʾ*:

There is evidence for variant spellings using *w* and *y*. Both *wtr* and *ytr* occur as names, and *wtm*[12] is most probably to be explained from *ytm* and *yly* from *wly*. A variation where the letters are the final radical of the root occurs in the names *ʾḏkw* and *ḏky* and possibly in *ḥrw/ḥry*, *s¹rw/s¹ry* and *ʿrw/ʿry*. *ʾ* replaces *y* in *rʿʾ* (KWM 12) and *y* replaces */ʾ/* in *yl* (CTSS 3) and in *ks¹y* (KJC 139). The imperfect of the root *qrʾ* occurs as *yqry* (MNM b 6).

5. Assimilation and ellision of consonants[13]:

The assimilation of *m*, might occur in *grmnt* (*grm* + *mnt*)[14]. *ʿbdmk* occurs for the name *ʿbdmlk* (cf. Nab. *ʿbdmnkw*, see § 7 below), the relative particle *mn* is written *m* in KJC 46. The names *yḏr*, *yṣr* and *yẓr* might be derived from the roots *nḏr*, *nṣr* and *nẓr* with an assimilation of the unvocalised initial radical *n* in the imperfect form[15]. *bnt* (Ar. *bint* 'daughter') occurs in Do XX 37,11 but the *n* is assimilated in KJC 329, TIJ 98, 99[16].

The *ʾ* is dropped from *ʾb* in some compound proper names[17] and in an internal position from *ʾl* in the names *ʾḏnl*, *ḥnl*, *s¹ʿdl*, *ʿnl*, *ʿtnl* and *whbl*[18] and *ʾyb* in the name *ʿbdʾlyb* which also occurs as *ʿbdʾyb*[19]. Initial *y* of the deity's name *yṯʿ* is assimilated in the compound name *s²ʿṯ*[20].

---

[11] The examples he gives include *m*𐤇*ʿn* which Littmann reads as *mẓʿn* but is really *mṯʿn*, *ʿ*𐤇*mn* Littmann *ʿẓmn*, but really *ʿṯmn*, *ġ*𐤇 Littmann *ġẓ* but really *ġṯ* etc.

[12] The reading of the name is doubtful.

[13] For the assimilation of *n* in Nabataean, see Cantineau 1930: 44-45 and in Safaitic, Winnett and Harding 1978: 13, Littman 1943: xiii and Müller 1980: 69.

[14] There is doubtful occurrence of the name *tmnt* in Lihyanite JS L 256/1 (Jin: 936) which might be a compound of *tm* + *mnt* where the *m*'s are assimilated, cf. the vocalization of the Arabic name *Tammanāt*. There is, however, a perfectly adequate alternative explanation for the name *grmnt*, see the Index of names.

[15] Other explanations of the names are possible, see the Index of names, but this seems the most satisfactory.

[16] The readings or interpretation of all these texts are doubtful, for the examples from TIJ, see Appendix 2.

[17] See Ch.5.A.2.

[18] *ʾḏnl* and *ʿtnl* are doubtful readings. The names *ḍḥkl* and *qyml* might also be instances of this, although I am uncertain about the first on etymological grounds (and would prefer to suggest it is a quadriliteral form) and the reading of the second is doubtful.

[19] The inscriptions with this name might be written by the same man and the lack of *ʾ* in *ʿbdʾlyb* could be a mistake, see § 10.

[20] Suggesting a pronunciation *Šai ʿīṯaʿ* (cf. Taymanite HE 23 *tmṯʿ* and see Müller 1979: 26). The root *yṯʿ* might also occur in the name *ṯʿt* for which it is otherwise

6. The use of *m* for *b*:

KJC 128 reads *l brr mn ʾs¹mnt* where *m* has been written instead of *b* in the word *bn* 'son of'[21]. Since *brr mn ʾs¹mnt* occurs elsewhere at the sites (KJC 257, 665) this explanation seems more satisfactory than suggesting that *mn* is Ar. *min* 'from' and translating the text *brr* of the family of *ʾs¹mnt* (Wright II: 139 rem. a)[22].

7. The interchange of *n* and *l*:

The spelling of *ʿbdmk* < *ʿbdmlk* suggests an interchange of *n* for *l*, similar to that found in Nabataean (Cantineau 1930: 45) where the name of the kings Malichos occurs as both *mlkw* and *mnkw* and the compound as both *ʿbdmlkw* and *ʿbdmnkw* (see Cantineau 1932: 114-115, Milik 1958-1959: 354-355, Milik 1976:154). For the assimilation of the *n*, see §.5 above.

8. Doubling of the liquid letter *l* [23]:

Doubling of *l* occurs in *ḥll* (Ar. ḥalla), kll (Ar. *kull*) and the name *mḥllt* (cf. Ar. subs. *maḥallah* and the names *al-Miḥall* and *Muḥill*). The name *ʾsll* might also be an instance of this[24].

9. *Tāʾ marbūṭah*:
There is no conclusive evidence that *tā marbūṭah-at* had started to move to the Arabic pronunciation *-ah*[25]. There are a few names where this might be the case *ʾmrh*, *ʾmh*, *bʿlh*, *bnṣlh*, *mnh* but they are either doubtful readings or their interpretation is ambiguous.

B. Orthography:

1. Vowelling:

There is no evidence of the use of *matres lectionis* to represent long vowels, short vowels or dipthongs. Clear examples of the lack of orthographic representation of dipthongs occur in *s²q* (Ar. *s²awq*) and *sb* (Ar. *sayb*)[26].

---

difficult to find a satisfactory explanation. For the occasional spelling of the divine name *yt̲ʿ* as *ʾt̲ʿ* in Safaitic, see CSNS 813, for example.

[21] See Cantineau 1930: 44 for an occurrence of a similar change in Nabataen.

[22] cf. JS Min. 59 which reads *ʿbdwd mn grmnhy* and see Winnett and Read 1970: 121. *ʿmmngt* in TIJ 216 might also be an instance of *m* being used for *b*, see Appendix 2.

[23] For this feature in Safaitic, see Littmann 1904(b): 116, 1943: xiii and Oxtoby 1968: 10.

[24] See below § B.9.

[25] For evidence of the transition in Safaitic, see Müller 1980: 60.

[26] *s²wq* occurs in HS 88 (*rb s²wq b w ʿl*). I would prefer, however, to suggest the *w* has a consonantal value (despite the fact I cannot find an equivalent nominal form in Arabic) rather than suggesting it is an isolated case of dipthongal representation.

2. Geminated Radicals:

Many of the names with a biliteral spelling can be assumed to be derived from geminate verbs indicating that the unvocalised doubled consonants are represented only once. Therefore, where they are both graphically represented the name is a diminutive or other vocalized form. The evidence for the *ʾfʿl* form is ambiguous[27].

3. *ʾAlif maddah*:

The verb *ʾḏ* (KJA 23), if my interpretation is correct, provides an instance of the orthography of *ʾā-* where *ʾ* is maintained as against the use of *ʾalif maddah* in Ar. *āḍa*. Other examples cannot be identified with certainty as they are names, although possibly a vocalized double *ʾ*, *ʾaʾ* (Ar. *ā*) might be represented by a single *ʾ* in *ʾdm*.

4. Medial *ʾ*:

In most instances medial *ʾ* probably represents a radical rather than Ar. *āʾ* (< *-*āy-*, *-*āw-*) in Form I active participle (*fāʾil*) of hollow verbs. Some cases, however, are ambiguous, for example, *dʾl*, *dʾm*, *sˡʾb* and *sˡʾr*[28].

5. Final *ʾ*:

In the majority of names ending in final *ʾ* the letter can be explained as a radical. There is one fairly certain exception to this in *tr̲ʾ* and a possible exception in a doubtful reading *gnʾ*, where *ʾ* probably corresponds to Ar. *āʾ* in the normal forms *t̲arāʾ* and *ġanāʾ* from the roots *t̲rw/t̲ry* and *ġny*[29]. Similarly, *ʿmʾt* which is probably to be derived from the root *ʿmy* might correspond to Ar. *ʿamāʾah*. Müller 1980: 72-73 finds evidence for final *ʾ* being the suffixed Aramaic article in Safaitic which would provide a possible interpretation for final *ʾ* in the name *hlʾ*[30] which is otherwise difficult to explain. There is, however, no conclusive evidence from strong roots that this form occurred in Hismaic[31].

6. The radicals *w* and *y*:

w and *y* may represent the following Arabic orthography:
a. Verbs:
Final: *bny,* Ar. *banā* (< **banaya*); *rʿy*, Ar. *raʿa* (< **raʿaya*); *ġny,* Ar. *ġaniya*

---

[27] See § B.9.
[28] The name *gʾnt* is unlikely to be a participle form from the root *jwn* (Ar. *jāna* 'become black') and should be explained in some other way perhaps from *juʾnah*, see the Index of names; cf. Littmann 1943:303 and see Cantineau's (1932: 76) discussion of the name *gʾnyw* in Nabataean.
[29] cf. § 6.b.
[30] The name being derived from *hll* or *hwl*.
[31] *hmrʾ* in KJB 180 might be an example derived from the root *hmr*, although it is equally possible that it should be explained from *mrʾ* with the particle *h*, see Ch.5.B.1.

Medial: *byt*, Ar. *bāta* (< **bayata*); *ṣyd*, Ar. *ṣāda* (< **ṣayada*)[32]

b. Nominal forms:
ḏkw[33], *ʾfsy*, Ar. *ʾafʿal*, **ʾaḏkā*, (< **ʾaḏkaw*), **ʾafṣa* (< **afṣay*)
ḏs²ry/ds²ry[34], Ar. *Ḏū l-Šarā*, (< **Ḏū l-Šaray*)
ṯry, Ar. *ṯarāʾ* (< **ṯarāy); ġny*, Ar. *ġanāʾ* (< **ġanāy); ngy* Ar. *najāʾ* (< **najāy*); *ʿs²w*, Ar. *ʿas²āʾ*[35] (< ** ʿas²āy*).

c. Derived participles[36]:
mḥmy, Ar. *muḥmⁱⁿ*, *maḥiyy*, *mʿzy*, Ar. **muʿzⁱⁿ*, **muʿazzⁱⁿ*
mġny, Ar. *muġnⁱⁿ.*

d.The *y* at the end of the name *ʾḫy* probably indicates a diminutive (Ar. *ʾUḫayy*)[37].

e. A few instances can be identified where the radicals *-y* and *-w* are not represented orthographically and it must be assumed that among biliteral names there are other examples:
ʾl (Ar. *ʾilā*); *dʿ* (Ar. *daʿā*); *ḏs²r/ds²r* (Ar. *Ḏū l-Šarā*); *rh* (Ar. *rhw*); *sr* (Ar. *s¹āra*); *ʿl* (Ar. *ʿalāʾ*); *ġr* (**ġārⁱⁿ*); *ftt* (Ar. *fatāh*); *mnt* (in cmpd. names) (Ar. *Manāt*); *nk* (Ar. *nāka*).

7. Suffix *-w* and *-y*:

There are clear examples of the form *fuʿlā* in the divine names *ʿzy* (Ar. *al-ʿUzzā*) which is attested in compound names and *ktby* (**Kutbā*). The letter also occura as *ktb* and *ktbʾ* in the compound names *tmktb/tmktbʾ* (TIJ 28, SIAM 43). Further instances of a *-y* suffix occur in the personal names *brky, brẓy, ḥmly, rfʾy, s²hry, ʿfry, ʿyly, mṣry, mlky, nʿmy* which might be examples of nominal forms, cf., for example, Ar. *barākāʾ, burākāʾ, baẓrāʾ, ʿafrāʾ, naʿmāʾ*, or *nisbah* forms (Ar. *-iyy*) being used as personal names[38].

There are instances of names formed from strong roots which end in *-w*: *ʿfrw*

---

[32] If the verbs *byt* and *ṣyd* are Form I, see § C.1.
[33] cf. the Safaitic name *ʾʿmw* Ar. *ʾaʿmā* 'blind' in WH 1526. Winnett and Harding 1978: 19 compare the final *w* with the *w* at the end of some Nabataean names, HIn 56 lists the name as uncertain under *ʾʿmr*.
[34] cf. the alternative orthography for the deity's name, § e below and cf. the spelling in Nabataean in which a final radical e below and cf. the spelling in Nabataean in which a final radical is not represented (Cantineau 1932: 81 *dws²rʾ*).
[35] The correspondence in this case is doubtful as the translation of the word is open to question.
[36] The following examples are all names and the correspondence to Ar. Is based on the assumption that they are active participles. *mʿzy* is ambiguous as it could be derived from the root *mʿz*.
[37] And probably in many if the other names with final *y*. The representation of *y* here and in the names from derived participles, (see § c above), suggests that possibly case endings were used.
[38] There are no attested examples of the *nisbah* form being used adjectivally.

and *ʿkrw*[39]. The *w* in these cases most probably corresponds to the Nabataean *w* at the end of proper names[40].

8. Prosthetic *ʾalif*:

Prosthetic *ʾalif* if is not generally represented in the substantives *bn*, *mrʾt*, *mrʾ* (in compound names)[41] and the definite article *l*[42] (see the names *tmlḫwr* and *ʿbdlg*)[43], although it occurs in the names *ʿbdʾl(ʾ)[ḥ]wr*, *ʿbdʾlyb*, *ʾbnsʿd* and *ʾbnmn*[44]. It occurs in the divine name *ʾlt* (TIJ 481)[45] if it is assumed that *lt* represents the same deity[46].

9. *ʾafʿal*:

The elative *ʾafʿal* form is well represented among the names and, for cases derived from strong and hollow verbs, the orthography conforms to that of Arabic.

The situation with respect to final weak and doubled verbs is less certain. There are clear instances from final weak roots in *ʾḏkw* and *ʾfṣy* and there is one instance in *ʾsll*, where the geminated radical is written separately[47]. In instances where a name is composed of an *ʾ* and two root letters, in most cases, they could be derived either from roots with an initial *ʾ*, *w* or *y*[48] but there are some exceptions *ʾṣḥ*, *ʾʿm*, *ʾfṣ* and *ʾns²* [49] which suggest that these, and probably some of the other examples, are *ʾafʿal* forms of either final weak roots or doubled roots where the final radical is not represented orthographically or appears in a contracted form[50].

10.Mistakes:

Apparent variations in orthography might in some cases simply be mistakes made by the inscriber, although they are impossible to identify as such where there is

---

[39] And possibly *gs²mw* in JS 695 + 696 where the copy might be incomplete, see Appendix 2. *ʿfrw* might be a variation of *ʿfry* although as yet there is no evidence for *w/y* interchange except where they represent a radical.

[40] Cantineau 1932: 165-169 and for examples in Safaitic see Winnett and Harding 1978: 19 *ʾs¹dw* and *ʿbdw*. The final *w* in the other examples quoted there could be explained as root letters.

[41] cf. Nabataean *ʾbn*, *ʾmr*, *ʾmrʾ* in compound names (Cantineau 1932: 55, 64).

[42] cf. Nabataean *ʾl* (Cantineau 1932: 61).

[43] It is also possibly lacking in *mtnʿ* which might be Form VIII, although there is another possible explanation of the name, see Ch.5.A.1.b.

[44] The last two names occur in inscriptions of which there are no available photographs and so the readings cannot be checked, see Ch.5.2.b.

[45] See also the mixed text WTI 13.

[46] cf. Nabataean *ʾlt* (Cantineau 1932: 64). *ʾlh* occurs in the mixed text WTI 14.

[47] The doubled *l* here could be due to the liquid, see § A.8. or the name might be the diminutive * *ʾUsaylil*.

[48] *ʾtr* from *wtr*; *ʾtm* from *ʾtm* or *ytm*; *ʾgd* from *wgd*; *ʾgm* from *ʾjm* or *wjm* ?; *ʾdm* from *ʾdm*; *ʾkr* from *ʾkr*; *ʾqm* from *wqm*.

[49] *ʾdr* might be added to these as a derivation from *wdr* is unlikely.

[50] See also Milik's (1958-1959" 357) comments on the Greek transcription of the name *ʾtm* in MNM b 10 Αθαμμος.

insufficient context. There are a few clear examples where letter has been left out[51].

Metathesis occurs in KJA 49 where *ḏbʾ* is written for *ḏʾb*, in KJA 99, where *zqdm* occurs for *zdqm* and, possibly, in KJC 318 where *wʿḏ* might occur for *ʿwḏ*, although in the latter case there is no evidence to corroborate this and there is another explanation for the name, see § A.2[52].

bn bn ʾʿbdt in KJC 169, on the basis of other occurrences of the genealogy (see Index a), must be an instance of dittography.

In other texts there are examples where mistakes have been rectified, either by hammering a letter out[53] or by adding it to one side[54]. Where the mistakes have not been corrected, it might be because they were not noticed or because there was insufficient space to change the letter without damaging the rest of the text.

C. Grammar:

1. Verbs:

The number of verbs attested is so small that little can be said about the inflections and forms. The texts are expressed in the third person singular of which both the masculine and feminine (*-t*) perfect are attested. The perfect is used to express statements and as an optative in prayers. An imperfect occurs in two texts (MNM b 6 and TIJ 494) and the imperative in KJC 46, 115.

Strong verbs: Forms I, II and IV are attested. Form II of the strong verb is graphically indistinguishable from Form I, although a clear example occurs in *slḥ* (KJC 139, 140) on the basis of the corresponding meaning of the form in Arabic and a probable example in *ḥdṯ* (KWM 2, 4, 7 etc.). Form IV with the prefix *ʾ-* occurs in *ʾs¹dḥ* (KJC 139) and possibly a variant form with *h-* in the imperative *ht* (KJC 46) (cf. Ar. *hāti*, *āti*).

The variant forms of the orthography of Form I of hollow verbs are listed in § B.6. The suggestion that *ṣyd* and *byt* are *plene* spellings of Form I is based on the meaning of Form I of the verbs in Arabic, although the possibility that they are Form II cannot be discounted (Littmann 1943: xviii, Oxtoby 1968: 11).

Form two of a doubled verb occurs in *wdd*. *nyk* occurs with *nk* in KJA 6 indicating that the two verbs have a different sense and that the triliteral spelling is not, in this case, a variant of the orthography of Form I. An example of Form V occurs in *ts²wq* (JS 229).

A verbal noun is attested in *ks¹y* (KJC 139), *ḏy* (KJC 46)[55] and in *s¹mʿt* a form used in prayers. Participles occur in KJC 138 (*bġ* and *hrʿ*), KJC 659 (*s²h*), KJA 97, KJC 673 (*ġr*) and possibly in *ḫṭṭ* in *w* N *ḫṭṭ* phrases.

2. Plurals:

---

[51] For instance, *ḫ* has been left out of *ḫṭṭ* in KJB 54; the conjunction *w-* in KJB 74; the *m* of *s¹qm* in KJB 136; the *y* in *ʾs²yʿn* in KJC 641 and *g* in the name *gfft* in KJC 147d.
[52] *mġny bn hn* (KJB 70) might be a mistake for *mġny bn hwn* (KJB 116).
[53] See KJB 129, for instance.
[54] See KJA 236, KJB 7 and possibly KJV 436a.
[55] And probably in AMJ 5.

No sound masculine plurals are attested[56]. The lack of vowelling possibly disguises a broken plural in KJC 140 (*w ʿl*) but there are clear examples in *ḫṭṭ*, Ar. *ḫaṭūṭ*; *ʾs²yʿ*, Ar. *ʾašyāʿ* (KJA 86, 641)[57]; *ʾrḫl*, Ar. *ʾarḫul* (KJC 539). The list of feminine substantives in KJC 539 most probably contains forms of the sound feminine plural. The dual possibly occurs in KJC 108 although without agreement with the two preceding feminine nouns.

3. Adjectives and Adverbs:

Adjectives used attributively occur in CTSS 3 (*rḥṭ ṣdq*), MNM b 6 (*ʿs²r ṣdq*), KJA 23 (*ftt ḥs¹nt*) and KJA 28 (*mrʾt ḥdṯt*) where they follow the substantive and agree in number and gender. An adjectival expression is formed by the indeclinable noun *rb*/*rbt* with the qualified noun following in the genitive case. A clear example of an adverbial form (*s¹rr*, Ar. *surūr*$^{a\ n}$) is attested in KJA 12, KJB 13 and possibly TIJ 291.

4. Pronouns:

The first person singular detached pronoun *ʾn* is attested in a statement of simple authorship, KJC 646, and in the love texts KJA 97 and KJC 673. Several of the pronominal suffixes occur. Both masculine and feminine third person singular and attested attached to verbs (*ḫblth*, KJB 138; *nkh*, KJA 23, 24); the masculine appears with the verbal noun (*ks¹yh*, KJC 138), the substantive *kll* (KJC 42) and the preposition *b* (KJC 347). The first person plural, *-n*, occurs, indicating possession, with the nouns *ʾs²yʿ* (KJA 36, KJC 641), *ndm* (KJC 308), *wqʿ* (MNM b 6, TIJ 494). A pronominal suffix is not attested with the substantive *kll* when it refers to drawings. The relative pronoun is attested as *ḏ* and as *mn* in MNM b 6 and TIJ 494. The reduced form *m* in occurs in KJC 46.

5. Prepositions:

The preposition *l* is attested in the sense of 'to' and 'for' (KJA 232); *ʾl* occurs as 'towards' (XJB 31, KJC 310, 539); *b* as 'in' (KJA 24, 46 etc., see Ch.4.E.1), 'with' (KJA 20) and as 'by' of instrument (by means of) (KJC 139); *dn*, Ar. *dūna*, occurs by the meaning 'without' (KJB 138); *ʿl* as 'on' (AMJ 64) and as 'for' (KnEG 1, 2 etc.); *ʿn* as 'after' (KJC 138)[58] and *mn* as 'from' (KJC 641).

6. The definite article:

The definite article, *h*, is attested with the substantives denoting the subject of

---

[56] Röllig, in RTI B, which is a prayer of the *ḏkrt lt* type, interprets the *n* in the text as a plural ending but evidence from the texts found here indicates that, in this type of prayer, it is the first person plural pronominal suffix, see Appendix 2 for my reading of the text.

[57] It is possible that *s²ʿ* in AMJ 148 should be restored as *s²[y]ʿ* Ar. *šiyaʿ* a plural form of *šīʿah*, see Appendix 2.

[58] In the expression *bg̈ʿḥt hʿs¹ḥ ʿn ḥt* 'searching for male ostrich of these regions after male ostrich'

drawings although its use in this context is not very frequent[59] and, given that an artist is referring to a specific subject, the lack of definition in so many cases is strange perhaps indicating that a definite article should be supplied, the particle *h* on the few occasions it is used having a demonstrative force. It also occurs in AMJ 64 and KJA 20. The demonstrative *ḏh* occurs in MNM b 6.

7. The particles *w* and *f*:

The conjunction *w* is employed as a simple co-ordinate of verbs and nouns. It possibly has a sequential sense in KJA 28, although the interpretation of the text is somewhat doubtful. *f* introducing a series of subsequent actions with the meaning 'and so' occurs in KJA 23, 28 ?, KJC 138, 139 and in the second part of KJC 140. It is possibly used as a simple co-ordinate in KJB 13. *w* is used after a *l* N phrase to introduce a clause, although there are a few cases were it does not occur[60].

Texts introducing simple authorship, those referring to drawings, prayers and statements are sometimes introduced by *w* and in one instance of a statement (KJC 140) by *f*[61]. A distinction for the use of the particle cannot be made from the grammatical form of the following word which might be a proper name (*w* N, *w* N *ḫṭṭ*, *w ḏs²ry, w ds²r*), a pronoun (*w ʾn, w m ḥll* (KJC 46)) or a verb (*w ḏkr, w dʿ, f ṣlḥ*). In some instances a case might be made for interpreting *w* as a conjunction[62]. On the other hand *w* occurs as an introductory particle in Sabaic which is its most likely function in prayers and statements among the Hismaic texts and possibly among all the examples found in these inscriptions[63].

8. The vocative particle:

Among the Hismaic texts from the *Ḥismā* the vocative particle *h* is attested in prayers of the type *h* Div.N *l* N and in a doubtful text with an expressed imperative (KJC 115). Littmann (1904(a): 55; 1904(b): 120-1) explained the particle in Safaitic and Thamudic B from *ḥarf al-tanbīh, hā*, in Arabic (Wright I: 268) which occurs in the compound vocative *ʾayyuhā* (Wright I: 294; II: 85). A more satisfactory explanation is that of Winnett and Harding (1978: 47) who suggest it should be explained as a variant of the vocative particle found in Arabic which is most commonly attested as *ʾa*, *yā* and *ʾayā* (Wright II: 85). A form of the third occurs as *hayā* (Wright I: 294) which is attested in Safaitic *hy* (Winnett and Harding *ibid*, cf. Littmann 1940: 111).

When *lh* and *lt* are invoked in prayers of this type the particle *m* following the divine name is also used. *lh* is not attested elsewhere in Hismaic (except as a theophoric element in compound names). *lt* on the other hand does occur in prayers using *ḏkr* and *dʿ* but never with the *m* particle. This suggests that the use of *m* is restricted to *lh* and *lt* when they follow the vocative *h* and possibly only in this *particular* type of prayer.

A possible later parallel is found in Arabic *allāhumma* which is the most common form for expressing the vocative with the name of God (Wright II: 89D, Lane: 83c). The *m* has been explained as a substitute for the suppressed vocative

---

[59] In Safaitic it is almost always used in this context.
[60] See KJC 351 and TIJ 204.
[61] AMJ 12 might be an example of a name introduced by *f*.
[62] See Ch.4.A.3 and Ch.4.B.3.
[63] Beeston 1984: 31: 4 suggests the particle in Sabaic has a deictic force.

particle *yā* (Lane *ibid*), although occasionally in poetry the expression is found with the vocative particle *yā allāhumma* which corresponds more closely to the situation found in these types of prayers.

Ch.4

4. The Content and Structure of the Inscriptions:

The content of the Hismaic texts from *Wādī Judayyid* falls into five categories: A. Texts of simple authorship B. Texts accompanying drawings C. Prayers D. Curses E. Statements expressing emotions F. Statements relating to hunting activities. There are three texts (KJC 84, 278, 733) which, at present, defy any convincing translation.

A. Texts of simple authorship:

1.Texts of the form *l* N:

The overwhelmimg majority of texts of simple authorship are introduced by the particle *l*[1]. The author either limits himself to his own name or includes a patronymic and sometimes a more extended genealogy, occasionally, he adds his tribal affiliation. The filial relationship is expressed by *bn*[2] (and, in the few texts by women, by *bnt* or *bt*[3]) and in one instance by a variant form *mn*[4]. Tribal affiliation is indicated by *ʾl,* Ar. *ʾāl* 'family'[5], which is introduced by the relative particle *ḏ* and in KJC 641 by the preposition *mn* 'from'[6]. In AMJ 148 the relative particle *ḏ* is used alone[7].

There are several examples of extended genealogies, the longest going back ten generations (KJA 138)[8]. The extent of the genealogy expressed by a particular individual is not consistent and does not appear to depend on convention or the need to express, in every instance, the full extent of his knowledge of his predecessors[9]. In

---

[1] *l* is used to introduce Safaitic texts of simple authorship; in Tham.B both *l* (see, for example, JS 324, 328) and *nm* are used (Winnett 1937: 28-30; Littmann 1940: 49-51), in Tham.C *l* is used (see JS 18, 25, 31 etc.) and *w*, 'I am' see, for instance, JS 181, 184, 195.

[2] As in Safaitic, Tham.D and Tham.B although in some of the texts of the last type from *Ḥāʾil* Winnett reads *b* as indicating 'son of', see WHI 25, 32, 33.

[3] See Do XX 37, 11, KJC 329, TIJ 98, 99 and 280, the interpretation of all these texts is somewhat doubtful.

[4] See KJC 128 and Ch.3.A.6.

[5] I am using the word 'tribal' as a matter of convention. What type of social group *ʾl* in *ḏ ʾl* refers to is uncertain, see Harding 1969. *ʾhl,* Ar. *ʾahl*, occurs in the mixed text WTI 48a iii.

[6] *ḏ ʾl*, which occurs in Safaitic, is not attested in other types of Thamudic; *mn ʾl* occurs in Nabataean, see, for instance, JS Nab, 180, LP Nab. 43, 44 and Safaitic, WH 21. I am grateful to Mr Michael Macdonald for pointing out these references to me.

[7] In this text the author's grandfather's name and the name introduced by *ḏ* are both *ʾfṣy*.

[8] Several editors have remarked that the Thamudic texts rarely give long genealogies in comparison to Safaitic where extended genealogies are frequent; Littmann 1940: 23-24; Van den Branden 1966: 34; Winnett and Harding 1978: 20.

[9] For example, *ʾnʿm bn brd bn mtr* occurs in KJA 332, KJC 638 but with an additional generation in KJC 114 and with a further two in KJC 174. Variations in the length of

some texts the author continues his genealogy after the main statement, a form which also occurs in Safaitic. This is most frequently attested with texts accompanying drawings but not exclusively so[10].

Simple authorship, therefore, is expressed in most cases in one of the following forms: -

l N
l N *bn* N etc.
l N *bn* N (etc) *ḏ ʾl* (or *mn ʾl*) Tr.N

The *l* indicates the dative of possession 'for' used in the same way as the preposition is used in Arabic to refer to an author of a book etc. (Wright II: 149) and expressed in English by the preposition 'by'.

2. Texts of the form *w* N *ḫṭṭ*:

In two instances (RJC 150 and RJC 658) the phrase *w* N *ḫṭṭ* 'And N is [the] inscriber' which is mostly used to express the authorship of drawings and, sometimes, statements and prayers, is employed to express simple authorship[11]. In previous editions of Hismaic texts, *ḫṭṭ* has been translated as a verb and the statement rendered 'And N wrote [it]' or, where the text is accompanied by a drawing, 'And N drew [it][12]. The word order, however, is contrary to instances where verbs occur with a subject expressed, either by a proper noun or substantive, where the subject follows the verb. *ḫṭṭ* therefore must be either a participle *ḫāṭiṭ* or the noun *ḫaṭṭāṭ*[13]. I have translated the root *ḫṭṭ* in this context as 'inscribe' as the expression refers to both texts and drawings and seems to have a wider meaning referring to the activity of actually cutting in to the rock, closer to Ar. *ḫaṭṭaṭa* 'he drew lines'.

The recurrent use of the phrase *w* N *ḫṭṭ* seems to support the translation of *l* as 'by' (§.1). In complex statements, *l* N and *w* N *ḫṭṭ* are rarely found together. The reverse would be the case if *l* simply meant 'for'[14] since, given that the phrase 'And N is [the] inscriber ' is in use in the dialect, it would be natural for the inscriber to use it if the *l* meant 'for' which did not express or imply his actual writing of the text.

The infrequent use of the two phrases in conjunction also has implications as to whether the writing of the texts was done by a few 'scribes' at the request of

---

the genealogy written by a particular author also occurs in Safaitic, see *ẓn ʾl* in WH 53, 123, 299 etc.

[10] See Winnett and Harding 1878: 15, n.15 for this feature in Safaitic. See KJA 44, 76, 290 etc. In KJA 20 the author possibly writes his patronymic in the middle of a love text and in KJB 63 the author continues his genealogy at the end.

[11] JS 665 and 692 canot be used as examples of *w* N *ḫṭṭ* being employed to express simple authorship, as the editors have only included a few drawings in their facsimilies and so we do not know for certain whether the texts are accompanied by drawings or stand alone.

[12] I adopted this translation in King 1988.

[13] For a similar sentence form see the end of KJC 145 ' - *w m ʿz brr*'.

[14] Littmann 1943: viii.

others[15]. Occasionally this might have occurred, and joint texts (§ 6) were probably written by one of the authors, but if it was true in the majority of cases then, since 'N is [the] inscriber' was a phrase in use, there would be a high proportion of texts of the form *l* N[1] *w* N[2] *ḫṭṭ* where N[1] is the name of person for whom the text is being written and N[2] is the name of the man who wrote the inscription.

On the rare occasions where *l* N and *w* N *ḫṭṭ* are attested together, the subject of both phrases is the same, i.e. the texts are of the form *l* N[1] *w* N[1] *ḫṭṭ*[16]. *w* N *ḫṭṭ* is probably added for emphasis or to be explained by the desire of the writer to increase the length of his inscription, rather than adding significantly to the content, by using a familiar formula[17].

3. Texts introduced by *w l* and *w*:

a. AMJ 128 reads *(w) l nṣt bn sʿmn* and Rh 6 *w l mqtl bn bkr*. Both texts occur on rocks with several other inscriptions and it seems likely that the *w* here should be interpreted as a conjunction, *l* as a *lām auctoris* or is and the texts translated 'And by *nṣt* son of *sʿmn* ' and 'And by *mqtl* son of *bkr'* respectively. The *w*, thus conjoining the author's text with the others on the rock i.e. having read the names the author wants to include himself (and express his inclusion) in the group[18].

b. Names introduced by *w* alone occur in several texts among the present collection[19] and in those published in Harding and Littmann 1952[20]. The examples are very few and the function of the *w* in these texts is open to alternative interpretations. Where there are other texts on the rock[21] its function might be similar to that of *w* in AMJ 128 described above, used to express the author's inclusion in the group. Similarly, some of these texts occur on surfaces with contemporary drawings and the author might be expressing his participation in inscribing them, by conjoining his name to the text which acknowledges the drawing. Alternatively, the *w* N texts in these cases might be incomplete *w* N *ḫṭṭ* phrases which is a common method of expressing the authorship of drawings[22].

---

[15] Littmann 1904(b): 111-112; viii. KJA 28 is written by *bny* and *brd* although the subject of the text is *hnʾ*. They are not, however, scribes, see the commentary.
[16] See, however, KJB 58 – 58a where the situation is ambiguous.
[17] I am grateful to Mr Michael Macdonald for pointing out to me that the use might be emphatic.
[18] KJC 612 reads *w l* which might be at the start of a text with a similar structure to AMJ 128 and Rh 6. See also SIAM 44. For texts using *w l* associated with drawings, see § B.3.a below.
[19] KJA 219, 298, 352, KJB 150, KJC 35, 40, 41, 92, 647, 673a, 674, 727, 736.
[20] See, for instance, TIJ 129, 356 and 434 the last of which I would read *w s¹ ʿd bn tmlḫwr bn ʾys¹* (King 1988: 313 n.10). Less certain examples occur in TIJ 97, 98, 99 and (TIJ) 449a. AMJ 12 reads *fbr* which is difficult to explain as a name and where the *f* might be a particle, *f br* 'And *br*', on the other hand, see §. 4 below.
[21] See, for instance, KJA 219, 298, KJC 647, 727 and TIJ 129.
[22] See § B.2, below. In some cases there is insufficient space on the rocks for the texts to be continued, see KJC 40-41. See § B.3 for other texts (KJA 113 and KJC 744) where *ḫṭṭ* might have left out.

On the other hand, KJA 352, KJC 736 and TIJ 434 occur by themselves where such an interpretation of *w* as a conjunctive particle would be inappropriate and in these cases, and perhaps in all the instances quoted above, the *w* should be interpreted as an introductory particle, with a function similar to that occurring at the beginning of complex statements and probably occasionally used to express the authorship of drawings as well (see Ch. 3. C. 5 and § B.3.b below).

4. Texts with no introductory particle:

There are several instances where one word, which might be interpreted as a name, is written without any introductory particle[23]. The only clear instance of a name occurs in AMJ 14[24], otherwise the contexts are doubtful and the readings uncertain. It is also noticeable that the authors who have written their names frequently with an initial *l,* never seem to omit it as an alternative. Where, therefore, these possible names occur without an introductory particle, many of them are probably written as an experiment in inscribing rather than with the intention of writing a text[25].

5. Texts of the form *w ʾn* N:

The phrase *w ʾn*, Ar. *wa ʾanā*, 'And I am ' is used to introduce simple authorship in one instance (KJC 646). It occurs most frequently as an expression of authorship in Thamudic C and in several of the texts published by Winnett from the *Ḥā ʾil* area[26].

6. Joint authorship:

A few joint texts of simple authorship are attested. AMJ 136, TIJ 227 and CTSS lb (from outside the *Ḥismā*) are introduced by *l* and KJA 157 and TIJ 228 by *w*[27]. A love text of joint authorship occurs in KJA 28[28].

B. The authorship of drawings:

---

[23] See, for instance, AMJ 14, KJA 150b, 166a, 218, 256, KJC 31a, 476, 162 etc., LAU 1, 2, 20, 21, TIJ 56a, 280.

[24] Which reads *bnḫmr. w ʾl bn s¹ ʿdlh* in KJB 179 might be a separate text but, even if it is, the reading is ambiguous as the *w* might be an introductory particle, see the commentary to the text and § A.3.b above. TIJ 280 may read *ts¹b bt ʾr*, if this interpretation is correct, then it would be an instance of a text of simple authorship without an initial particle. There is no photograph of WAM T 17.

[25] In Harding and Littmann 1952 there are several texts which have been read without an initial *l*. Except in three instances (TIJ 56A, 178, 387), a case can be made that either there is a *l* or there could be a *l* obscured by damage to the rock surface. The examples given by Littmann 1940: 40-43 are all Taymanite except no. 9 which is Tham.B (no. 11 is a doubtful copy).

[26] For examples in Tham.C, see JS 181, 184, 195 etc. Examples from the *Ḥā ʾil* area include WHI 129, 136, 175.

[27] For instances in Saf., see Winnett and Harding 1978:17.

[28] The authors are not the subject of the text.

1. Texts of the form *l* N:

The subjects mentioned in the drawings are *bkr* Ar. *bakr* 'young male camel'; *bkrt*, Ar. *bakrah*, 'young female camel'; *gml*, Ar. *jamal*, 'male camel'[29]; *frs¹*, Ar. *faras*, 'horse'[30]; *klb*, Ar. *kalb*, 'dog'; *klbt*, Ar. *kalbah*, 'bitch'; *w ʿl*, Ar. *wa ʿl*, 'ibex'. Authorship is expressed by a *l* N phrase, 'By N', either with or without an extended genealogy, which is sometimes expanded by (l) a substantive referring to the subject of the drawing or (2) the substantive *ḫṭṭ*, 'drawing' cf. Ar. *ḫaṭṭ*, pl.*ḫaṭūṭ*[31]. In some cases the latter occurs (3) in construct with a substantive naming the subject depicted[32] and the word *kll*, 'all', Ar. *kull*, is used to mean that the author did all the drawing[33]. It always occurs after the substantive and has not been found with an enclictic pronoun in this context[34]. The patronym is sometimes written after the substantive. The article or demonstrative *h* occurs in KJB 70, 116, KJC 142, 222, 754.

Examples:

(1)	KJA 62	*l ʾmn w ʿl)*
	KJA 69	*l mṭy bkrt*
	KJB 70	*l mġny bn hn h w ʿl*
	KJB 116	*l mġny bn hwn h bkrt*
	KJC 142	*l ʾmn h w ʿl*
	KJC 359	*l s¹yr˚h bk[r][t]*
	KJC 470	*l mḫllt frs¹*
(2)	KJA 207	*l s²ṣr ḫṭṭ*
	KJB 8	*l ʾs²s² ḫṭṭ*
	KJB 53	*l ḏf(r)n ḫṭṭ* etc.
(3)	KJA 44	*l ḏ ʾb ḫṭṭ kll bn s¹m ʿn bn qn*
	KJB 74	*l s¹ ʿd ḫṭṭ w ʿl [w] klb*
	KJB 181	*l s¹yr ḫṭ(ṭ) kll*
	KJC 754	*l wb ḫṭṭ h w ʿl*
	AMJ 67	*l ẓḥn bn ---- bn ʿm ḫṭṭ gml*

2. Texts of the form *l* N¹ *w* N² *ḫṭṭ* and *w* N *ḫṭṭ*:

In three examples referring to drawings the *l* N phrase is expanded with the phrase *w* N *ḫṭṭ*, 'And N is [the] inscriber'.

KJA 132 *l kmy bn tmlh w kmy ḫṭṭ*

---

[29] See KJB 59.
[30] See the commentary to KJA 113.
[31] When *ḫṭṭ* is a substantive I have translated it as 'drawing' (cf.§ A.2) since 'inscription' tends to imply writing while 'engraving' has connotations which are not applicable to the rock art found here.
[32] See KJB 74, KJC 518, 754 etc.
[33] See Ch.6.A.
[34] cf. Wright II: 205-206. JS 665 has a *h* after *ḫṭṭ* which might be a pronominal suffix. The copy, however, is doubtful and possibly incomplete. *l ḫmmt kll* 'By *ḫmmt* all [of it]' occurs in JS 614.

KJC 749 *l s¹lm bn ẓ ʿnt w s¹lm bn ẓ ʿnt ḫṭṭ* [35]
TIJ 134 *l gryt bn ʿbd bn hml w gryt ḫṭṭ* [36]

I suggested above that the content of these texts (*l* N *w* N *ḫṭṭ*) is essentially repetitive[37]. More frequently the *l* N phrase is not written and (1) *w* N *ḫṭṭ* 'And N is [the] inscriber' is used as the sole expression of the authorship of drawings. In some instances (2) the subject of the drawing is expressed by a substantive in construct and *kll* is again used to state that the author did all the drawing himself. The inscriber's patronymic is quite often written after the word *ḫṭṭ*.
Examples:

(1) KJA 16 *w ʾs²ṣr ḫṭṭ*
KJA 55 *w ḏ ʾb ḫṭṭ*
KJA 76 *w s¹yr (ḫ)ṭṭ bn s¹lm* etc.
KJB 148 *w ḏ ʾb bn s¹m ʿn ḫṭṭ*
KJB 155 *w ʾs²ṣr bn zdqm ḫṭṭ* etc.
KJC 442a *w ʿrs ḫṭṭ bn ḥrs¹ bn s¹lm* etc.
(2) KJC 30 *w zdn ḫṭṭ kll*
KJC 39 *w ftyt ḫṭṭ bkrt*
KJC 48 *w grf ḫṭṭ bkrt w frs¹*
KJC 51 *w grf ḫṭṭ w ʿl*
KJC 60 *w grf ḫṭṭ bkr*
KJC 144 *w zdlh ḫṭṭ klbt*
KJC 408 *w rfd ḫṭṭ w ʿl*
AMJ 52 *w ḥgg ḫṭṭ kll bn bglt*
AMJ 55 *w ġlmt ḫṭṭ h w ʿl kll*
WAM T 34 *w gryt bn ʿbd ḫṭṭ b(k)rt*

3. Texts beginning with *w l* and *w*:

a. There are two texts accompanying drawings which start with *w l*:

KJB 59 *w l s²ṣr ḫṭṭ bkrt w gml*
KJB 61 *w l drs¹ᵒ*

Since there are several other texts on the rock face as well, it is possible that *w l,* in both these cases, should be translated 'And by --', as suggested for AMJ 128 and Rh 6 (see § A. 3. a above), whereby the authors are expressing their inclusion in inscribing the drawings.

There are, however, some unpublished texts introduced by *w l* where the following word is not a proper name and where I would translate *w* as an introductory particle and the *l* as similar to Ar. *la* 'indeed' and used to emphasize the content of the

[35] The interpretation of this text is doubtful, see the commentary.
[36] Although they are not shown on the published facsimile, the rock face is covered in drawings.
[37] See § A.2.

inscription[38]. I think it is quite likely that *w l* in KJB 59 should also be translated in this way, although until we have more examples the interpretation must remain open to question.

b. KJA 113 and KJC 744 read *w ʿbd bn s¹yr frs¹* and *w lṯ h w ʿl* where there might be an intentional ellipse of *ḫṭṭ*[39] or the word might simply have been left out by mistake[40]. However, more examples of this kind would suggest the texts are complete and the *w* is an introductory particle equivalent to that found in prayers, statements and texts of simple authorship (see Ch.3.C.7 and § A.3.b above).

In some cases there is more than one signature accompanying a drawing clearly indicating that several individuals participated in inscribing it[41]. In all the examples the artists claim co-authorship of the drawing in individual inscriptions rather than in a joint text.

C. There are four recurrent types of prayers among the texts[42].

1. Invocations using *ḏkr*:

Most prayers using the word *ḏkr*, Ar. *ḏakara,* 'remember', begin with a *l* N authorship phrase but there are some exceptions. In the majority of cases the invocatory clause is introduced by *w* which is followed by perfect verb with an optative sense, the deity's name and the object of the verb[43]. In some of the texts the

---

[38] The texts are among a corpus recorded by David Jacobson. The use of *w l* would be similar to that of *bly* found at the beginning of some Nabataean inscriptions JS Nab. 44, 95 etc. and *wly* in JS Nab. 373 (*bly wly dkyr ḥlyṣw br s²ly*). Jaussen and Savignac 1909 translate them as 'Oui!' etc.

[39] Restored versions of the texts might read *w ʿbd bn s¹yr [ḫṭṭ] frs¹* and *w lṯ [ḫṭṭ] h w ʿl*. I do not think KJA 113 should be translated as 'And *bd* son of *s¹yr* is [the] horseman' as there are no other examples among Hismaic texts or, as far as I know, in Saf. where the authors acknowledge themselves as the subject of the drawings.

[40] The lack of space on the rock face with KJA 113 might explain why the word was left out, but there is plenty of room on the rock with KJC 744. There are instances of mistakes in the texts (see Ch.3.B.10) and there are also prayers where a word (the verb 'grant') is implied in the meaning but not written (see § C.3).

[41] See Ch.6.A.

[42] For forms of prayers that are only attested once, see § 5 below.

[43] The vocative particle is not attested before the deity's name with the optative either here or in the texts using *dʿ* (see below). The same is true in Safaitic see, for instance, CSNS 2 , where there is no vocative and the word order is the same as in texts using *ḏkr* under discussion here, *l ws¹ʿ bn ʿwḏ w s¹ʿdh rḍw* 'By *ws¹ʿ* son of *ʿwḏ*, and may *rḍw* help him'. Clark says the text is unusual because of the lack of the vocative and because the divine name occurs after the verb. He is, however, confusing the structure of texts using the *optative* with that of texts using the *imperative*. In the latter, the vocative *is* most frequently used and the divine name *does* precede the verb. See, for instance, King 1985: 50 where I quote some examples of Safaitic invocations: (1) using the optative, *f wqyh rḍw* (I divided up the letters incorrectly in the publication), 'and may *rḍw* protect him' (2) using the verb 'grant' implied in the text, *w h rḍy ʿyrt m ḥwlt,* 'and O *rḍy* [grant] vengeance from [the] *ḥwlt*' (3) using an expressed

author concludes with a *w* N *ḫṭṭ* phrase, which in KJC 711 and AMJ 137, is the sole expression of authorship[44]. In all the examples from *Wādī Judayyid* the prayers are addressed to *lt* but in AMJ 46 *ds²r* is invoked.

The object of the prayer is denoted either by a proper noun or a substantive. The latter is sometimes suffixed with the first person plural pronoun *-n* and the substantive *kll*, 'all' is often used in addition, either in construct with the main noun or with the third person plural pronominal suffix *-hm*. The prayers are made either for an individual or for a list of people or a group.

The substantives, which are used, express a wide variety of relationships: *ʾs²yʿ* (KJA 36), 'companions' (cf. Ar. *šayʿ*, pl. *ʾašyāʾ*)[45]; *ʾl* (JS 35), 'family' (cf. Ar. *ʾāl*); *ʾhl* (KJC 42), 'family' (cf. Ar. *ʾahl*); *kll rhṭ ṣdq* (CTSS 3), 'all true people', (cf. Ar. *raḥṭ* and *ṣidq*); *kll ʿs²r ṣdq* (MNM b 6) 'all true kinsmen', (cf. Ar. *ʿašīrah* and *ʿašir*); *ʿlm* (AMJ 148) 'chief' (cf. Ar. *ʿalam*); *kll mn yqry wqʿn* (MNM b 6) 'all who read our inscription'; *ndm* (KJC 202) 'boon companion', (cf. Ar. *nadīm*)[46]. In most instances where a group is mentioned the author gives his tribal affiliation.

A similar prayer *dkrt ʾlt(w)* occurs in Nabataean texts from around *al-ʿUlā* and in several of the texts from the shrine at *ʿAyn Shallālah* in *Wādī Ramm*[47]. In Safaitic there is only one occurrence where *ḏkr* is used in a prayer. The text is unpublished (Stehle 158706) and in it *ds²r* is asked to remember *rhṭ ṣdq* 'true people' and curse *rhṭ s¹ʾ* 'wicked people' cf. Ar. *sū*[48].

In all the examples of this prayer, except one, KJC 272, there is an explicit expression of authorship and in no instance does the author's name occur in the list of people for whom the invocation is made. The prayer is written by the author for others. KJC 272 *w ḏkrt lt ʿbdḥrṯṯ,* on the other hand, is possibly a prayer written by the author for himself[49], although, since this is the only possible example of the

---

imperative verb, *f h ʾlt flṭh,* 'and O *ʾlt* deliver him' (there is a misprint in the publication where vocative particle has been left out). An exception to this in Hismaic occurs in KJC 115. The meaning of the text, however, is unclear.

[44] In KJC 202 and AMJ 46 *l* N and *w* N *ḫṭṭ* are used.

[45] The word is well attested in Saf. in a different context, see WH 682, 975 etc. In AMJ 148 it is possible that a plural form *šiyaʿ* should be restored in which case, both there and the plural *ʾašyāʿ*, should probably be translated from Ar. *šīʿah* 'followers'. See the commentary to AMJ 148 in Appendix 2.

[46] The reading and interpretation of the expression *kll ḏyrn* in RTI B are uncertain, see the examples below and Appendix 2.

[47] See JS Nab. 212, 213 and Savignac 1933 AS nos. 3, 7, 8 etc.

[48] The inscription comes from between *Jabal Ašqāf* and *Qaṣr Burquʿ* in the *Ḥarrah* of northern Jordan and is now in the Field museum Chicago. The text is going to be published by Mr Michael Macdonald and I am grateful to him for allowing me to quote it here.

[49] There is evidence that where the author is not the subject of a prayer or statement, an explicit expression of authorship is used (§ G below). Here, therefore, where there is no explicit expression of authorship it is possible that *ʿbdḥrṯṯ* is the subject and the author. For texts using *dʿ* which were probably written by the author for himself, see § 2, below.

invocation being made by the author for himself, this interpretation must at present remain uncertain.

The prayers express a blessing on an individual or frequently on a group. In this context it is significant that the author very often gives his tribal affiliation, which, given that it is rarely mentioned in other texts, suggests that it is relevant here to the expression of the blessing which is often made for a social group (see the list of substantives above), although not always an *ʾl*[50]. The use of the first person plural pronoun suggests that, at least on occasion, the author is writing the text not only on his own behalf but in the presence of and on behalf of at least one other person[51].

In MNM b 6 the blessing is used on those who read the inscription. Its function here is comparable to blessings occurring in Safai tic where, for example *ġnmt* (booty) and *s¹lm* (peace) is invoked for those who leave the inscription alone. Stehle 158706 quoted above which, a1though it is Safaitic, uses the same vocabulary as the Hismaic texts suggesting that the usage is similar in both dialects, opposes *ḏkr* with *l ʿn*, 'curse' (cf. Ar. *la ʿana*) a verb which is used in both Safaitic and Hismaic to express a curse on those who damage inscriptions.

Evidence that the prayer is used as a memorial text for the dead, either associated with burials or standing alone, is inconclusive. Unlike some of the Safaitic inscriptions used in this context, the content of the attested texts does not offer any clue. Clark (1980: 126-127) suggests that his inscriptions are written on tombstones but, as with the two texts written on stone objects (a tripod saucer and a bowl)[52], which may have been grave offerings, the provenance and context in which they were found is unknown. Equally, KJC 711 from the present collection is one among several inscribed stones which were found on a grave, a1though it is uncertain as to whether the inscriptions are contemporary with the burial or whether the stones were re-used after being inscribed[53].
Examples:

KJA 36 *l yḏr bn ʿbd bn yḏr bn whblh ḏ ʾl zydt w ḏkrt lt ʾs²y ʿn*
By *yḏr* son of *ʿbd* son of *yḏr* son of *whblh* of the tribe of *zydt*; and may *lt* remember our companions

KJC 42 *[l] (ʾ)fl ḏ ʾl gỷ (w) ḏkrt lt ʾh(l) kllh*
[By] *(ʾ)fl* of the tribe of *gỷ*; and may *lt* remember [the] family all of it

KJC 202 *l ḥg bn s ʿdt [w] [ḏ]krt lt ndmn ʿbd ʾl(ʾ)[ḥ]wr bn mḥwr w ḥg ḫṭṭ*
By *ḥg* son of *s ʿdt*; [and] may *lt* remember our boon companion *ʿbd ʾl(ʾ)[ḥ]wr* son of *mḥwr*; and *ḥg* is [the] inscriber

KJC 272 *w ḏkrt lt ʿbdḥrṯt*
And may *lt* remember *ʿbdḥrṯt*

KJC 641 *l ʿly bn ʾṣfr mn ʾl mzn w ḏkrt*
By *ʿly* son of *ʿṣfr* from the tribe of *mzn*; and may *lt* remember our

[50] In AMJ 148 and JS 35 the names of the social groups are mentioned in the prayer.
[51] His function would not be exactly that of a 'scribe' but more of a representative.
[52] Naveh TSB C and CSP 2.
[53] See, however, Ch.7. The other inscriptions found near or on the graves are just names, some of them possibly of people who have written texts elsewhere in Sites A, B and C.

companions, all of them

KJC 711 *w ḏkrt lt zbʿ w blṯ̊ʾw ʿmrʾw zd --- (s¹)[ʿ]dʾl ḫṭṭ*
And may *lt* remember *zbʿ* and *blṯ̊ʾ* and *ʿmrʾ* and *zd* ---; and *(s¹)[ʿ]dʾl* is [the] inscriber

AMJ 46 *l ḥbb bn bnlh ḥbb w ḏkr ds²r s²kmlh w ḥbb ḫṭṭ*
By *ḥbb* son of *bnlh* son of *ḥbb*; and may *ds²r* remember *s²kmlh*, and *ḥbb* is [the] inscriber

AMJ 137 *ḏkrt lt ʾlʿn w wtr ḫṭṭ*
May *lt* remember *ʾlʿn*; and *wtr* is [the] inscriber

AMJ 148 *l bnt bn ġnṯ bn ʾfṣy w ḏkrt lt ʾfṣy w ʿlm[]h w ʿqrb w ʿwḏ w s²[y]ʿn kllhm w bnt ḫṭṭ ḏ ʾfṣy*
By *bnt* son of *ġnṯ* son of *ʾfṣy*; and may *lt* remember *ʾfṣy* and its chief and *ʿqrb* and *ʿwḏ* and our followers all of them, and *bnt* is [the] inscriber who is of *ʾfṣy*

CSP 2 *---]m bn tmds²r bn flgt bn wtr bn ṣr̊m w ḏkrt lt ṣr̊m w tm w ʿm w ʾs¹d w ḥ(d)*
---]m son of *tmds²r* son of *flgt* son of *wtr* son of *ṣr̊m*; and may *lt* remember *ṣr̊m* and *tm* and *ʿm* and *ʾs¹d* and *ḥ(d)*

CTSS 1a *l mkr bn rs²ʾt w ḏkrt lt ʿmr w s¹ʿdʾl w wʾl w ḫlf w fṣ w ʿṣm w lws¹ w ḥzmt w ʾs¹d w grmlh w ʾys¹ w bnʾmt*
By *mkr* son of *rs²ʾt*; and may *lt* remember *ʿmr* and *s¹ʿdʾl* and *wʾl* and *ḫlf* and *fṣ* and *ʿṣm* and *lws¹* and *ḥzmt* and *ʾs¹d* and *grmlh* and *ʾys¹* and *bnʾmt*

CTSS 3 *l ṣht bn wd ḏ yl nʾlt w ḏkrt lt kll rhṭ ṣdq*
By *ṣht* son of *wd* of the tribe of *nʾlt*; and may *lt* remember all true people

JS 35 *l (s¹)ʿdlh bn b(r)d ḏ ʾl wly w ḏ(k)r(t) (l)t ʾl wly w ---*
By *(s¹)ʿdlh* son of *b(r)d* of the tribe of *wly*; and may *lt* remember the tribe of *wly* ---

JS 179 *l ʾs¹lh [w] ḏkrt lt ʿbd bn s²hl*
By *ʾslh*; and may *lt* remember *ʿbd* son of *s²hl*

JS 670 *w ḏ(k)rt lt (ġ)tm-bn*
And may *lt* remember *(ġ)tm---*

KU 2 *l ʿqrb w ḏkrt lt ʾḏnt w wtr f h lt s¹lm w qbll*
By *ʿqrb*; and may *lt* remember *ʾḏnt* and *wtr*, and O *lt* [grant] security and acceptance

Meek *l ʿqrbn bn ġṯlh ḏ ʾl mʿnʾl w ḏkrt lt ʾs¹lmt w tmlh w (r)hdt w mqm w ns¹r w tm*
By *ʿqrbn* son of *ġṯlh* of the tribe of *mʿnʾl*; and may *lt* remember *ʾs¹lmt* and *tmlh* and *(r)hdt* and *mqm* and *ns¹r* and *tm*

MNM b 6 *l wtr bn tmlh bn wtr bn ms¹lm ḏ ʾl mny w ḏkrt lt mḥrs¹ bn ḫlflh bn whbn w kll ʿs²r ṣdq w kll mn yqry wqʿn ḏh*
By *wtr* son of *tmlh* son of *wtr* son of *ms¹lm* of the tribe of *mny*; and may *lt* remember *mḥrs¹* son of *ḫlflh* son of *whbn* and all true kinsmen and all who read this inscription of ours

MNM c 7 *l ʾs¹lm bn ʿbdmk bn khl bn ʿbdmk ḏ ʾl rbt [w] ḏkrt lt ns¹k [w] mys¹ [w] ʿwḏ s¹nt kbn s¹qy rʿrbt*
By *ʾs¹lm* son of *ʿbdmk* son of *khl* son of *ʿbdmk* of the tribe of *rbt*; [and] may *lt* remember *ns¹k* [and] *mys¹* [and] *ʿwḏ* the year the watering place

dried up in the pastures of *rbt*

Naveh TSB C *l ʾbmlk w ḏkrt lt ḫms¹ w mlḥ w s² ʿlh w krt w ʾʿṣ w ʾs¹d w ḥmgn w ʿwḏ w ʾḏnl w bs¹ ʿd---*
By *ʾbmlk*; and may *lt* remember *ḫms¹* and *mlḥ* and *s² ʿlh* and *krt* and *ʾʿṣ* and *ʾs¹d* and *ḥmgn* and *ʿwḏ* and *ʾḏnl* and *bs¹ ʿd---*

RTI A *l tm ʿbḏt w ḏkrt lt bln*
By *tm ʿbḏt*; and may *lt* remember *bln*

RTI B *w ḏkrt lt kll ḏyrn w ʿbdḏn w ḥṭṭn [w] ? ġn w s¹ ʿdn w ḏkrt lt w wš¹l (w) l ʿnt [lt]*
And may *lt* remember all our harmed [ones] ? and *ʿbdḏn* ? and *ḥṭṭn* ? [and] *ġn* and *s¹ ʿdn* and may *lt* remember *wš¹l* and may [*lt*] curse

TIJ 58 *l km bn gmhr w ḏkrt lt ġṯ w ḥbk w ʿbb w bkr w hlʾ w qnfḏ w wd w ḥmlg w qnfḏ w gm ʿ*
By *km* son of *gmhr*; and may *lt* remember *ġṯ* and *hbk* and *ʿbb* and *bkr* and *hlʾ* and *qnfḏ* and *wd* and *ḥmlg* and *qnfḏ* and *gm ʿ*

2. Invocations using *d ʿ*:

Apart from the examples found at the *Wādī Judayyid* sites and from other areas in the *Ḥismā* the prayer is attested in an inscription of unknown provenance (SIAM 39a). Ar. *da ʿā* (from the root *d ʿw*) with a direct object means 'he called or summoned him'[54] and *da ʿā al-mayyit* 'he called upon the dead' i.e. he praised the dead by mourning for him and enumerating his good qualities. The inscriptions on Rock f at Site C suggest that the prayer is, at least sometimes, written by the author for himself[55] and, therefore, not exclusively used for the dead but perhaps the implication of *d ʿ* is that of 'praise or commend' whether the person is living or has died. Since the interpretation of the prayer is still so uncertain I have kept to a literal translation.

The formula of the prayers is similar to that employed with *ḏkr*: the invocatory clause is introduced by *w*[56] and a perfect verb with an optative sense is used[57]. The prayer is addressed to *lt* and *ḏs²ry* (also written *ḏs²r*/*ḏs²ry*). In all the examples we have, only one person is the object of the invocation, except KJB 135 where *lt* is asked to 'call' two people. None of the texts begin with *l* N and, where authorship is expressed explicitly, *w* N *ḥṭṭ* is used. There are several texts which have no explicit

---

[54] *da ʿā llāha* means 'he prayed to God' but in these texts the subject is clearly the deity; *da ʿā lahu* means 'he prayed for him or blessed him' but an indirect accusative is not attested here.

[55] KJC 758 *l tnn bn hnʾ bn zdqm*, KJC 761 *w d ʿ ds²ry tnn* and KJC 760 *l mlgn* and (on a different face) KJC 762. Although we do not know that the texts by *tnn* and *mlgn* are by the same two people (Ch.5.C), it would be a remarkable coincidence if four people, two of whom had written the name *tnn* and two of whom the name *mlgn*, had all inscribed on the same rock. It is, therefore, most likely that they are the same people and the authors wrote the prayers KJC 761 and 762 for themselves.

[56] The occurrence of *w d ʿt lt* in KJB 136 in the middle of the text suggests that the *w* is a particle and not a radical.

[57] An exception possibly occurs in TIJ 17a where *lt* is invoked. There is no feminine ending to the verb and either it has been left out or the verb is an imperative.

expression of authorship[58]. In KJB 136 the invocation follows an expression of love, although this does not seem to have any relevance to it and the text does not help to clarify the context of the prayer.
Examples:

KJA 171	*w d ʿ ḏs²ry grf w ʾn ʿm ḫṭṭ*
	And may *ḏs²ry* call *grf*, and *ʾn ʿm* is [the] inscriber
KJB 136	*rbt s¹q[m] w s²q b d ʿm w d ʿt lt fḏg w gḫfl w d ʿm ḫṭṭ*
	d ʿm feels much sick[ness], and may *lt* call *fḏg* and *gḫfl*, and *d ʿm* is [the] inscriber
KJC 260	*w d ʿ ḏs²r lḏf*
	And may *ḏs²r* call *lḏf*
KJC 362	*w d ʿt lt rfd w mṯy ḫṭṭ*
	And may *lt* call *rfd*, and *mṯy* is [the] inscriber
KJC 648	*w d ʿ ḏs²ry rb w ḏfrn ḫṭṭ*
	And may *ḏs²ry* call *rb*, and *ḏfrn* is [the] inscriber
KJC 761	*w d ʿ ḏs²ry tnn*
	And may *ḏs²ry* call *tnn*
KJC 762	*w d ʿ ḏs²ry mlgn*
	And may *ḏs²ry* call *mlgn*
AMJ 143	*w d ʿ ḏs²ry zmlt w ḏr ḫṭṭ*
	And may *ḏs²ry* call *zmlt*, and *ḏr* is [the] inscriber
AMJ 144	*w d ʿ ḏs²ry s¹r*
	And may *ḏs²ry* call *s¹r*
SIAM 39a	*w d ʿt lt s²bm*
	And may *lt* call *s²bm*
TIJ 17a	*(w) d ʿ[t] lt ʿ(m)rt*
	And may *lt* call *ʿ(m)rt*
TIJ 299	*w d ʿ ḏs²ry d ʿm w ġnmt ḫṭṭ*
	And may *ḏs²ry* call *d ʿm*, and *ġnmt* is [the] inscriber

3. Invocations of the form *h* D.N. *l* N. :

The most common type of prayer occurring in the texts from *Wādī Judayyid* are requests to the deities *ḏs²ry* (also written *ḏs²r* and *ds²r*) and *lh* and *lt*[59]. In most cases the prayer begins with the vocative particle *h* and the divine names *lh* and *lt* are always followed by the particle *m*[60]. On the whole, the request is not expressed and the verb 'grant' and the substantive denoting the request are omitted. The deity's

[58] See the examples on Rock f from Site C quoted above and see KJC 260, 761, 762, AMJ 144, SIAM 39a, TIJ 17a. Since there is no explicit expression of authorship, these were probably written by the author for himself, see § G.(1).
[59] Apart from the examples from the *Ḥismā*, a similar prayer occurs in Do XXVI 49, 5 from the *Madāʾin Ṣāliḥ/Taymāʾ* area which, although, the *m*'s have an unusual stance, should probably be classed as Hismaic.
[60] See Ch.3.C.8. In KJB 42 it is possible that the prayer occurs with neither of the vocative particles although the rock is worn at the beginning of the text and the reading might be incomplete.

name is followed by the preposition *l* 'to' and a proper name[61].

Where the request is made explicit the verb 'grant' is still implied and the nature of the request expressed by a substantive or substantives. The substantives attested in this context are: *ġny,* (KJB 1) 'freedom from want', (cf , Ar. *ganā ʾ*); *s¹ ʿd,* (KJC 405, 442b, 555), 'good fortune', (cf . Ar. *saʿd*); *s¹b,* (KJC 145) 'gift, benefaction', (cf . Ar. *sayb* and Sab. *syb); ngy,* 'deliverance' (cf. Ar. *nagā ʾ*), which occurs in construct - *s¹ ʿd ngy,* (KJC 555) 'the good fortune of deliverance', 62 and *ṯry,* 'sufficiency' (cf. Ar. *ṯarā ʾ*)[62]. In most of the texts, the substantive is written after *l* and the proper name but there are two instances where it occurs immediately after the divine name[63].

In two instances what is requested is a person denoted by a proper name. In KJB 86 the context in which *ḏb ʿn* is being requested is unclear, but in KJE 138 the person, a woman, is being asked for by a would-be lover[64].

There are four texts where the prayer is introduced by *w*. In AMJ 124, and in one incomplete and doubtful example from Site E, KJB 104b, the vocative particle is used. In KJB 1 and KJC 369 the texts are introduced by *w* without the vocative particle before the divine name and an optative form of the verb should be restored than the imperative, 'And [may] D.N, [grant]', similar in structure to prayers using *ḏkr* and *d ʿ*.
Examples:

KJA 14	*h ḏs²ry l ʿḏ*
	O *ḏs²ry* [grant ?] to *ʿḏ*
KJB 86[65]	*h ḏs²ry l m ʿz ḏb ʿn*
	O *ḏs²ry* [grant] *ḏb ʿn* to *m ʿz*
KJB 93	*h ḏs²r l drs¹t*
	O *ḏs²ry* [grant ?] to *drs¹t*
KJB 138	*h ḏs²ry l ḥls¹ ʾḥlk dn s¹qm w dn ʿyt w dn bʾs¹ w ḫblth*
	O *ḏs²ry* [grant] *ʾḥlk* to *ʾḥls* without sickness and
	without impotence and without distress and she has driven him insane
KJC 28	*h ḏs²ry l ygq w nqṭs*
	O *ḏs²ry* [grant ?] to *ygq* and *nqṭs*
KJC 405	*h ḏs²ry l ʾgd s¹ ʿd*
	O *ḏs²ry* [grant] to *ʾgd* good fortune
KJC 442b	*h ḏs²ry s¹ ʿd l b¹ṣr*

---

[61] Despite the fact that the prayers do not have an explicit expression of authorship, this seems a more appropriate interpretation that 'by' in this context. Such an interpretation gives a more coherent translation when the texts mention a request, where, for example, 'O D.N by N [grant] substantive' lacks fluency.
[62] The requests made are paralleled, in some instances, in Safaitic although the substantives used are different, for example, *ġnyt* C 586, 2163 and *ngwt* C 4842.
[63] See KJC 442b and KJC 729.
[64] Another love prayer with a different structure occurs in KJA 20.
[65] This and KJB 93 occur on the same rock (L) with other examples of the prayer (KJB 91, 96, 96a ?).

O *ḏs²ry* [grant] good fortune to *bṯr*

KJC 555 *h ḏs²ry l m ʿz s¹ʿd ngy w try*
O *ḏs²ry* [grant] to *m ʿz* good fortune of deliverance and sufficiency

KJC 145 *h ltm l m ʿz s¹b w m ʿz brr*
O *lt* [grant] to *m ʿz* a gift, and *m ʿz* is dutiful

KJC 729 *h ltm try l m ʿzy*
O *lt* [grant] sufficiency to *m ʿzy*

KJA 340 *h lhm l lt*
O *lh* [grant ?] to *lt*

KJB 18 *h lhm l bn ʿml*
O *lh* [grant ?] to *ʿml*

Do XXVI,49.5 *h ltm l ml*
O *lt* [grant ?] to *ml*

KJB 1 *w w ḏs²ry l s¹d ġny*
[ ] And [may] *ḏs²ry* [grant] to *s¹d* freedom from want

KJC 369 *w ḏs²r l hm*
And [may] *ḏs²r* [grant ?] to *hm*

AMJ 124 *w h ḏs²ry (l) m ʿz*
And O *ḏs²ry* [grant ?] to *m ʿz*

4. Invocations using *s¹m ʿt*:

Ar. *sami ʿahu* means 'he heard him' and with an indirect accusative '*sami ʿa lahu*' 'he listened to him'. The word *s¹m ʿ* is attested in TIJ 312 and *s¹m ʿt* in three texts from Site C and in a text published by Jobling, AMJ 133. In KJC 46 1.3 where two deities are invoked *s¹m ʿt* is clearly not a verb and I have interpreted it as the verbal noun *sum ʿah* which is synonomous with *tasmīʿ* 'the making of one to hear' (Lane: 1429 a) and used here instead of the verb (Wright II: 74 Rem. a) to express the purpose of the offering mentioned in 1.2[66]. In the other texts the invocation would presumably express the purpose of writing the inscription. *s¹m ʿ* in T1J 312 is probably a perfect verb used to express an optative 'may he hear'[67]. *s¹m ʿt* occurs with an indirect accusative in KJC 115 and AMJ 133.
Examples:

KJC 46

1. *w m ḫll ḏy rh*
2. *ht ʿs²w w rs¹l*
3. *s¹m ʿt ḏs²ry w ktby*

1. And whoever has encamped, whilst taking refuge, in the low-lying ground
2. Give an [offering of] an evening meal and milk
3. That *ḏs²ry* and *ktby* may hear

---

[66] The structure being similar to that of the phrase *fa ʿalahu riʾāʾ ᵃⁿ wa-sumaʿtᵃⁿ* 'he did it to make men see it and hear of it'. Jobling 1986(a): 265 interprets *s¹m ʿt* as the second person singular perfect used to express an optative 'may you hear'.
[67] It is less likely that it should be interpreted as an imperative verb. See the structure of prayers using *ḏkr* and *dʿ*, § C.1 and 2 above.

KJC 115 *s¹m ʿt ḏ[s²]ry l zdn w ʿ(ṣ)bhʿh lt l ʾkln*
That *ḏ[s²]ry* may listen to *zdn* and bind ? him O *lt* ----[68]
KJC 649 *s¹m ʿt k[tby]*
That *k[tby]* may hear
AMJ 133 *s¹m ʿt ḏs²ry l s²s²-*
That *ḏs²ry* may listen to *s²s²-*
TIJ 312 *s¹m ʿ ḏs²ry fṣʿ*
May *ḏs²ry* hear *fṣʿ*

5. Invocations using *zrʿ*, *s¹b*, *ʿd* and *qdr*:

The verbs used in the prayers AMJ 145, KJC 317 and KJA 20 are only attested once[69]. They are attested in the perfect with an optative sense and the structure of the prayers are similar to those using *ḏkr* and *dʿ*[70]. None of the texts are introduced by a particle. *zrʿ* 'make sound strong' (cf. Ar. *zaraʿ* 'May God render him sound and strong'[71]) occurs in AMJ 133 and *s¹b* in KJC 317 which perhaps means 'give' (cf. the Ar. substantive *sayb* 'gift' and *s¹b* in KJC 145, and see the commentary to the text). *ʿd* and *qdr* occur in the love prayer KJA 20 where the interpretation of parts of the text is uncertain. *ʿd* is most probably 'return', (cf. Ar. *ʾaʿāda*) and *qdr*, in the following clause, 'cause' (cf . Ar. *qaddara* 'determine, ordain').

AMJ 145 *zrʿ ḏs²r ḥty ʿbd ḫṭṭ*
May *ḏs²r* make *ḥty* sound and strong, *ʿbd* is [the] inscriber
KJC 317 *s¹b ḏs²ry l lṯ ġny*
May *ḏs²ry* give ? to *lṯ* freedom from want
KJA 20 *ʿd ḏs²ry gḥf l h ybsʳʿb rḥm w b gnnt w b s¹rr ʾḫ bnʿbhʾ w qdr frḥt b mrʾt ḥdṯt*
May *ḏs²ry* return *gḥf* to the woman with tenderness and with madness (of passion ?) and with joy *ʾḫ* ? son of *bhʾ*, and may *[ḏs²ry]* cause happiness with a new woman

D. Curses:

The only curse occurring among the *Wādī Judayyid* inscriptions is KJA 107 where it is a continuation of a text and asks *ḏs²ry* to curse anyone who curses the man who has stated his love in the first part of the inscription.
KJA 105 *wdd qn ġlmt (w) lʿn ḏs²(r)y lʿn qn*
qn loved a young woman, and may *ḏs²(r)y* curse the curser of *qn*

The lack of a vocative before the divine name is paralleled in prayers using *ḏkr* and *dʿ* and indicates that verb is perfect, used to express an optative, rather an

---

[68] The interpretation of the second part of this text is doubtful.
[69] In addition to these, there is a prayer to *ḏs²r* from the Negev, WA 10386, see Appendix 2, the reading of the verb ? at the beginning is, however, uncertain.
[70] See § C.1 and C.2 above.
[71] And the name *zrʿlh* in AMJ 136 and *zrʿlhy* in Nabataean (Milik and Starcky 1975: 129).

imperative form. The object is expressed by the noun *l ʿn* (Ar. *laʿʿān*) in construct with a proper name[72].

E. Statements expressing emotions:

Recurrent vocabulary and structure are found in the love texts but in some cases where they continue beyond the commonly used words it is difficult to find coherent totally convincing translations (KJA 20 (a love prayer[73]), 23, 28, KJC 590, 659), perhaps inevitably at this stage, since we know so little about the language and have only a slight idea as to what kind of remarks or comments the authors might be making.

1. Love Texts using *rb*/*rbt*:

rb and *rbt,* 'much', (cf. Ar. many a--' and Hebrew *rab,* 'much') is used in construct with the substantives (either singly or combined) *s¹qm,* 'sickness' (cf. Ar. *suqm*)*; s²q* 'desire' (cf . Ar. *s²awq*)*; s¹rr*, 'happiness', (cf . Ar. *surūr*)*; ḫrṣ*, (KJC 45) (cf , the Ar. verb *ḫaraṣa* 'he (a man) was hungry and cold') and *ʿrt* (TIJ 297) 'madness (or vice)' (cf. Ar. *ʿurrah*). The phrase expresses sexual desire, the disquietude caused by it and the joy felt on fulfilment or with the anticipation of fulfilment.

In two 1ove prayers, KJA 20 and KJB 138[74], some of the above substantives and additional ones are used to refer to the emotions of love in different structures. In KJA 20 the author wants to be returned to a woman 'with tenderness, *b rḥm,* (cf. Ar. *ruḥm* 'tenderness' and Syr. *rᵉḥem* 'tenderness, affection'), 'with madness' *b gnnt* (cf. Ar. *junūn* 'loss of reason') and 'with happiness' *b s¹rr* (see *s¹rr* already mentioned above). In KJB 138 the author asks for a woman 'without sickness', *dn s¹qm* (see *s¹qm* above), 'without impotence' (cf. Ar. *ʿayya* 'he 1acked strength or ability') and 'without distress' (cf, Ar. *bu ʾs¹* and *ba ʾs¹* 'distress, misfortune')[75].

In the construction using *rb*/*rbt*, except in two examples (KJA 294 and KJB 63), the substantive(s) is followed by the preposition *b* (Ar. *bi*) and then a proper name[76] or a substantive (KJA 24 *ġlmt,* 'a young girl') or the pronoun *-h* (KJC 347), referring to the person who is experiencing the emotions - *rb s¹qm* etc. *b* N 'Much sickness etc. is in N'. The structure of the phrase is similar to Arabic *bihi dāʾun* 'in him is disease (Lane 141b and Wright 11: 175A) and *bihi ʿurratun* 'in him is madness' and I have translated it as 'N feels much sickness etc.'. In TIJ 291 there is no

[72] In Safaitic (for instance, C 3952, 3973) and in Hismaic, TIJ 494, the object of the verb in curses using *l ʿn* is expressed as a relative clause.
[73] See § C.6 above.
[74] See § C.3 and C.5 above.
[75] At the end of this text the author also states 'and she has driven him insane' *w ḫblth*.
[76] In one doubtful instance, KJB 31, the preposition possibly governs two proper names.

preposition after *s¹qm*[77]. In KJA 294 and KJB 63, no subject of the emotions is mentioned.

The construct *s²q s¹rr* occurs in KJB 31 'desire of happiness' and, possibly, in *s¹qm s¹rr* in KJA 24 and TIJ 264 'sickness of happiness'[78]. In KJB 31 and KJC 310 (both of which are damaged at the end) and KJC 539 the texts continue with the preposition *ʾl* 'towards' and in KJA 232 *l* is used followed by a proper name. In KJC 539 there follows a list of plural substantives denoting young women – *n ʿrt*, (Heb. *n^{ec}ara*); *ġlmt*, (Ar. *ġulāmah*); *bkrt*, (Ar. *bakrah*); *ʾrḫl*, (cf. Ar. *riḫl* pl. *ʾarḫul* 'a ewe'); *s¹l ʿt* (cf. Ar. *sil ʿ* 'cleft'). The substantive *ḥbb* (Ar. *ḥabīb* 'loved one') possibly occurs in KJC 67 but the letters are doubtful and the reading requires the restoration of the *ḥ*.

The texts are written without a *l* N phrase at the beginning except where the subject of the expression is either not mentioned (KJB 63) or only mentioned by a pronoun (KJC 347) or where the author is referring to somebody else in the expression (KJA 12 and TIJ 427), see § G below.

In two examples the text is expanded beyond the *rb*/*rbt* phrase. In KJB 135 the author has added an invocation and in KJA 12 the text occurs with a clearly subsequent clause *f nkh s¹rr* 'And so he had sex with her, happily'.
Examples:

KJA 24	*l ġ̲tlh w rb s¹qm s¹rr b ġlmt f nkh s¹rr* By *ġ̲tlh*; and a young girl feels much sickness of happiness and he had sex with her happily
KJA 46	*rb s¹qm w s¹rr b grf bn mhṣ* *grf* son of *mhṣ* feels much sickness and happiness
KJA 188	*rb s¹rr b mb ʿl* *mb ʿl* feels much happiness
KJA 232	*rbt s¹qm b km l ḥd* *km* feels much sickness for *ḥd*
KJA 294	*rb s¹rr* Much happiness
KJB 31	*----rb s²q s¹rr b ʿlṭ w mb ʿl ʾl--* *----ʿlṭ* and *mb ʿl* feel much desire of happiness for --
KJB 63	*l ġ̲tlh w rb s¹qm bn ʿn ʾl* By *ġ̲tlh*; and much sickness, son of *bn ʿn ʾl*
KJB 136	*rbt sq[m] w s²q b d ʿm w d ʿt lt fḏg* *w gḫfl w d ʿm ḫṭṭ* *d ʿm* feels much sickness and desire, and may *lt* call *fḏg* and *gḫfl*, and *d ʿm* is [the] inscriber

[77] The beginning of the text is damaged and the interpretation is uncertain. I have restored the preposition *b* after *s¹qm* and translated *s¹rr* at the end as an adverb 'happily' (cf. Ar. *surūr$^{a\ n}$*).

[78] The meaning of this is rather obscure unless it refers to the sickness or misery of unfulfilled happiness. There is a drawing of a camel between the *m* and *s* of the expression in TIJ 264 which might obscure a *w* and the conjunction might have been left out between the two substantives in KJA 24. For mistakes in the inscriptions, see Ch.3.B.10.

KJC 45 *rb s¹qm w s¹rr w ḫrṣ b ḏfrn*
ḏfrn feels much sickness and happiness and discomfort

KJC 79 *rb s¹qm b mb ʿl*
mb ʿl feels much sickness

KJC 121a *rb s²q b mb ʿl*
mb ʿl feels much desire

KJC 310 *rb s²q b s²mrḫ ʾl -ṯ°*
s²mrḫ feels much desire towards *-ṯ°*

KJC 347 *l ṯ ʿt w rb s¹qm bh*
By *ṯ ʿt*; and he feels much sickness

KJC 539 *rb s²q w s¹qm w s¹rr b hd ʾl n ʿrt w ġlmt w bkrt w ʾrḫl w s¹l ʿt w hd bn s¹m ʿn ḫṭṭ*
hd feels much desire and sickness and happiness towards young girls and young women and maidens and young girls and 'women', and *hd* son of *s¹m ʿn* is [the] inscriber

TIJ 291 --- *s¹qm [b] ʾlfʾl s¹rr*
--- *ʾlfʾl* [feels] sickness happily ?

TIJ 297 *rbt ʿrt b wḥd w mtr ḫṭṭ*
rbt feels much madness (or vice), and *mtr* is [the] inscriber

TIJ 427 *l ʾs¹ w rb s¹qm b lkt*
By *ʾs¹*; and *lkt* feels much sickness

2. Love texts using *wdd* and *nk*/*nyk*:

The verbs *wdd* 'he loved', (cf.Ar. *wadda*) and *nk* and *nyk*, 'he had sex with' (cf , Ar. *nāka*) are recurrent in love texts[79]. They are attested in simple sentences and in complex ones in which subsequent actions are expressed. *nk* occurs transitively[80] and *nyk* both transitively and intransitively. In KJA 23 *nyk* occurs in conjunction with *nk,* which suggests the former is a different form, most probably expressing a frequentative sense of the root. In KJA 23 *nk* is consequent on *wdd* and in KJA 24 on *rb s¹qm s¹rr*. The object of the verbs is expressed either with a proper name or with a substantive, *ġlmt, ftt* (KJA 23) (Ar. *fatāh* 'young girl'), *mrʾt* (KJA 20, KJB 129, KJC 590) (Ar. *marʾah* 'woman') and possibly *ʿzz* (KJA 6) (Ar. *ʿaziz* 'loved') although this last word might be a proper name. All texts are directly expressed except KJC 351 where *nk s¹m ʿn* follows a *l* N phrase and is not introduced by the particle *w*.
Examples:
wdd

KJA 23 *wdd hnʾ ftt ḥsnt f ġmt f ʾḏ f ns²rt*
hnʾ loved a beautiful young girl and he had sex with her and she was grieved, so he repeated (it) and she unfolded ??

---

[79] Both these roots are attested in other dialects. *wdd* occurs as a verb in Tham.C where it is always followed by a particle *f* (Winnett 1937:35; Winnett and Reed 1970: 74-75). In Tham.B the root occurs as a verb and as a substantive in both statements (for example, JS 286) and in prayers (see Winnett 1987: 241-2, no.4, 8, 9, 15, for example). Clear readings of *nk* occur in JS 98, 119, 123 (Tham.C), JaT 20a (Tham.B) and JS L 372 and of *nk* and *nyk* in Safaitic C 285, 2268, WH 231, 2146, 2147. In the latter dialect the texts are all begun with a *l* N phrase.

[80] It is possible that it is intransitive in KJB 179, see the commentary on the text.

KJA 105 *wdd qn ġlmt w l ʿn ḏs²ry l ʿn qn*
qn loved a young woman, and may *ḏs²ry* curse the curser of *qn*

KJB 13 *wdd s¹m ʿnq s¹rr f bql*
s¹m loved *ʿnq* happily and *bql*

KJC 110 *wdd s²mrh ġlmt w n ʿ[r]t ftnn*
s²mrh loved a young woman and a young girl, two seductresses

KJC 120 *wdd mb ʿl ġlmt*
mb ʿl loved a young woman

TIJ 295 *wdd mrʾlh ġlmt*
mrʾlh loved a young woman

nk/nyk

KJA 6 *nk rhs ʿzz w nyk*
rhs had sex with *ʿzz* (or a loved one) and made love repeatedly

KJA 8 *nk rhs¹n bnʾl*
rhs¹n had sex with *bnʾl*

KJA 23 *wdd hnʾ ftt ḫs¹nt f nkh f ġmt f ʾḏ f ns²rt*
See under *wdd* above.

KJA 24 *l ġtlh w rb s¹qm s¹rr b ġlmt f nkh s¹rr*
By *ġtlh*; and a young girl feels sickness of happiness and he had sex with her happily

KJA 32 *nk m(r)ʾmnt*
mrʾmnt had sex

KJA 92 *nʸ(k) gml mnh*
gml had sex with *mnh*

KJB 179 *nk qrfz wʾl bn s¹ ʿdlh*
qrfz had sex with *s¹ ʿdlh*

KJC 351 *l mʸ(ʿ)n nk s¹mʿn*
By *m ʿn*; he had sex with *s¹mʿn*

KJA 2 *ny[k] (g)-b rqb--*
-(g)b had sex repeatedly with *rqb--*

KJA 6 *nk rhs¹ ʿzz w nyk*
See under *nk* above

KJA 28 *nyk hnʾ ġlmt ʿṣ f s¹th w rṣt w bʾny w brd ḫṭṭ*
hnʾ had sex repeatedly with a young girl, with difficulty and he struck [her] on the buttocks and she closed up ?, and *bʾny* and *brd* are [the] inscribers

KJA 29 *nyk nht*
nht had sex repeatedly

KJB 127 *[n](y)(k) rʾḏ qyml f*
rʾḏ had sex repeatedly with *qyml* and

KJB 129 *nyk ng[](ʾ)t mrʾt*
ng[](ʾ)t had sex repeatedly with a woman

KJC 590 *nykʿ-- [m]rʾt ks¹by bṣ fʾlḫgbhns²mm*
-- had sex repeatedly with a woman ???

KJC 659 *nyk ʾmh mn s²h rʾ s¹fr*
ʾmh had sex repeatedly with *mn* desiring the sight of beauty ??

3. Love texts using *ʾn ġr b*:

The expression *ʾn ġr b*-- 'I am fond of--' (cf. Ar. *ġariya bihi* 'he became attached to it; fond of it') occurs in KJA 97 *ʾn ġr b s¹m b[n] ʿhl* and in a doubtful text KJC 673 *ʾ[n] ġr b kbr*. The expression consists of the first person singular pronoun, Ar. *ʾanā*, and the active participle followed by the preposition *b*. Unlike the statement of simple authorship using *ʾn* (see KJC 646), the expression is not introduced by the particle *w*.

F. Statement relating hunting activities:

There are three texts that mention activities, they are on Rock LV at Site C and all of them relate to hunting.

KJC 138 *s¹r zdhlh f ghḏ hr˚ʿ bġ˚ḥt h˚s¹ḥ ʿn ḥt w zdlh ḫṭṭ*
zd[ ]lh journeyed and so he exerted himself, hurrying, searching for male ostrich of these regions after male ostrich, and *zdlh* is [the] inscriber

KJC 139 *s¹lḥ zdn f ʾs¹dḥ f ġny b ks¹yh*
zdn armed [himself] and he killed and layed [a beast] on the ground, and so he became free from want by pursuing it

KJC 140 *f s¹lh b ʿr f ṣyd w ʿl*
And *b ʿr* armed [himself] and hunted an ibex (or ibex)

G. Expression of authorship of complex statements:

In complex statements (prayers, love texts, statements of activities) the author's name generally occurs as the subject of the text and thus he makes himself known[81]. The explicit expressions of authorship *l* N and *w* N *ḫṭṭ* (see § A.1-2, § B.1-2) are, therefore, only used:
(1) when the author of an inscription is not the subject of the text, for example[82]:

KJA 28 *nyk hnʾ ġlmt ʿṣ f s¹th w rṣt w bḏny w brd ḫṭṭ*
KJC 42 *l ʾfl ḏ ʾl gy w ḏkrt lt ʾhl kllh*
AMJ 145 *zr ʿ ḏs²r ḥty ʿbd ḫṭṭ*
TIJ 297 *rbt ʿrt b wḥd w mtr ḫṭṭ*
TIJ 428 *l ʾs w rb s¹qm b lkt*

(2) when he is not mentioned by name in the main part of the text, for example:

---

[81] Although of course in individual instances it cannot be proved that the author is the subject of the text.
[82] On Tham.C there is evidence that the expression *w ʾn* N 'And I am N' is used similarly as an explicit expression of authorship in complex statements when the author of an inscriptions is not the subject of the text. The frequent juxtaposition among Tham.C inscriptions in the JS copies of *wdd f* N texts and *w ʾn* texts, see, for instance, JS 137-138, 145-146, 153-154, 169-170, 171 (especially) suggests that the pairs should be read as one text *wdd f* N^1 *w ʾn* N^2 (see Van den Branden 1950(a): 402-404, 407).

KJA 12 *l ġṯlh w rb s¹qm s¹rr b ġlmt f nkh s¹rr*
KJB 63 *l ġṯlh w rb s¹qm bn ʿnʾl*
KJC 347 *l ṯ ʿt w rb s¹qm bh*
KJC 351 *l m ʿn nk sm ʿn*

(3) when the use of an explicit expression of authorship is essentially repetitive and probably emphatic, (see § A.2 and B.2), for example:
KJC 202 *l ḥg bn s¹ ʿdt [w] [ḏ]krt lt ndmn ʿbdʾl(ʾ)[ḥ]wr bn mḥwr w ḥg ḫṭṭ*
KJC 138 *sr zdhlh f ghḏʿhrʿ bġʿḥt hʿs¹ḥ ʿn ḥt w zdlh ḫṭṭ*

H. Content of Hismaic inscriptions which is not attested among the *Wādī Judayyid* texts:

The above analysis is limited to the type of content and structure found in the texts from *Wādī Judayyid*. It does not include the content found in Hismaic texts elsewhere which relate different activities. For example[83]:

w (n)ṣ s²gy f bt blgt ʿl h ḫml, 'And *s²gy* fled and was [here] at dawn on the tract of sand with pasture' (AMJ 64, Jordanian *Ḥismā*)
s¹rq zydqm ḥs², 'zydqm stole from *ḥs²'* (SIAM 44, *Basṭah*)
l N *w ʾḫḏ* 'By N; and he took possession' (TIJ 507, *Kilwā*)
l N *w ts²wq l* N, 'By N; and he longed for N' (JS 229, 247, *Madāʾin Ṣāliḥ* area)
l N *w ḥdṯ ṯyt* 'By N; and he made a sheepfold' (KWM 2, 13, Central Jordanian desert)
l N *w r ʿy* 'By N; and he pastured' (JS 661, *Tabūk* area)
l N *w zrb* 'By N; and he built an enclosure' (WAM T 10, 11, Jordanian *Ḥismā*),
l N *ṣr* 'By N; he returned to the encampment' (TIJ 204, Jordanian *Ḥismā*),
l N *w nẓr w--* 'By N; and he was on the look out and --' (WAM T 60, *Taymāʾ* area)
l N *w wgm ʿl* N, 'By N; and he grieved for N' (KnEG 2, Jordanian *Ḥismā*, KWM 1, Central Jordanian desert, NST 1, Amman area, TIJ 494, Kerak area, WTI 11, Jawf area),
l N *w wgm ʿl* N *w bny*, 'By N; and he grieved for N, and he built', (KnEG 3, Jordanian *Ḥismā*),
l N---*w wḥd* 'By N ---; and he was alone' (JS 658, *Tabūk* area),
By N *w lh rgm,* 'By N; and to him belongs a cairn' (JS 607, *Tabūk* area)
By N *w lh ṯyt,* 'By N; and to him belongs a sheepfold' (KWM 15, Central Jordanian desert)
---f h ds²r s¹lm w ġ--, '--and O *ds²r* [grant] security and –' (JS 658 bis, *Tabūk* area)
---f h lt s¹lm w qbll, '—and O *lt* [grant] security and acceptance' (KU 2, *Maʿān/Uḏruḥ* area)
---f h lt (ġ)nyt, '--- and O *lt* [grant] sufficiency' (JS 655, *Tabūk* area)
---w l ʿnt lt mn yḫbl wq ʿn [w]q ʿn, '--- and may *lt* curse whoever damages our inscription' (TIJ 494, Kerak area)
--(w) l ʿnt [lt], '--- and may [*lt*] curse' (RTI B, *Jīza*, south of Amman)

[83] The examples listed here do not include uncertain interpretations or every occurrence. For a complete list of the vocabulary in the published texts, see Appendix 3. The prayer in KU 2 and the curses in RTI B and TIJ 494, listed towards the end of the present examples, are all preceded by invocations using *ḏkr*, see § C.1 above. For the script of KU 2, KWM 2 and RTI B, see Ch. 2. I (2).

Unlike the texts from *Wādī Judayyid,* the majority of these are expressed by an expanded *l* N phrase[84], which is almost consistently used in Safaitic, and have the type of content which is typical of Safaitic[85] and in some instances similar to that found in the small groups of texts, which I have suggested should be placed in different categories[86], that have been published from the *Jawf*, *Madāʾin Ṣāliḥ* and *Hāʾil* areas[87].

I. The features of content and structure of the texts from *Wādī Judayyid* and those of Safaitic, Thamudic B, C and D:

The Hismaic texts from *Wādī Judayyid* have features of content and structure which are distinctive to this category:

1. The use of *w* N *ḫṭṭ* referring to both drawings and inscriptions as an explicit expression of authorship.
2. Prayers using *ḏkr* and *dʿ* expressed with an optative perfect.
3. Prayers of the type *h* D.N. *l* N (substantive).
4. Prayers using *s¹mʿ* and *s¹mʿt (l)*.
5. Love texts using *ʾn ġr b*.

and possibly

6. Love texts using *rb*/*rbt*.
7. Recurrent examples of directly expressed texts introduced by *w*

although there is evidence that these last two are shared with other types of Thamudic[88].

Equally, there are several features found in the texts from this area which are shared with Safaitic and other types of Thamudic. For instance, texts of simple authorship introduced by *l* occur in Safaitic and as an alternative form in Thamudic B and C[89]; texts accompanying drawings, introduced by a *l* N phrase and naming the subject depicted, occur in both Safaitic and Thamudic B[90] and prayers directly expressed using a vocative particle + D.N at the beginning occur in both Safaitic and Thamudic B, although in both these dialects the imperative verb is always used[91].

There are also features of structure and content which are *only* attested in Safaitic and features that are *only* attested in other types of Thamudic. The writing of extended genealogies and the use of *ḏ ʾl* to indicated tribal affiliation are distinctive

---

[84] The exceptions are AMJ 64 and SIAM 44.

[85] For example, *ʾḫḏ*; for instances of *bny, ts²wq, rʿy, ṣr, wgm, wḥd*, see the lexicon in Winnett and Harding 1978; for a text using *lh rgm*, see WH 3420; for similar types of prayers, see WH 177, 397, WH 1001, 2168 and for a similar curse, see WH 181.

[86] See Ch.2. I (1).

[87] See, for example, WTI 18, 40, 84, JS 27, 596, WHI 127, 150, 151.

[88] A *rbt* phrase possibly occurs in Tham.D text, JS 213 which reads *rbt s²q b yʾl (b)n ʾmts²krn*, the copy is rather doubtful however. An introductory *w* occurs in the expression *w ʾn* N 'And I am N' which is used to express texts of simple authorship in Thamudic C.

[89] See, for instance, JS 324, 328 (Tham.B); JS 86, 87, 95 (Tham.C).

[90] For instances in Thamudic B, see HU 226, 494.

[91] For instance, WH 162, 726 (Safaitic) and JS 404, 492-493 (Thamudic B).

Safaitic features whilst the use of *w ʾn* (And I am) to introduce simple authorship is typical of Thamudic C and the high proportion of love texts is a well-attested feature in all Thamudic. The use of direct expression is typically Thamudic B and C and the use of an expanded *l* N phrase (although we still do not know how extensive this is in Hismaic) is typically Safaitic.

A characteristic, therefore, of the content and structure of the Hismaic texts from *Wādī Judayyid* is that, apart from features which are only found in the dialect, it also combines features found in other types of Early North Arabian graffiti.

5. The Names:

The Index of names after the edition contains an etymological and comparative study of the names in the texts from *Wādī Judayyid* and from all the published Hismaic texts known to me. Whilst I have edited the material in compiling the index, I have not, except in a very few instances suggested particular explanations for the names but listed various possibilities, as, for reasons given below (§ B.2), I doubt we are able to justify doing more than that. In the majority of cases, the list of alternatives mentioned is not exhaustive and the most important information that the index provides, in this respect, is the great variety of ways in which the names can be interpreted.

A: Compound names:

1. Theophoric and *Basileophoric* names:

a. The structure:

The lack of *matres lectionis* means that it is, on the whole, impossible to identify the morphological type of individual names where the non-theophoric elements might be a verb or nominal form. The only basis on which to attempt such a reconstruction is an assumed correspondence of certain names in, for instance, Nabataean and Arabic or from Greek transcriptions of the names. The compounds might be of three different types:

i) A verbal sentence expressing a statement or wish.

ii) A substantive or participle used as a predicate.

iii) A nominal form in construct with the divine name, for instance *tm*, *ʿbd,* 'Servant of D.', *mrʾ* 'Man of D.', *ḥbb*, *wdd* 'Beloved of D.', *rbb* 'Fostered (one) of D.', *ʾs*[1]*, s*[2]*km, whb* 'Gift of D.', which also occurs as an infinitive, where there is an optative implication, as suggested by *zd* 'Increase of D.', 'May D. increase', *ġṯ* 'Help of D.', 'May D. help'[1].

b. The elements:

The elements which are attested in theophoric and *basileophoric* compound names are listed in Appendix 5a-b. In the majority of cases the non-theophoric elements occur in an initial position but there are two possible instances (*ʾlʿn, ʾlwd*[2]) where the deity's name occurs at the beginning[3]. Some of the non-theophoric elements are not previously attested in Harding 1971 as parts of theophoric compounds. However, where they do not occur they usually are attested as simple names or as elements in Nabataean compounds[4].

---

[1] For this morphological type, see Madonald 1991. Names constructed with *s*[2]*km* and *whb* might be of this type i.e. 'May D. give', *s'* might be 'Companion of D.' or 'May D. by a companion'.

[2] *ʾlwd* is ambiguous as it might be a variant form of *ʾlwḏ*. The reading of *ʾlʿn* in AMJ 37 cannot be checked on the published photograph.

[3] The form occasionally occurs in Safaitic see *ʾlwhb*, HIn 72, for example.

[4] See Appendix 5a and § B.2 below. *nbṣ* (*nbṣlh*) and *s*[1]*hn* (*s*[1]*hnlh*) are not previously attested. The reading of the second name (KJB 44) is very doubtful. *ʾlf* and *s*[2]*km* are not attested in HIn as elements in compound names although both occur as simple names in Saf. (HIn: 69 and 354) and there is a doubtful reading of *ʾlf* in JS Tay 433. *bʿ* possibly

ḏs²r/ḏs²ry, ktby, lt and *lh,* who are invoked in the inscriptions[5], are all attested as theophoric elements in the names. By far the most common is *lh* which makes up approximately 22% of the examples[6]. The deity *ʾl* is not invoked in the inscriptions but, together with the abbreviated form *l*, makes up a further 26% of theophoric compounds. The theophoric elements *ʾs¹, gd, ʿzy, qm, mnt, yṯʿ* and *yġṯ* are not attested as divinities in the inscriptions, although they all occur elsewhere[7]. An abbreviated form *ʿ* of a deity's name most probably occurs in the names *tmʿ, grmʿ* and possibly in *mtn* [8]. The element in *ʾyl* in the name *ddʾyl* is difficult to explain.

Several of the names are what Milik has termed *basileophoric* compounds (Milik 1976: 145-146[9]) in which the divine names is replaced by that of a Nabataean monarch. Those attested are *ʿbdḥrṯt* (Nab. *ʿbdḥrtt*) 'servant of Aretas', *ʿbds¹qlt* 'servant of (the queen) *s²qylt*', *tmʿbdt* (and *tmʿbḏt*), *ʿbdʿbdt* (Nab. *tymʿbdt, ʿbdʿbdt*) 'servant of Obodas', *ʿbdmk* (Nab. *ʿbdmlkw*) 'servant of Malichos'[10].

There are a few names of which the second element is neither the name of a Nabataean monarch or clearly attested as a divinity. Milik (1959-19960: 150) lists some names in Nabataean[11] in which he suggests the second elements are tribal eponyms. This is the most likely explanation of the element *g* in the names *ʿbdlg* (KJC 205 and 647) and

---

occurs in the compound name *bʿlh* in Saf. WH 1571 (HIn: 112) but the reading is doubtful; *rʿm* might occur in *rʾmlt* in Saf. WH 1306 (HIn: 263) although the reading, as in the edition, of *bʾmrh* is more likely from the published copy. *zrʿ* is attested in Nabataean *zrʿlhy* (Milik and Starcky 1975: 129).

[5] See Appendix 4 for the occurrences of these deities and Ch.4.C for the types of prayers in which they occur.

[6] *ʾlh* occurs in the name *dnʾlh*.

[7] *ʾs¹* , Isis, Nab. Cantineau 1932: 65, Milik and Starcky 1975: 120-124; *gd,* 'Fortune', Cantineau 1932: 76, 170, and cf. Saf. Tribal Fortunes *gdʿwḏ* (Littmann 1943: 304, for instance), *gdḏf* (Winnett and Harding 1978: 564, for instance); *ʿzy* Nab. *s²ʿʾlqwm*, Cantineau 1932: 142, 150, 170 and Saf. *s²ʿhqm* (see Winnett and Harding 1978: 624, for instance); *mnt* cf. Nab. *mnwt* Cantineau: 1932: 116, 169; *yṯʿ* Saf. (see Winnett and Harding 1978: 624, for instance); *yġṯ* Faris 1952: 9.

[8] The fact that both *tm* and *grm* are common elements in theophoric names makes this interpretation of the first two names fairly likely. *mtnʿ* might be Form VIII, see § B.1 below, although it is quite likely the initial element is to be derived from Heb *mattān,* 'gift'. I am grateful to Mr. Michael Macdonald for pointing out the occurrence of the name *qdmʿ* in Saf. MSTJ 1 which is of a similar form. cf. Grimme 1926: 65; Ryckmans, G. 1934-1935, I: 25 Van den Branden 1954 and 1966: 108. Van den Branden suggests *ʿ* is an abbreviated form of the deity *ʿṯtr*.

[9] And see Milik 1958-1959: 354-355, 1959-1960: 148-150.

[10] For the spelling of the name in Hismaic, see Ch.3.A.5 and 7. Milik 1958-1959: 355 quotes TIJ 112A in this context which TIJ read *(z)n ʿbdmkt*. The text is Thamudic D and from a photograph and copy made in 1986, I would read the text *zn ʿbd mḥ* and interpret it as an unfinished live text of the form *zn* N¹ *mḥb* N² which occurs fairly frequently in the dialect, see JS 185, 204, 606, for example.

[11] *ʿbdmnnw, ʿbdʿdnwn, ʿbdʿmnw, ʿbdʿmrw*.

ʿbdg (TIJ 156) which occurs in a variant form *gy* as a tribal name in KJC 42, 647[12]. In Nabataean the name occurs as *gʾ*, *gyʾ* and *gʾyʾ* (Cantineau 1932:76, Negev 1963: 113) attested as a toponym twice in association with *Dušara* (Negev 1963: 113-117, Savignac and Starcky 1957: 198-199) and once with *al-Kutbā* and *al-ʿUzzā* (Strugnell 1959: 29-31). It is usually associated with modern *al-Jī* near Petra (Starcky 1966: 987).

An explanation of the other elements is less clear. *ʾḥwr* (Ar. the planet Jupiter)[13] and the alternative form *ḥwr*[14] (cf. Ar. 'the third star [ε,] that next the body, of the tail of Ursa Major') might be connected to the toponym *ḥwrwʾ* and *ḥwrwy* found in association with *Qaws* at *Ḫirbat Tannūr* in Central Jordan (Milik 1958: 237-238)[15] or with the town *Auara* (Αὔαρα) which Musil identified as *Ḥumaymah*[16].

ʾyb, ʿmn and *qn* are all attested in Nabataean compound names[17] and the last also occurs as an element in a name among Thamudic texts from the southeastern Saudi Arabia[18]. The elements *grb, gns², ḍn* and *ʿbs²* are previously unattested.

2. Non-theophoric compounds:

a. Names with prepositions:

Names introduced by the preposition *b* (Ar. *bi*) followed by a noun with the attached pronoun *-h* are fairly common in Safaitic (Littmann 1904: 126)[19]. Among the attested Hismaic texts there is only one ambiguous example, *bn ʿmh,* which, if it is to be explained in this way, would mean 'With or in his blessing' where the pronoun refers to a deity. Two other possible instances of this form are attested in *bs¹ʿdlh* and *bnṣrlh*, although there is only one ambiguous example in Safaitic where the deity's name rather than a pronoun occurs at the end[20].

b. Names with *ʾbn-, bn-, ʾb-, b-, ʾḫ-*:

After theophoric names the most common form of compound names are those prefixed with *bn* 'son of' and followed by an element which usually occurs separately as a name[21]. As Macdonald (in press: 15) has pointed out with reference to Safaitic, the name in the compound is never the same as the man's patronymic in cases where that is

---

[12] Where the author has both the compound name and the tribal name *w ʿbdlg ḏ ʾl gy*.

[13] And cf. the personal name *hʾḥwr* in Saf., HIn: 605.

[14] And possibly *ḥry*.

[15] Milik, however, derives the name from the root *ḥrw* 'brûler'.

[16] See Musil 1926: 59-61 n.20. *Auara* is said to have been founded by Obodas who chose the site as the result of a prophecy, in which his son Aretas was told to search for a place which was white. He is supposed to have seen a vision of a white rider and camel at the spot where the town was founded. Musil suggests a derivation of the name *Auara* from the root *ḥwr* with the meaning 'white'. I am grateful to Dr. E. A. Knauf for pointing out to me the possible connection between *Auara* and the element *ḥwr*.

[17] *ʿbdʾlʾyb* occurs in an unpublished Nabataean inscription from the *Ḥismā* which was discussed by Dr. W. Jobling at the Aram conference held in Oxford 1989.

[18] Ryckmans, J. n.d.: 11; Ryckmans, G (1934-35, I: 30) suggests *Qayn* is a lunar deity.

[19] See, for instance, *bʾmrh, bʾmlh* (HIn: 91), *bgrmh* (HIn: 93), *bḥrmh* (HIn: 95).

[20] HIn: 106 (C 5345) *bs¹mʾl*. The *b* in both the names quoted might be explained as *bū*, see below.

[21] *bnʾb* might be 'son of *ʾb*' or 'son of a father', cf. *ʾḫʾb* below.

given as well. *ʾbns¹ʿd* occurs in JS 682 and *ʾbnmn* in WAM T 25[22]. A feminine compound name *bthdt* probably occurs in AMJ 92.

Clear examples of compounds formed with *ʾb* 'father of' occur in *ʾbʾns¹, ʾbs¹lm, ʾbmlk* and probably in *ʾbnḥt* (see above)[23]. Names prefixed with *b*, where *b* is probably to be explained as *bū* as shortened form of *ʾabū* (Littmann 1904(b): 123-124, Winnett and Harding 1978: 19)[24], possibly occur in *bns²* and *bʿhn*[25], in *bḏʾb, bs¹ʿd* and *bmrt*[26] and in a certain reading in *bḥs²s²*. The last name also occurs in Nabataean in the form *bḥs²ws²w*[27] .

The name *ʾḫʾb* might be interpreted as 'Brother of *ʾb*' or as expressing a relationship 'Father's brother'[28].

B. One-word names.

1. The structure of one-word names:

It is possible to distinguish the following forms of simples names:

fʿl: This might represent either a nominal or verbal form. It is quite likely that many names of this form are diminutives disguised by the lack of vowelling[29].

fʿlt: The *-t* suffix in addition to representing a nominal ending most probably often indicates a diminutive (Wright I: 175C) or an intensive form (Wright I: 139-140) and in many cases a double diminutive which Littmann (1943: xxvii)[30] points out is popular among the names of the modern bedouin.

fʿln: The *-n* suffix probably represents an ending *-ān*[31] indicating either an infinitive, adjectival form, plural or in some animal names a specifically masculine form (Hess 1912: 6)[32]. In many instances, it is probably a diminutive or double diminutive (Littmann 1904(b): 127, 1943: xxvii, Hess 1912: 6).

ftʿl: Form VIII possibly occurs in the name *mtnʿ*, cf. § A.1.b above and perhaps in the name *bt̲t*.

---

[22] There are however no photographs of these texts. A further possible example with prosthetic *ʾalif* occurs in *ʾbnḥt* but I would prefer to explain this as *ʾb nḥt*. We cannot be certain that compounds with *ʾbn* do occur until we have unambiguous examples of which there are photographs.

[23] The name *ʾlʾb* might also be a compound with *ʾb*.

[24] See Littmann 1921: 7 for examples of names among the modern bedouin of compounds with *Bū, Būğārūra, Būḥṣāṣ, Būḥalāwe*, etc.

[25] The readings of both these names are doubtful.

[26] There are no photographs of any of these texts. It is important to emphasize this as the *n*, being a dot, can easily be missed in copying.

[27] Cantineau 1932: 70 suggests the name might be a mistake for *br ḥs²ws²w*.

[28] cf. *ʿmʾb*, for example, in Safaitic (HIn: 434) and *bnʾb* in the present corpus. See *Noldeke* 1904: 95.

[29] See Hismaic *ḏʾb* and cf. Nabataean *ḏʾbw* and the diminutive *ḏʾybw*; Hismaic *s²bt̲* and the Nab. diminutive *s²bytw*; Hismaic *klb* and Nab. *klbw* etc. and the diminutive *klybw*; Hismaic *khl* and the Nab. diminutive *khyl*; Hismaic *ns²g* and the Nab. *ns²g* and the diminutive *ns²yg*; Hismaic *wtr* and the Nab. *wtrw* and the diminutive *wtyrw*.

[30] He quotes the forms *fuʿaila*, *faʿʿūla* and the triple diminutive *fuʿʿaila*.

[31] And in some cases perhaps *-ūn* or *-īn* (Littmann 1904(b): 127).

[32] See, for instance, *t̲ʿlbn*, *ḏbʿn*, *ʿqrbn*.

ʾfʿl: Proper names frequently occur in the form *ʾfʿl* which, in the majority of cases, should be interpreted as the Arabic elative *ʾafʿal*, although there is evidence that it might on occasion represent a broken plural[33].
ʾfʿlt: There are four examples of this form where three radicals are shown *ʾs¹lmt*, *ʾʿbdt* and *ʾnḏrt, ʾnmyt*. The *-t* is probably a diminutive.
ʾfʿln: The form occurs in *ʾs¹lmn* and *ʾklbn* where the ending is probably a diminutive[34].
fʿly: The *y* in this form represents either a nominal ending of the *nisbah*[35] .
mfʿl: Names of this form might be a noun of time, place or instrument, the passive participle of Form I or a derived participle. *mḥwr* might be an example of a Form II or a Form III participle.
mfʿlt: The form occurs in *mḥllt, mrḫmt, ms²gʿt, mlgnt* where the *-t* might be a nominal ending or a diminutive.
hfʿl: A form defined with the particle *h* is only clearly attested in *hʿtl*, the other possible examples *hʾmy, hḫm, hkdn, hkn, hmrʾ, hhd* are all either doubtful readings or open to alternative interpretations.
tfʿl: The form occurs in the names *tḥbb, ts¹q, tṣr, tʿmr, tġṯ, tmd, tntn, thnʾ* where the *t-* prefix represents the feminine imperfect referring to a female deity[36]. This cannot be the case, on Semantic grounds, for *tḫnn* which is probably to be derived from Form V *tafaʿʿala*.
yfʿl: The masculine imperfect referring to a male deity occurs in the following names: *yḫld, ydʿ, yḏr, yzd, ys¹lm, yẓr, yʿly, yʿmr, yġṯ, yqm, ykbr*.

Quadriliteral roots:

A fairly high proportion of the names are formed from quadriliteral roots, a fact which is also true of the modern Bedouin names lister by Hess 1912 and Littmann 1921: *brqs², ṯʿlbn, gḥfl, gʿṯm, gmhr, ḥrgl, ḥmlg, ḥzrm, ḫṯʿm, dḥml, s²brmt, s²ḥdd, s²mrḫ, ʿqrb(n), ʿkbr, ġrṭm, frds¹* [37]*, qrs²m, qrṭm, qnfḏ, krtm*[38].

---

[33] See, for instance, *ʾas²ṣār* 'young gazelles'.
[34] Both these readings are doubtful but there are clear examples in Saf., *ʾblqn* (HIn: 15), *ʾdrmn*, *ʾdʿmn* (HIn: 32) etc. Littmann 1943: 296 suggests the vocalization of *ʾbrqn* as **ʾIbriqān* on the basis of a Greek transcription and *ʾṣbʿn* as a double diminutive **ʾUṣaibiʿān*.
[35] See above Ch.3.B.7. For examples of the *nisbah* being used as a personal name among the modern bedouin, see the examples in Hess 1912 and Littmann 1921 (*Ṣlūbī*, *ʿOnaizī* etc.).
[36] cf. the masculine equivalents: *yḥbb* (Saf. HIn: 660), *yʿmr* (HIn: 677 Saf. and Hismaic, see below), *yġṯ* (Hismaic and Saf. HIn: 678), *ymd* (Saf. HIn: 683), *yhnʾ* (Lihyn JS L 121). *ts¹q* is not previously attested in a theophoric context although cf. Cantineau 1932: 153 where he suggests an explanation of *s²qylt* as a compound of *sqy* + *lt*; there is a doubtful occurrence of *yṣrʾl* in Qat. (HIn: 673).
[37] This might be Persian (see § 3 below), although it is equally possible that it comes from the Ar. *furādis* 'a man with big bones'.
[38] There are several other names for which I can find no explanation that might also be quadriliteral forms: *brqs¹, ḥdmr, ḥzbr, ḥzrkn, ḏḥkl, ʿḫms², ʿrhz, ʿmhzn, qrfz, brqs¹* might be a compound of Aramaic *br* 'son' and *qs¹*.

2. Explanations of one-word names:

As in other Semitic languages, many of the one-word names occurring in Hismaic are most probably hypocoristic forms of theophoric compounds where the non-theophoric element is used by itself. The list of these elements (Appendix 5.a[39]) shows that, in almost every instance, elements that occur in compounds are also attested separately. In some cases they occur with either a *-t* or *-n* ending which in many instances are probably diminutive forms. The number of such hypocoristic names attested in the dialect is much larger than that indicated by the list which does not include imperfect and further *fʿl* forms which may reasonably by assumed to be shortened forms of theophoric compounds, although the full names are not yet attested[40].

In some cases, however, that the names are hypocoristica must remain an assumption as must the interpretation of almost all one-word names. The lack of vowelling and in many instances the lack of orthographic representation of weak radicals and unvocalised double radicals means that not only do we have no idea how the names were vocalized (Ryckmans, G. in CIS, Prt. V, Tomus 1: xiii, Macdonald, in press: 19)[41] but even the etymology must remain doubtful[42].

Further ambiguities are posed by the many meanings that can be ascribed to an Arabic root so that, even if one is certain of the root from which a name derives, it is still impossible, in many cases, to be certain of a general semantic implication[43]. The problem is, of course, that we have no context which allows us to be specific. We do not know the reasons a child was given a particular name and the best we can do it to be aware of the many possibilities.

Hess (1912), Littmann (1921) and Musil (1928: 243-244) show, among the modern Bedouin, how wide-ranging and varied these reasons might be and it is worth pointing them out. A child might be named because he shows the quality contained in the name or so that he might live up to it or be granted it[44]. Such names might refer to intelligence (cf. *ʾbṣr, ʾḏkw, ḏky*), courage (cf. *ʾḥls*[1]*, s*[2]*gʿ*), or moral qualities such as honesty (cf. *ʾṣlḥ*); trustworthiness (cf. *ʾmn*), piety (cf. *brr*[45]) and so on. Equally, physical qualities might be referred to, fatness (cf. *ʾs*[1]*mn*), largeness (cf. *ʾkbr*), baldness (*ʾglḥ*) etc.; particular characteristics of colouring (cf. *ʾs*[2]*hl* 'having a mixture of blueness in the black of the eye', *ʾʿfr* 'whitish dust colour' etc.); defects (cf. *s*[2]*ll* 'withered hand')[46] or

---

[39] And see § A.1.b above.

[40] For a full list of masculine and feminine imperfect forms in Hismaic see § B.1 and see HIn: 907-927 for the large number of elements that are attested in theophoric names in other dialects of both Early North Arabian and Early South Arabian.

[41] See the Index of names for possible vocalizations on the basis of later Ar. names from the roots *s*[1]*ʿd*, *s*[1]*lm*, *ʾbd, ʿmr,* for instance.

[42] For instance, *ḥs*[1]*n* might be from *ḥs*[1]*n* or *ḥs*[1]*s*[1]; *rb* from *rbb* or *ryb*; *s*[1]*r* from *s*[1]*rr*, *s*[1]*wr, s*[1]*yr,* or *s*[1]*ry*; *s*[2]*b* from *s*[2]*bb, s*[2]*wb, s*[2]*yb* or *s*[2]*by*; *s*[2]*k* from *s*[2]*kk, s*[2]*wk* or *s*[2]*ky* and so on.

[43] See, for instance, the meanings of the root *s*[2]*gr* 'be complicated, tie, thrust, divert, support, become numerous'.

[44] Hess 1912: 7.

[45] Filial piety (Littmann 1943: 296).

[46] See, for instance, Hess 1912: 32 *Šreim* 'Hasenscharte'.

peculiarities (cf. *qnf* 'smallness and flatness of ears') which might be described by referring to the unusual feature itself (cf. *ʾnf* 'nose', *ʾḏnt* 'small ear')[47]. A characteristic which might be ascribed to the infant by giving it the name of an object that has a resemblence[48] or one that is associated with a particular quality[49] (cf. *s¹hm* 'arrow') (Hess 1912: 6).

The names of animals are used in this way[50] and , as in Safaitic, (Littmann 1904(b): 128), there are many clear examples of such names in the inscriptions: *ʾs¹d* 'lion', *t̲ ʿlbn* 'male fox', *ḥrgl* 'locust', *ḏ ʾb* 'wolf', *r ʾl* 'young ostrich', *s²bt̲* 'camel-spider', *ḍb ʿn* 'male hyena', *ʿqrb* 'scorpion', *ʿqrbn* 'male scorpion', *ʿkbr* 'mouse', *qnfḏ* 'hedgehog', *wrl* 'monitor lizard', *w ʿl* 'ibex' to which might be added many more if examples open to other interpretations are included[51]. Several of the roots found as names are used as epithets for 'lion' in Arabic which might be the meaning behind them, for example, *ʾs²rs¹, s²ḥdd* (ill-natured) *al-ʾašras, šuḥdūd; ʿbs¹* (frown) *al-ʿābis; lt̲* (strength) *al-layt̲; nht* (roar) *al-nahāt*. The names of plants[52] (cf. *s²ḥ* 'artemesia'), the moon (cf. *s²hr* 'new moon') and clouds (cf. *mzn* 'clouds') are also given to children among the modern bedouin[53].

Hess (1912: 7) and Musil (1928: 243-244) give instances when children were given the name of the place where they were born. This might also apply to the type of place[54] (cf. *mqẓ* 'a place where the summer is spent'), the time of day or year (cf. *nhr* 'day-time', *rb ʿ* 'spring') in which the child was born or the type of weather[55] (cf. *mṭr* 'rain', *rs²* 'a little rain') (Hess 1912: 6-7).

Names with apparently unpropitious meanings might be used after a tragedy to ward off a recurrence of similar events[56] or, they might be applied as a description[57].

---

[47] cf. Hess 1912: 20 *Ḫšêm* 'Kleine Nase' 'Er [] hatte eine schiefe Nase'.
[48] Hess 1912: 21 *Debsān* 'So gennant weil er einen grossen Kopf hatte'.
[49] Hess 1912: 31 *Sêf* ' 'Schwert' damit er tapfer werde'.
[50] See, for instance, Hess 1912: 14 *Ǧreibī ʿ* 'er sei bei Geburt klein und rot gewesen', 28 *Sirḥān* ' 'Wolf', man hofft, dass das Kind wie ein Wolf wird': 42-43 *Ǧereigjib* ' 'Kleiner Rabe' wahrscheinlich, weil er schwarz war'.
[51] See, for instance, *ʾfl* 'young camel', *b ʿr* 'camel', *bkr* 'young male camel', *t̲ ʿlt* 'fox', *gḥs²* 'young ass', *grḏ* 'rat', *grs² ʿ* 'large camel or horse', *gml* 'male camel', *ḥglt* 'a patridge'.
[52] See, for instance, Hess 1912: 15 *Ǧä ʿeit̲en*; 16 *Ǧihǧāḥ*.
[53] See, for instance, Hess 1912: 11 *Bäder* 'Vollmond' (Littmann 1943: 302 says this is used less than 'new moon' because 'it decreases whereas the latter increases', 48 *Mizne* 'weil sie weisse was wie eine Wolke'.
[54] Littmann 1921: 19 *Munêhil* 'bei der *Tranke* geboren'; Hess 1912: 50 °*Mfeijid* 'Kleine *Wuste*'.
[55] Littmann 1921: 18 *Maṭar* 'Bei Regen geboren'; 16 *Ġuṭêyiṭ* 'bei Nebel geboren', Hess 1912: 23 °*Dhärān* 'Geboren in dem regenlosen Jahr'. One of the daughters of a bedouin family with whom I stayed in 1989 in northern Jordan was called *T̲aljah* as she had been born when it was snowing.
[56] See Littmann 1904: 124.
[57] cf. Hess 1912: 17 *al-Ǧuwa ʿ* 'Kleiner Hunger' weil er als kleines Kind einen dunnen Bauch, 'wie ein Windhund' hatte.

Equally, unpleasant qualities are used so that the child might appear in that light to his enemies[58]. Names relating to the emotions (whether good or bad) of the parents at the time of birth are used and those relating to the circumstances of birth or an incident that happened at the same time[59] (Hess 1912: 6).

The names *qs¹, qn, khl* and *yġṯ* might be divine names used as personal names[60].

Papponymy is not widely attested among the texts but there are a few examples[61]. There are also some instances where a son's name is derived from the same root as his father's[62].

3. Non-Semitic names:

hrkld (cf. Gk. Ἡρακλείδης) occurs in a text from near *Taymāʾ* (WAM T 60), *nqṭṣ* (cf. Gk. Νικήτιος, Nab. *nqtys¹* Cantineau 1932: 122, Milik 1976: 150[63]) perhaps occurs in KJC 28 and *wrqns¹* (TIJ 208) might be Ὑρκανός (Preisigke 1922: 451). *frds¹* (KJA 326, TIJ 376) is perhaps Persian[64].

C. Individual Authors and Genealogies:

1. Individual authors:

There are many names (or rather names with the same consonantal structure) written without a patronym which recur throughout the sites[65]. It is impossible from a single name to be certain that these inscriptions are written by the same author, although in some cases there are factors which make the probability higher[66] . The recurrence of these names, therefore only tell us one of two things, either that the roots or names were commonly used by people writing the inscriptions or that certain individuals wrote their names repeatedly. Similarly, because of the lack of vocalization (see §.B.2 above), when a name with the same patronym occurs in different texts we do not know that they are the same individuals although it is possible that they are[67].

---

[58] Littmann 1921: 19 *Nešwān* 'trunken (von Kampfestlust)'.

[59] See Musil 1928: 244: *Ragaʾ* 'The granting of Favor' as the child was a boy which the mother had wished for; *Zaʿal* because the mother was angry with her husband who had beaten her just before the birth; *ʿAsīr* 'Born in pain' because of a difficult birth; *Muġīẓ* 'Enraging' because the father had taken another wife at the time of birth; Hess 1912: 6 [e]*Mḥārib* 'zr Zeit des Krieges geboren'.

[60] See the Index of names.

[61] See *yḏr bn ʿbd bn yḏr* in the genealogy of KJA 36, *qn bn wrl bn qn* KJA 31 and *ḥbb bn bnlh bn ḥbb* in AMJ 46.

[62] cf. Hess 1912: 7 and see *ḏky bn ʾḏkw* KJC 179, 742: *ʾs¹lm bn ms¹lm* KJB 47, 158, KJC 522, *ʾʿbd bn ʿbdt* KJA 194, *ʿbdʾl(ʾ)[ḥ]wr bn mḥwr* KJC 202.

[63] For the translation of Greek *sigma* as *ṣād* in Safaitic, see King 1990: 8 .21.

[64] See under quadriliteral roots, § B.2, above.

[65] Apart from names which one would expect to be common such as *ʾn ʿm, tm* and *s¹ ʿd*, see (to take just a few examples) *ʾḥls* (4), *ʾrs²lh* (5), *ʾs¹mnt* (4), *ʾs²s²* (6), *ʾs²ṣr* (7), *ʾṣlḥ* (4), *ʾʿbdt* (7), *ʾfl* (6), *ʾmn* (8) in Index a.

[66] For example, similarities in script, see Ch.2.F; similarities in drawings, see Ch.6.A; certain features of the distribution of the texts, see Ch.7.

[67] And the limited area in which the texts were recorded makes it more probably, as does the occurrence, in a few cases, of the same name with the same patronym on the same

Where three generations or more occur, on the other hand, one can be more or less certain that the same names refer to the same individuals and if we include possible identifications where only a patronym has been written, 36 authors can be identified who have written their names more than once. On this basis, the number of individuals who have written at the sites can be calculated as 1239 as opposed to the number of inscriptions, 1337. A further reduction would almost certainly be justified but, for the reasons given above, it is impossible to determine with certainty by how much.

2. Genealogies:

In working out the relationships of certain authors one is again hampered by the lack of extended genealogies. The only relationship from among these texts that can be established on the basis of three generations is that of the brothers *ḥdmr* and *ḥzbr* and their uncle *hnʾ* (see genealogy 3 below). It is, however, worth pointing out possible relationships i.e. those based on only two generations[68]:

Genealogy 1[69]:

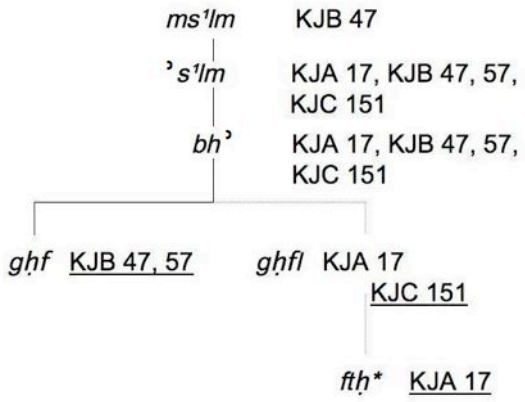

---

rock, see *ʾnʿm bn brd* on Rock L at Site B KJB 84, 87 and *ḏʾb bn s¹mʿn* and *ḏʾb bn s¹mʿn bn qn bn ms¹kt* on Rock LXXIII at Site B KJB 148, 156.

[68] Where a relationship is based on only two generations the name in the family tree is marked with an asterisk and the line is dotted.

[69] For an occurrence of *fṯḥ bn gḥfl*, see KJB 172 and of *gḥfl bn bhʾ*, KJC 50a. *ʿrs¹ bn ḥrs¹ bn ʾs¹lm bn ms¹lm* occurs in KJC 522 and *dʿm bn ṣḥb bn ʾs¹lm bn ms¹lm* in KJB 158 but a connection between the genealogy of *gḥf* and *gḥfl* and those of *ʿrs¹* and *dʿm* would be extremely tenuous as one might expect the names *ʾs¹lm* and *ms¹lm* to be popular and the combination as a name and patronym is likely to have been common.

Genealogy 2[70]:

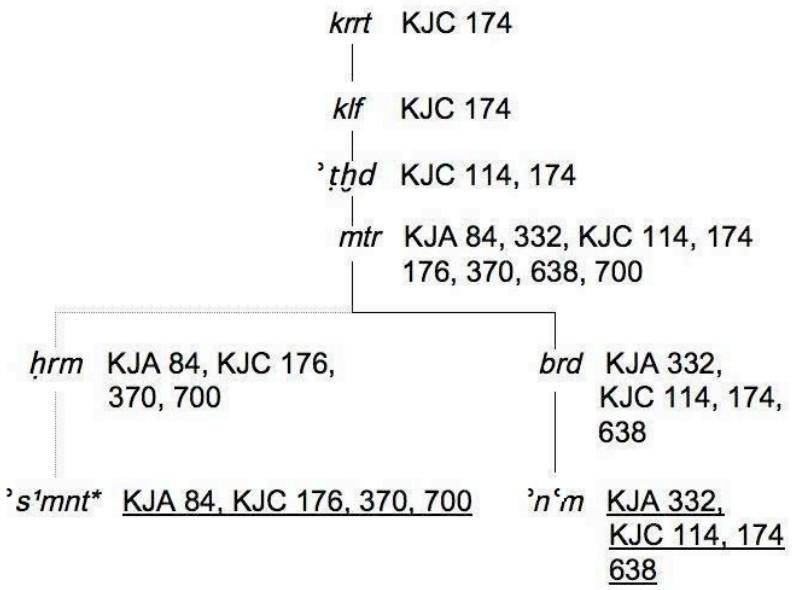

ʾs¹mnt's genealogy only goes back to *mtr* in the texts from *Wādī Judayyid* but back to *ʾṭḫd* in an unpublished text from elsewhere[71]

[70] The occurrence of KJC 174 and 176 on the same rock (LXXX at Site C) makes the relationship between *ʾs¹mnt* and *ḥrm* in these texts more likely. For occurrences of *ʾs¹mnt bn ḥrm* and *ʾnʿm bn brd*, see Index a. In several instances the names occur together on the same rock which makes it quite possible that these texts are also by *ʾs¹mnt* and *ʾnʿm* in genealogy 2. See Site A, LXXXV KJA 186, 190; Site C XVII KJC 21, 20, LI KJC 89, 114, CCLVIII KJC 370, 372.

[71] Among the corpus of inscriptions recorded by David Jacobson, see Ch.1.A.

Genealogy 3[72]:

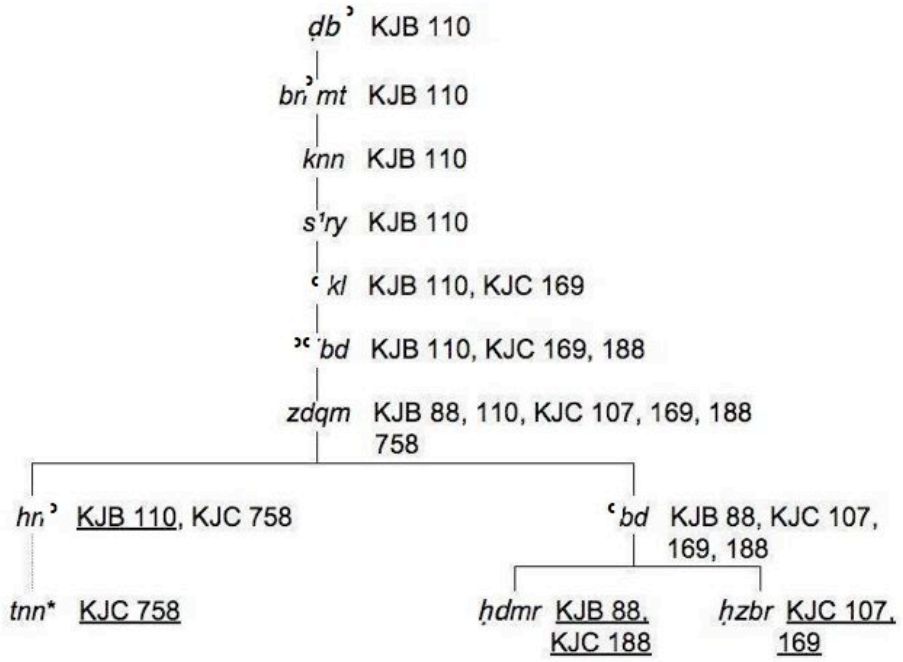

[72] For an occurrence of *tnn bn hnʾ*, see KJA 48, and see Index a for occurrences of *hnʾ bn zdqm*, *ḥzbr bn ʿbd* and *ʿbd bn zdqm*.

Genealogy 4[73]:

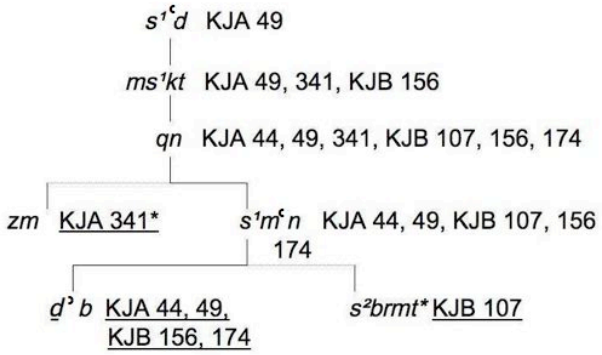

[73] See Index a for occurrences of *ḏʾb bn s¹mʿn*.

Genealogy 5[74]:

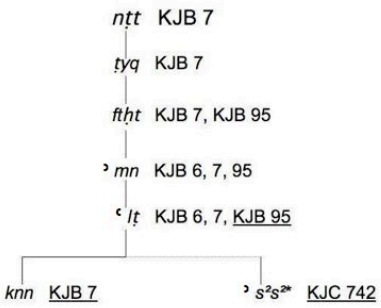

Genealogy 6:

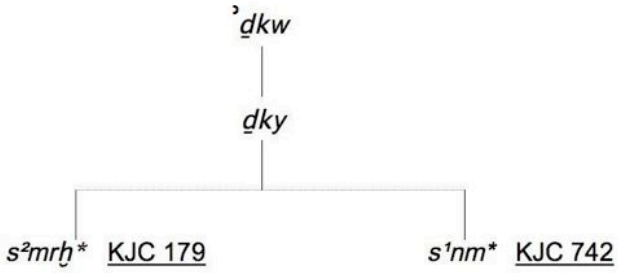

From the above genealogies is it clear that *ḥdmr* and *ḥzbr* are brothers (genealogy 3) and that some of the other authors are possibly brothers[75] and, in one instance, possibly

[74] The occurrence of KJB 6 and 7 on the same rock (VI at Site B) makes the relationship more likely. See Index a for occurrences of *knn bn ʿlṭ*, *ʾs²s² bn ʿlṭ* and *ʿlṭ bn ʾmn*. The occurrence of these names on the same rock (Site B XXI) in KJB 65, 64, 62 makes it more likely the texts are by relations. *knn* and *ʾs²s²* occur on the same rock (Site C LXXIII) in KJC 165 and 166.

cousins[76]. Evidence that more than one generation wrote their names comes from inscriptions by *ḥdmr* (KJB 88, 188) and *ḥzbr* (KJC 107, 169) and their uncle *hnʾ* (KJB 110) and there are other possible examples[77]. There is, however, no evidence that further generations have written at the *Wādī Judayyid* sites and therefore the genealogies give us no indication of the time span over which the inscriptions were written.

D. Tribal Names:

Names introduced by *ʾl* which I have translated as 'tribe'[78] are listed in Appendix 6. The forms of the names are similar to those found among the personal names (*fʿl, fʿlt, fʿln, ʾfʿl, fʿly*) and theophoric compounds occur as well (*ḫlʾl, mʿnʾl*).

From Hismaic texts found outside the *Ḥismā*, *mny* (MNM b 6) is attested as a tribal name of the author of a Safaitic text (C 4987 from *Zalaf* in Syria[79]) and *rbt* (MNM c 7) might be the equivalent of the name Ροβαθου found in a Greek inscription from *Rawwāfah*[80] , although an identification of either of these groups with each other is tenuous[81].

A text by a member of the *ṭyʾ* occurs for the first time in LAU 16 from the Jordanian *Ḥismā*. The tribe occurs in hostile contexts in Safaitic texts (C 2617, 2795, LP 236[82]) and in one text (C 5089) where it is the name of the owners of the camels which the author states he was pasturing[83].

As mentioned above (§ A.1.b), *gy* (KJC 42, 647) occurs as a toponym in Nabataean and in compound names and *mzn*, which occurs in two texts from the *Ḥismā* (AMJ 138, KJC 641) and in a text from the *Madāʾin Ṣaliḥ* area (Do XX 37, 3), might well be the same as the feminine form *mznytʾ* found in Nabataean JS 23 (CIS 216) in a tomb inscription from *Madāʾin Ṣāliḥ*.

---

[75] *gḥf* and *gḥfl* sons of *bhʾ* (genealogy 1), *ḏʾb* and *s²brmt* sons of *s¹mʿn* (genealogy 4), *knn* and *ʾs²s²* sons of *ʿlṭ* (genealogy 5), *s²mrh* and *s¹mn* sons of *ḏky* (genealogy 6).

[76] *ʾs¹mnt bn ḥrm* and *ʾnʿm bn brd* (genealogy 2).

[77] Texts by *ftḥ*'s possible father *gḥfl* (KJC 151) and possible uncle *gḥf* (KJC 151, KJB 47, 57) and a text by *knn*'s and *ʾs²s²*'s possible father *ʿlṭ* (KJB 95).

[78] See Ch.4.A.1.

[79] The reading of C 2634 is doubtful.

[80] See Seyrig 1957: 259-261.

[81] Given the distance between the provenance of these texts, the possibility that the consonantal structure reflects different names, and the possibility that an *ʾl* might be a fairly small social group. Milik: 1958-1959: 355 argues, quite rightly, that, by itself, the distance betweenb the provenance of MNM c 7 (near *Samākiyah* in the western Jordanian plateau) and that of *Rawwāfah* does not preclude the identification of the *rbt* with the Ροβαθου but he also points out that *rbt* might derive from *Rabbat*, the ancient capital of the region (about 12 km from *Samākiyah*), and refer to a local tribe. cf. Graf 1978:12.

[82] See Clark 1983: 152-154. The name, possibly that of a tribe, also occurs in CSNS 1004, 1011, 1046, JaS 10. See Milik 1972(b): 100. He reads *ṭy* in C 2446 but the reading and interpretation of the text is uncertain.

[83] Milik 1972(b): 100 reads *w bʿy h ʾbl ʾl ṭyʾ* but a restoration as *r* of the first letter of the verb is much more likely.

6. The Drawings:

The fieldwork at Sites A, B and C was a comprehensive survey of the epigraphic material and all the rock art was recorded regardless of its quality and whether it was clearly associated with the Hismaic inscriptions or not. On the whole, in the field, the drawings on a particular rock surface were given just one number, even when they were clearly of different periods or not part of the same composition[1]. A total of 576 drawings were numbered in this way of which 160 occur on the same surfaces as inscriptions. In this study, since it is primarily concerned with Hismaic, only the drawings on the same surfaces as the inscriptions have been included in the facsimiles and discussed in the text[2]. In the text, drawings on the same surface have been divided up and labeled (a), (b) and so on[3].

A. The Inscriptions associated with the drawings and the artists:

The formulae used by the authors to acknowledge drawings are discussed above in Ch.4.B.1-3. The inscription is usually written near the drawing, by the side, underneath or on top. Very often it is incorporated into a composition by being inscribed around[4] or inside a drawing[5], between the gaps created by it[6] or between the subjects of a composite drawing[7]. Similarly, where authors have inscribed a cartouche it often surrounds both the inscription and the drawing[8].

---

[1] There are a few exceptions to this, particularly at the beginning of Site A, where different subjects on the same rock surface were given separate numbers. See, Rock V, Adr 4 and 5, XIX Adr 20-22, XXV Adr 27-28 etc.

[2] All the clearly more recent and possibly older drawings on the rock surfaces have been included so that the inscriptions occur in the facsimiles in their actual context, but the drawings that are on the same rock but different surfaces have not been drawn up or discussed.

[3] The divisions have been made when, 1) it is clear the drawings are by different authors of Hismaic inscriptions and are clearly not intended to be part of a composite scene, 2) there are drawings of a whitish patina that are clearly more recent and, in one instance, Cdr 322c, where the drawings are clearly earlier than the Hismaic inscriptions, 3) the drawings occur on very large rock faces and are widely spaced. This has been done for ease of description and the divisions are not intended to suggest the drawings are necessarily of different periods.

[4] Adr 64/KJA 168, Cdr 140/KJC 219, Cdr 182/KJC 295, Cdr 237b/KJC 441, Cdr 246/KJC 444, for instance.

[5] Adr/KJA 38.

[6] Between the horns and body of an ibex, for instance, see Adr 45/KJA 110, Cdr 169/KJC 265. Most frequently the artist of a drawing writes his inscription running down between the legs of an animal, see Adr 4/KJA 16, Adr 21/KJA 69, Adr 22/KJA 76, Adr 47/KJA 113 etc. Sometimes only part of the inscription is inscribed in this position, see Adr 17/KJA 44, Bdr 19/KJB 59.

[7] Bdr 30/KJB 72, Bdr 55/KJB 12, Cdr 282/KJC 517, Cdr 288/KJC 558, for example.

[8] See Adr 50/KJA 132, Cdr 247/KJC 445, Cdr 318a/KJC 684. The cartouche surrounds the inscription KJB 70 but not the accompanying drawing Bdr 27.

There are several instances (Adr 87, Bdr 30, Cdr 46, 50, 58b, 254, 322) where, from the content of the accompanying inscriptions, it is clear that a scene was a joint composition in which the subjects were inscribed by more than one individual. There are probably several others but because of the ambiguity of the accompanying texts[9] we cannot be certain that the author was a co-artist, although sometimes the position of the text in relation to the drawing makes it more likely[10]. In Cdr 58b probably more than one person participated in inscribing the horse of the composition. When an artist has inscribed all the drawing himself he sometimes states the fact explicitly[11].

It is probably, in a few cases, that some individuals have inscribed more than one drawing within the sites[12]. Unfortunately, in most instances, the authors acknowledging the drawing do not give their patronyms or further generations and so we cannot be certain that they are the same man (see Ch.5.C.1) but there are other factors which suggest that it is most likely that they are[13].

---

[9] The phrase *l* N is used for both simple authorship and for the authorship of drawings (see Ch.4.A.1 and B.1) so we can only be certain that an author inscribed a drawing if he claims it explicitly or mentions the subject of the drawing in his text. The phrase *w* N *ḫṭṭ*, when it occurs by itself, is, on the whole, accompanied by a drawing and so is an almost certain indicator that the author was the artist. There are, however, two instances when it is used for simple authorship alone, see Ch.4.A.2. For ambiguous examples, see Adr 45 which might have been drawn by both *bn ʿtq* and *krt*, Bdr 52 perhaps by both *hnʾ* and *grmt* and Cdr 34 perhaps by both *whb* and *rks*[1].

[10] For instance, the position of KJB 147 between the camel's legs, the position of KJB 30b and KJC 518 between the subjects of the drawings. In cases where the drawings are clearly joint compositions, the position of other inscriptions suggests that other authors might have participated as well; see KJB 73 with Bdr 30, KJC 143 with Cdr 50, KJC 155a with Cdr 58b, for example.

[11] See Ch.4.B.1-2 and KJA 44, KJB 181 and KJC 30.

[12] For example, *ḏʾb bn s*[1]*m ʿn* KJZ 44/Adr 17, KJA 49/Adr 18 and KJC 756/Cdr 323; *s*[1]*lm bn ẓ ʿnt* KJC 295/Cdr 182, KJC 749/Cdr 322b; *ʿrs*[1] *bn ḥrs*[1] KJC 442a/Cdr 243a and (possibly) KJC 552/Cdr 283.

[13] The drawings by *ḏʾb bn s*[1]*m ʿn* are all of a high quality as are those by the author who names himself simply as *ḏʾb* (KJA 55, 290, KJB 72, KJC 157, 219, 441, 517, 756). Furthermore, his name is associated on rocks with *s*[1] *ʿd*, Site A, XVIII (KJA 49, 51); Site B XXXIII (KJB 72, 74) LXXIII (KJB 148, 145); Site C, LXII (KJC 157, 159 (on another face)), CLVIII (KJC 219, 220), CCCXLVIII (KJC 517, 521), in one instance, with both *s*[1] *ʿd* and *s*[1]*yr* Site C CCCXLVIIII (KJC 517, 518, 521) which suggests that the three of them were the same people, companions, who inscribed their names and drawings together. In Bdr 30 there is a man with his arms in the air on the side of the drawing and similarly in Cdr 58b. There is an inscription by *ḏʾb* next to both of these suggesting that the same man added these similar subjects to both compositions. Further features that possibly indicate that the same artists did different drawings, are, the similarity of the subjects of the two drawings by *bgt* (KJA 193, KJC 43) both of the drawings are lions; the proximity of drawings by *grf* (KJC 48, 51 on the same rock) and KJC 60 nearby, and, possibly *rfd* of KJC 156 and KJC 408 might be the same man, see Ch.2.E.2 n.66.

B. The Subjects of the Drawings[14]:

Camels are usually inscribed with the body completely infilled, although there are some examples in which the animal is drawn in outline[15] or in which the hump has not been filled in[16]. The animal is usually shown stationary but they are also depicted as walking or trotting[17]. A suckling camel occurs in Cdr 195 and examples of hobbled camels are attested[18]. The feet of one of the camels in Bdr 19 and one foot of the camel in Cdr 30a are depicted as circles left in relief. In Cdr 23 the feet are turned up and the cleft of the pads shown. In Bdr 56e, Cdr 12 and 15 the animals are being led or held by a man. There are several drawings of mounted camels. A rein is usually shown and often a stick for guiding the animal as well[19]. There are two clear examples of saddles (Bdr 56c and 56e[20]), where there are also T-shaped sticks attached being the hump[21]. One of the riders in Bdr 56c is depicted as riding on the rump of the animal with the rein apparently tied to the saddle. In Adr 126 and Cdr 154 the riders are shown slightly raised from the top of the humps with their legs in the air.

The horses all have rather heavy bodies and the tails are usually depicted as a single or double (Adr 47) line with hairs fanning out at the end[22]. In none of the drawings here has an attempt been made to show the mane. In Cdr 30a the horse has been drawn with cloven feet. Reins are shown and the riders are often armed with long thrusting spears or lances (Adr 47, Bdr 39, Cdr 254), short spears (Cdr 254) and swords (Cdr 58a, 254). In Adr 47 and Cdr 58b the bodies of the animals are decorated with lines. There is one drawing of a man leading a horse and rider (Cdr 30a).

The dogs in hunting scenes, generally drawn with a light body and long tails, are recognizable as seluqis. There are a few examples in which they are not so carefully depicted (Adr 37, 126, Bdr 19) and instances of animals which are most probably canines (Adr 6, 137), although it is difficult to identify them more specifically.

Ibex are the most frequent subject depicted from the wild fauna of the area. The bodies of the animals are usually completely infilled, although there are examples where

---

[14] There is an index of some of the subjects of the drawings after the edition.

[15] See Adr 3, 14, 103, Cdr 52e, Cdr 66.

[16] Adr 22a, Cdr 23, 75, 169.

[17] See Adr 19, 48, for example.

[18] See Adr 6, Bdr 19, 56d, Cdr 316, for example. Apparent hobbling of ibex is probably the result of misdirected hammering.

[19] It appears, in some cases, that there are two reins (see particularly the rear camel in Bdr 56c) but a modern camel's halter usually has just one (See Musil 1928: 356, Fig.45, for example) and in most of the drawings the second line is probably a guiding stick. Clear examples of such sticks occur in Cdr 23, Cdr 154, Cdr 301.

[20] In Adr 4 the saddle and rider is almost certainly a later addition.

[21] It is not clear what these sticks are. It is unlikely that they are swords as no handles are shown beyond the crossbar. For examples of much longer sticks in drawings accompanying Safaitic inscriptions, see the drawings accompanying C 4527 (Pl. XLIV Dussaud Macler 631) and C 2828 (Pl. LXVI Dunand 287) and C 2830 (Pl. LXVI Dunand 289)

[22] The type of tail shown is more suggestive of a mule but three of the inscriptions refer to the animal as *frs¹* (KJA 113, KJC 48, 470), Ar. *faras* 'horse'.

patches have been left in relief[23], presumably to indicate markings of colour. In several instances the animal is drawn in outline alone[24] or with the body not filled in[25] and there are a few examples where simple stick depictions of ibex are associated with the inscriptions[26]. Occasionally, a thick line is used for both the two fore legs and another for the two hind ones rather than each leg being represented separately[27]. Some of the animals are shown with an open jaw or possibly a beard[28]. When the feet of the animal are shown they are depicted as turned up or as cloven[29]. There are some examples where only one horn has been drawn[30] and in other cases the horns are depicted as exaggeratedly long[31]. In Cdr 83 the horns curve back to the body and ridges are shown along them. An unfinished ibex occurs in Cdr 52a and Cdr 266 and what is possibly a start at drawing the horns, on the same rock face as KJC 122. In Cdr 27 there is an animal with straight horns and a long tail which is most likely to be an oryx more commonly occurring among the drawings accompanying the Safaitic inscriptions found in the north[32].

There are eight drawings of felines, on the whole, they have long tails curled up at the end and three or more claws are depicted on the feet. The bodies of the animals tend to be heavy suggesting that they are most probably lions. In Cdr 182 the body has been left in relief with two lines inscribed across it. It is uncertain which type of animal is represented in Adr 50 where the body is filled with a lattice of squares and rectangles.

Ostriches occur in a few drawings. The wings are usually depicted and the birds are sometimes shown being chased by a seluqi. A single one-legged version of the bird perhaps occurs in Cdr 27 (cf. also Cdr 80) and the zig-zag line with two legs (Adr 37 and 349) are perhaps schematic representations[33].

There are several drawings of ibex hunt. The scenes show seluqis chasing, surrounding or grabbing hold of the animal. Archers are often depicted either shooting bows or holding a bow in one hand and a small throwing spear ?, sword, or short knife ? in the other[34]. The bows are usually double ones, shown either with or without a string,

---

[23] See Adr 45, Bdr 27, Cdr 213a, Cdr 322.
[24] See Adr 126, 135, 145, Bdr 18, Cdr 28, Cdr 169.
[25] See Adr 14, 64.
[26] See Cdr 247, 691, for example.
[27] See Cdr 155, 157, for example.
[28] In some cases it is difficult to tell which is intended but in Adr 126, Bdr 11 and 52 the line under the chin is probably a beard.
[29] For examples of the former, see Adr 87, Bdr 52, Cdr 246 and, for the latter, Bdr 81, 10 (the hind feet) and Cdr 442a.
[30] See Bdr 50, Cdr 155, for example.
[31] See Adr 32, 52a, Cdr 52f (one very long horn), 169, 209, for example.
[32] A stick animal of whitish patina with straight horns which might be an oryx occurs in Cdr 161. For examples of oryx in Safaitic, see WH 763, 3502-3503, and, for the identification of the animal as an oryx, rather than a dorcas gazelle, as suggested by Winnett and Harding (1978: 24), see Macdonald 1979: 140.
[33] A similar shape occurs above one of the ibex in Bdr 18 where this interpretation is less likely.
[34] For examples, see Bdr 30, 52 and Cdr 322.

but there are a few instances in which they appear to be single[35]. Often arrows are shown either in flight or embedded in the body of the animal. In two drawings (Cdr 154, 155) camel riders are clearly associated with ostrich hunts and in one there is horseman (Cdr 159)[36]. Archers are depicted in Adr 48 and Cdr 80 shooting at lions and in Cdr 80 and probably Cdr 318, a long thrusting spear is being used to kill the animal. In Cdr 182 there is a drawing of a man, which is probably a later addition to the composition, standing to one side and holding what looks like a long whip.

Scenes of combat show archers on foot (Cdr 34, 282, 288) and men armed with swords (Cdr 254, 282) and carrying small shields (Cdr 282, 288). In Cdr 254 there is a battle scene between three horsemen. One of them is dismounted, using a long thrusting spear and holding a shield which is larger than those depicted elsewhere. His opponent is depicted carrying a small throwing spear.

The men depicted as riders and in hunting scenes are usually inscribed with care, although they are done in a very simple style and do not reveal much about their clothing. In depictions of riders holding reins (or a rein and stick) and those of archers shooting bows, an arm is clearly shown drawn back and bent at the elbow. The bodies of the horsemen in Adr 47, Cdr 58a, 159 ? and two of the in Cdr 254 are not filled in. In Adr 47 the body is shown with lattice decoration and in Cdr 254 one of the horsemen might be wearing head gear. Apart from the men shown in composite scenes, there are several examples of stick men with their arms up in the air or held out to the side[37]. The men in Cdr 322c were clearly drawn prior to the inscriptions on the rock surface and the men in Cdr 52c is probably not associated with the texts.

There is a sign composed of a line with two arms that I am unable to identify. It occurs in association with Bdr 30, Cdr 30b, 140 and 213 and to the left of KJC 413 on the same rock[38]. It is not in similar positions with respect to the drawings but it is usually associated with drawings of ibex and might be a depiction of something relevant to a hunt. There are a few examples of loops, divided loops and miscellaneous shapes[39] and in Bdr 5 there is possibly a depiction of a pair of feet joined together[40].

The drawings of a whitish patina show similar subjects, camels, camel riders, horses, horsemen, ibex, dogs, ostriches, and men with their arms outstretched. A combat scene is depicted in Bdr 18b where the men are armed with long spears and shields. A man firing a gun occurs in Adr 14. Later 'inscribers' have 'touched up', by re-hammering, or added details to several of the earlier drawings[41] and in a few cases (KJC 132, 404, 431) they have turned letters of Hismaic inscriptions into animals.

---

[35] See Bdr 18, 22, 52, for example.

[36] In Cdr 243b there is a camel rider and horseman but these are not obviously associated with the ostrich being chased by a seluqi.

[37] See Adr 126, 137 ?, 145, Cdr 28 etc.

[38] A similar sign with a tail occurs near Cdr 322a.

[39] Adr 5, Adr 9, Adr 158, Cdr 40a, Cdr 266.

[40] See Jobling 1983(b): Pl. XLIII, 2 for a clear depiction of feet at a site further south in the *Ḥismā*.

[41] Adr 4, Bdr 46 (the head only), Cdr 15, 23, 32, 254 (where penises have been added to the horses). The dogs in Bdr 18 have been added as chasing the older ibex.

7. Distribution:[1]

The texts and drawings from these sites are inscribed on boulders which range in size from several metres in height and width to small embedded and loose boulders[2]. The inscribers have not necessarily chosen the smoothest or most suitable rock on which to write, although the greatest number of inscriptions tend to be in areas where the black patina remains intact and the surfaces are not worn or pitted. Both single inscriptions and groups of two or more are found on rock faces and, in some cases, more than one surface of a rock has been inscribed[3]. There are no clear instances where an inscription has been inscribed over another and, even on crowded surfaces, the texts are carefully written between each other.

The plans show a similar distribution for both rocks inscribed with inscriptions and drawings and rocks inscribed with drawings alone[4]. At Sites A and C there are clear groupings of inscribed rocks along the edges of the deeper watercourses[5]. At Site B except for the areas shown in the insets the inscribed material is, on the whole, more widely scattered. At Site C there is a group of inscribed rocks at the eastern end and along the southern edge (Insets C 2b, C 6a) and towards the west (Inset C 5a) and no large concentrations of epigraphic material in the middle of the rock field, although there are isolated instances of inscribed rocks right across. The thinning out of the density of inscribed rocks at the western edge of Site B and the central western section of Site C is, to a certain extent, because the rock field gives way to sandy areas with weathered rocks and a lower density of them. At Site C the density of rocks increases again on the very western edges as a result of tumble from the slopes from *Jabal Mī ʿzān*.

There are a few structures within the sites[6]. None of the inscriptions refer to them and it is uncertain whether the inscribed rocks associated with the cairn (Inset C 5a), and

---

[1] See Figs. 69-89, for plans of the epigraphic material found at Sites A, B and C.

[2] There is very little epigraphic material inscribed on small movable boulders, see Site B Rock LIX, Site C CCXXX, CCCLXXVII, CCCXCI and CDXXXVIII-CDXLIX.

[3] See Site A Rock IV, IX, XIX etc.

[4] Until an analysis is done of the drawings which occur on surfaces without inscriptions, this does not tell us very much, but from the occurrence of clearly more recent drawings (and in the one clear instance where the drawings are older Site C, Rock d) we know that people who are not contemporary with each other, to a certain extent, used the same rock faces and inscribed in the same areas.

[5] At Site C along the southern bank of the watercourse at the north of the site. The northern bank in the upper reaches is on the whole step with little flat ground. There are also several series of inscribed rocks along the watercourses in the middle of the rock field, see, for instance, those on Plan C2 and C4 CCLXXXIV, CCLXXXVIII, CCLXXVIII, CCLXXX, CCLXXXI etc. and C4 CCLXXXII, CCCXIX, CCXXIV, CCCXXX etc.

[6] At Site A there are six areas, probably old campsites, of circular and semi-circular low walling in some of which there was evidence of recent hearths. At Site B there is a low circular wall encompassing Rock XII and a series of connecting walls to the west of Rock LXXIX (Plan B 2). At Site C there area number of cairns, broad based mounds of stones,

those with the probably graves (Inset C 5b) are contemporary with them or have been re-used[7].

There are a few instances where possibly the same individual has written his name more than once on a rock face or on rocks close to each other[8], in some cases, making the numbers of inscriptions on a rock greatly disproportionate to the number of individual authors involved[9]. Equally, there are authors who have written their names in diverse areas of a particular site[10], and some who have written in two of the sites or in all three[11].

---

in the northwest, west and southwest areas of the site (Plan C 5 and C 6). At the Inset C 5b there are groups of small rocks and boulders probably covering graves.

[7] Since so few of the inscriptions written elsewhere at the sites occur on small loose boulders, it is quite likely that at least the group from Inset C 5b were specifically written on small stones in order to be placed on the structures.

[8] For problems in identifying individual authors, see Ch.5C.1. If one uses the probable identifications where a name and patronym are given, there are clear examples of authors who have written their names more than once on a rock. At Site B on Rock L *ʾnʿm bn brd* occurs in KJB 78, 84, 87; on LXXIII *ḏʾb bn s¹mʿn* occurs in KJB 148, 156; on CI *hnʾ bn zdqm* occurs in KJB 173, 177 and at Site C on Rock LI *ḥzbr bn ʿbd* occurs in KJC 97 and 107.

[9] See, for example, Site C Rock CCCVI where *ġnmt* occurs five times and *bnʾb* eight times. Where a single name is repeated less often, then whether the author is the same in each case must remain uncertain, but the fact that there are a number of rocks on which a name is written more than once suggests it is likely that, in some of these cases, the repeated names belong to the same individuals. See, for example, Site A on Rock V *nṣlt* in KJA 22, 29a; on XVIII *grf bn mhṣ* in KJA 46 and *grf* in KJA 50; on XCIII *ʿlṭ* in KJA 223, 263, 271 and so on; at Site B on VI *ʾs²s² bn ʿlṭ bn ʾmn* in KJB 6 and *ʾs²s²* in KJB 8 and so on; at Site C on LI *ʾs¹mnt bn ḥrm* in KJC 89 and *ʾs¹mnt* in KJC 101, *ḥzbr* in KJC 90 and *ḥzbr bn ʿbd* in KJC 97 and 107, *ṣhbt* in KJC 99 and *ṣhbt bn mgʾ* in KJC 105; *grf* in KJC 95 and 103; *fḍg bn nġl* in KJC 92 and *fḍg* in KJC 105; *qrs¹* in KJC 116 and 117; *mbʿl* in KJC 120 and 121a (both these last inscriptions are love texts which also suggests they are by the same person); on CCCIV *rʾl* in KJC 449 and 455; *fṣyt* in KJC 450 and 454.

[10] See, for example, *ʾṣlh bn ngʾ bn qnt* KJC 391, 452; *ʾnʿm bn brd bn mtr* KJC 114, 174, 638; *ʾsmnt bn ḥrm bn mtr* KJC 114, 174, 638; *ʾs¹mnt bn ḥrm bn mtr* KJC 176, 370, 700; *ḥzbr bn ʿbd bn zdqm* KJC 107, 169; from texts in which the authors are possibly the same individuals see, *brr bn ʾs¹mnt* in KJC 128, 257, 668; *drs¹ bn ḏḥk* KJC 264, 458; *ʿrs¹ bn ḥrs¹* KJC 207, 261, 337, 516, 615.

[11] See, for instance, *ġrṭm bn nht bn ʾġnt* KJA 83, 270, KJC 75; *ʿrs¹ bn ḥrs¹ bn ʾs¹lm* KJA 112, KJC 442a, 522; from texts in which the authors are possibly the same individuals see, for example, *ʾs²s² bn ʿlṭ* KJB 6, 64, KJC 190, 748; *ʾs²s²r bn zdqm* KJA 53, KJB 155, KJC 287; *ʾmn bn s¹dn* KJA 198, KJC 126; *tm bn bnlh* KJB 66, 169, KJC 211; *ḫgg bn bglt* KJB 77 and KJC 5; *s¹lm bn ẓʿnt* KJA 88, KJC 295, 749.

The numbers of inscriptions that occur on a particular rock (either on one face or several) or in a small area of boulders can be quite large[12] and if a somewhat arbitrary division of groups is made on the basis of those shown in the insets of the plans and rocks (not in the insets) which have twenty or more inscriptions quite a large proportion of the total number of texts can be accounted for within these concentrations alone[13].

Since the texts are graffiti and inscribed, on the whole, with no practical purpose, the choice of an area within these sites in which a text was written was, almost certainly, largely a question of chance whereby a would-be inscriber, with sufficient time, found himself in a convenient or suitable place. The possible reasons for relatively large groups of inscriptions on a single rock face and in small areas are many and varied. One factor which probably accounts for a certain number of the texts found in these concentrations is the 'attraction of graffiti', whereby additions are made to existing groups, because an individual is motivated by the presence of graffiti to make his won contribution on the same surface or nearby, whether or not he understands the content of the existing graffiti or knows the authors[14].

More interesting, however, are clear indications that the texts on a single rock face[15] are contemporary and that the authors at least knew each other. Firstly, there are instances where the names of relations and possible relations occur on the same rock faces[16] and, secondly, repeated combinations of the same names on different rock faces suggest that groups of companions inscribed their names together[17]. We cannot tell with

---

[12] See, for instance, at Site A where there are 45 on the east face of Rock XIX (and 2 on the South southeast face) and 60 on the east face of XCIII (18 on the south face and 1 on the north); at Site C there are 40 on the north face of LI.

[13] At Site A the figure is 65%, at Site B 31% and at Site C 42%.

[14] The phenomenon of the 'attraction of graffiti' can be seen in the occurrences of clusters of graffiti in modern cities, for example, and also to a certain extent among the clearly more recent drawings of whitish patina at sites such as these, where they are often inscribed on the same surfaces as older material even when others are available.

[15] Or on rocks near to each other.

[16] See, for instance, Site B on Rock VI, texts by *ʾs²s² bn ʿlṭ*, KJB 6, and *knn bn ʿlṭ*, KJB 7; on Rock XXI *ʿlṭ bn ʾmn*, KJB 62, and *ʾs²s² bn ʿlṭ*, KJB 64, and *knn bn ʿlṭ* KJB 65; at Site C LXXX *ḥzbr bn ʿbd*, KJC 169, and his brother *ḥdmr bn ʿbd*, KJC 188 and the possible cousins (see Ch.5.C.2 genealogy 2) *ʾs¹mnt bn ḥrm* KJC 176 and *ʾn ʿm bn brd* KJC 174; on CCI *ʾḫʾb* KJC 28; on CDXV *ʾfl* KJC 646 (and most probably his father, see KJC 205) *ʿbdlg* KJC 647.

[17] Most of the repeated combinations of names occur with other inscriptions on the same face. The examples are not very many and it is on the whole difficult to find repeated combinations of more than two people. See, for example, the names *ʾnf*, *rks¹*, *ġrṭm*, *fḫtn*, *qymt* and *mġny* at Site A on Rock XIX (the east face) and at Site B on Rock LXVIII where the combination recurs except for the name *fḫtn* although perhaps *fḫn*, KJB 118, should be restored as the name see the commentary. *mb ʿl*, *ġrṭm* and *ʿlṭ* at Site A on Rock XCIII and at Site C on Rock XLV *ʿrhz* and *ḥzbr* and the possible cousins *ʾs¹mnt bn ḥrm* and *ʾn ʿm bn brd* at Site C on Rocks XVII and LXXX; *ḥzbr* and *ṣhbt* which occur together at Site C on Rock LI, LXXX and XCIII; *bn ʾb*, *ġnmt*, *ms¹ ʿd* and *hd* which occur together

certainty to what extent this was done at the same time as a 'group activity' as there is always the possibility that someone added his name later to one or a group of texts which he recognized as being by people he knew. Nevertheless, the recurrence of combinations of names and in some cases the similarity of the content among the texts which occur on a single rock[18] makes it more likely that some of them at least were inscribed at the same time by a group[19].

The distribution of texts written by the same individuals and possibly the same individuals at different parts of a single site and the occurrence at more than one of the sites is indicative of a local population, which remained in the bays of Sites A and B and the wadi and rock field of Site C, over a certain period or made repeated visits to them. It is clear from the content of three texts (KJC 138, 139 and 140) that the wadi at Site C was used, at least on one occasion for hunting or after a hunting expedition, but we cannot say more than that. We do not know, for example, whether hunting was the only use that the writers of the texts made of the bays and wadi or whether they were also involved in pastoral activities at these sites[20]. Whilst, therefore, it is obvious that large numbers occur in areas frequented by people because they were in some way advantageous, it is largely a matter of conjecture as to which factors would have made one particular area more attractive than another[21].

---

at Site C on Rocks CCCVI and CCCLV; *lḫṯ bn ʾs¹lm* and *mty bn rfʾy* which occur together at Site C on Rocks CCXVIII and d.

[18] For example, the love texts on Rock V at Site A, the prayers to *ḏs²ry* on Rock L at Site B and the hunting texts on Rock LV at Site C.

[19] It has already been pointed out that several of the drawings are probably joint compositions done by two or more individuals, see Ch.6.A. That one inscription was sometimes done for a group of people is shown by the use of the first person plural suffix pronoun *-n* 'our' in some of the prayers using *ḏkrt*, see Ch.4.C.1.

[20] That the authors of the texts were pre-occupied with ibex and hunting is clear from the large number of drawings of those subjects but the rock art cannot be assumed to necessarily reflect the actual occupation of the inscriber at the time. Probably, the sites were used for both activities, although obviously not at the same time. If the texts were written during hunting expeditions, then, presumably, it would be been after the completion of the hunt as the noise made by hammering an inscription would have frightened the animals away.

[21] At these sites there are, on the whole, very few groups of inscribed rocks in areas of deep tumble for boulders and there seems to have been a preference for areas in which, although some of the boulders are close together, there is a certain amount of ground between them. If the sites were used for grazing animals, the distribution along the watercourses at Sites A and C could be because, after heavy rains, pools collected which would have provided an important source of water and therefore an area where people tended to congregate. Equally, the slightly higher and relatively flat ground along the banks of the watercourses would have been agreeable places to site during summer and suitable areas to camp in winter where they would have been above potential flood water. Rock LV at Site C is sufficiently large and tall to provide shelter and shade and has an area of flat ground to the east of it. Perhaps Rock XXXI at Site C was chosen for the prayer KJC 46 because it is a prominent boulder standing about 2 metres high.

Among the texts from these sites there are names together with patronyms that occur in the corpus published by Harding and Littmann (1952) and from the preliminary reports published by Jobling as well as among unpublished collections of texts[22]. Whilst it is uncertain, in most cases, as to whether these names are texts written by the same individuals because of the lack of extended genealogies, they are a possible indication that, as one might expect, some of the authors of the texts from Site A, B and C made use of other wadis running down from the escarpment and were present in *Wādī Ramm* to the south.

[22] See the list at the end of Index a. The former texts come from the *Wādī Ramm* area which is approximately 37 kilometres south and the latter from *Wādī Ḥafīr* the mouth of which is approximately 24 kilometres south, along the escarpment, from where it stretches for approximately 15 kilometres northeast. There are name with similar genealogies among the collection of texts recorded by David Jacobson at *al-Shallūl* (approximately 2 kilometres south of Site C) as well as at other bays and wadis visited during the initial survey in 1986.

8. Hismaic, Nabataean and the dating of the texts:

A. Hismaic and Nabataean, the writers of Hismaic and the Nabataeans:

There are certain features of Nabataean phonology[1], expression[2] and orthography[3] that are occasionally attested in Hismaic. The Nabataean graffito accompanying KJC 380 shows that the writer of the Hismaic text was not only conversant with the Nabataean script but, given that he has written a *w* ending to his name in the Nabataean version, was also aware of orthographic differences between the two languages[4].

The deities *Allāt*, *Dušara* and *Kutbā* occur in the pantheons of both Hismaic and Nabataean and, in both, *Allāt* is asked to remember individuals[5].

Many of the theophoric and other elements are attested in compound names in both types of inscription[6]. The occurrence of the definite article *ʾl* (and with Hismaic orthography *l*) in some of them (*tmlḥwr*, *ʿbdʾlʾḥwr*, *ʿbdʾlyb*, *ʿbdlg*) shows that these particular names most probably entered Hismaic onomastica *via* Nabataean[7].

The examples of writers of Hismaic with Nabataean *basileophoric* names is evidence that some of the authors of Hismaic held Nabataean royalty in respect and possibly the occurrence of *ʾl mzn* ('the tribe of *mzn*')[8] and of *ʾl gy* ('the tribe *gy*') suggests

---

[1] See Ch.3.A.2, 5, 6 and 7.

[2] The use of *mn ʾl*, see Ch.4.A.1.

[3] For names with a final *w*, see Ch.3.B.7 and for instances in which prosthetic *ʾalif* is written, see Ch.3.B.8.

[4] Although of course it is possible that someone else wrote the Nabataean text. Evidence that some writers of Hismaic were familiar with Greek is suggested by the Greek graffiti on the same rock as Hismaic MNM c 7, see Milik 1958-1959: 357-358. Milik's suggestion (1976: 145 n.5) that *ʿbdʿmn* in TIJ 56a (not 57a) might be written by an artisan who wrote Greek and Nabataean texts at *Ramm* temple and a Nabataean text at *ʿAyn Šallālah* is possible but cannot be proved. The Nabataean graffito with KJC 380 suggests that some writers of Hismaic were acquainted with Nabataean and, if the identification of *ʿbdʿmn* as the same man is correct, it would suggest that some people were proficient at writing Nabataean and also occasionally wrote Hismaic. The occasional features of Nabataean orthography in Hismaic mentioned above might also be an indication of this.

[5] The deities *Allāt* and *Dušara* both occur in Safaitic but *Kutbā* is not attested. Invocations in Safaitic asking for the remembrance of people are extremely rare, see Ch.4.C.1.

[6] See the list of elements in Appendix 5.b and the comparative examples in the Index of names.

[7] By itself, the occurrence of the article *l* is not evidence of a Nabataean origin as there are Thamudic texts from Southeast Saudi Arabia which employ this form of the article in some of the names, see Ryckmans 1956: 11. It is, however, the most likely explanation given the provenance of these texts and the orthography of the article in some cases with prosthetic *ʾalif*. The element *g* is a clear indication of a Nabataean origin, see Ch.5.A.1.b.

[8] See Ch.5.D.

that in some cases the relationship between the writers of Hismaic and Nabataean might have been tribal or familial[9].

B. The Dating of the texts:

Whilst § A above lists connections between the writers of Hismaic and the Nabataeans and it is clear that to a certain extent they were contemporary, there is still no evidence for the length of the period over which the texts were written[10] and there are no texts that can be dated precisely[11].

---

[9] *gy* is not attested in Nabataean as a tribal name but it is most likely that the connotation of the element in the Nabataean compound names *ʿbdʾlgʾ*, *ʿbdʾl[g]w*, *ʿbdʾlgyʾ* is the same as that of the element in the Hismaic compounds, see Ch.5.A.1.b and D.

[10] The genealogies from the *Wādī Judayyid* sites do not give any evidence of the time span over which the texts were inscribed, see Ch.5.C.2.

[11] The repetition of the names used by Nabataean kings means that the *Basileophoric* compounds do not enable us to place the texts with these names in a particular reign, although Milik (1959-60: 150) suggests the use of these names provides an approximate *terminus ad quem* for these texts which he places between the 2nd and 3rd centuries A.D. If the elements *ʾḥwr/ḥwr* in some compound names are connected with the town of *Ḥumaymah - Auara* then the use of these names could be roughly dated to after the founding of the town i.e. some time during the reign of Obodas I (c.93-85 B.C.) The tomb at *Madāʾin Ṣāliḥ* (Jaussen and Savignac tomb no. C 1) with JS Nab. 23 which contains the name *mznytʾ* can be dated to between 35-50 A.D. (I am grateful to Dr. Judith Mackenzie for supplying this information, see Mackenzie 1990: 23) although, even if it was certain that this name refers to the same social group as *mzn*, we still do not know to what extent they are contemporary.

Winnett 1937: 53 suggested a possible date for Hismaic texts of up until 4th or 5th century A.D. on the basis of SSA 8-13 which surround a Nabataean text, see Savignac 1934: 578 no. 24. The Hismaic texts could of course have been written at the same time or only little later than the Nabataean ones. From the bilingual Nabataean/Hismaic texts (JS Nab. 17 and JS 1) dated to 267 A.D. we know that Hismaic was being written up until the second half of 3rd century A.D. The latest securely dated Safaitic text, ISP 21 bis, can be placed in 261/2 or 266/7 A.D.

9. The Edition of the Texts from Wadi Judayyid Sites A, B, and C

Site A

II Northwest

1 *l qnt bn qn*

By *qnt* son of *qn*

To the right of *qn* is a *b* which is either the start of another inscription or an attempt to continue KJA 1.

IV Horizontal surface

2 *ny[k] –(g)b rqb---ʾ*

-(g)b had sex with *rqb---ʾ*

The text has been heavily scored over and filled in and the reading is doubtful. For texts using *nyk*, see, Ch.4.E.2. *rqb* is not in HIn.

Southwest

3 *l gbḫ˚*

By *gbḫ˚*

The *b* is not very curved. The last letter has a tail which is slightly shallower than the rest of the letter. *gbḫ* is not in HIn.

Adr 3 A group of camels drawn in outline. The camels are inscribed using a single line for one hind leg, the hump, neck, head and one front leg. The other two legs and belly are drawn as three sides of a rectangle. The 'inner' legs are joined to the body and hump in two of the drawings. All the camels, except the largest one, have a single line curving up for tails. Searight (Macdonald and Searight 1983:575) makes the observation that female camels are depicted with their tails curled up in Safaitic drawings. This is sometimes the case among the drawings here, see, for example, KJC 39/Cdr 23 and KJC 48/Cdr 30a but not always, see KJA 69/Adr 21. The largest camel also has hairs clearly depicted along its hump cf. Adr. 14. In the bottom left hand

corner is a more recent drawing of a camel of whitish patina with a rein running from the head to the hump.

V Practically horizontal surface, the distance between some of the inscriptions on this rock is not drawn to scale. See Pl. IIIa for KJA 17 prt., 20-29b.

4 *l mks¹*
By *mks¹*
On the top hand corner of the rock. *mks¹* is not in HIn.

5 *l ʿḏnt*
By *ʿḏnt*
To the left of KJA 4. One of the forks of the *ʿ* is faint.

6 *nk rhs¹ ʿzz w nyk*
rhs¹ had sex with *ʿzz* (or a loved one) and made love repeatedly
For texts using *nk* and *nyk*, see Ch. 4.E.2. *ʿzz* might be a proper name or a Substantive cf. Ar. *ʿaziz* 'dear, beloved'.

7 *l zḥn bn frs¹*
By *zḥn* son of *frs¹*
To the right of KJA 4. *zḥn* is not in HIn.

8 *nk rhs¹n bnʾ (l)* (or *bn ʾ(l)*)
rhs¹n had sex with *bnʾ(l)* or *rhs¹n* son of *ʾ(l)* had sex
Below the end of KJA 7. Most of the *r* is covered by hammering, one of the prongs of the *ʾ* is faint and part of the *l* is covered by an abrasion. *rhs¹n* is not in HIn. *rhs¹* occurs in KJA 6 on this rock. For *nk,* see Ch. 4.E.2. The text is ambiguous as either *bnʾ l* is the object of *rhs¹n*'s passion or the letters should be read as *bn ʾl*, 'son of *ʾl*'.

9 *l ngl*
By *ngl*
To the right of KJA 8.

10 *l ʿlṭ bn ʾmn*

By *ʿlṭ* son of *ʾmn*

To the left of KJA 6. *ʿlṭ* is not in HIn. For other occurrences of *ʿlṭ bn ʾmn*, see Index a.

11 *l lgm*

By *lgm*

To the right of KJA 10.

12 *l s¹ʿd*

By *s¹ʿd*

To the left of KJA 10 and 11.

13 *(l) mʿl*

By *mʿl*

The first letter has a stroke forming a fork, it is not as deep as the rest of the letters and I have emended it to *l*. The last letter has been hammered over and in some lights it looks as though it might be a *t*. The text is surrounded by a cartouche.

14 *h ḏs²ry l ʿḏ*

O *ḏs²ry* [grant?] to *ʿḏ*

To the right of KJA 13. For this type of prayer, see Ch.4.C.3.

15 *l ʿrb*

By *ʿrb*

To the right of KJA 14.

16 *w ʾs²ṣr ḫṭṭ*

And *ʾ s²ṣr* is [the] inscriber

On the right side of the rock. The third letter is slightly bent. The text runs down from between the legs of a drawing of a camel which was probably inscribed by *ʾ s²ṣr*, see the commentary on Adr 4 and Ch.4.B.2. for this formula used with drawings.

17 *l ftḥ bn gḫfl bn bhʾ bn ʾs¹lm*

By *ftḥ* son of *gḫfl* son of *bhʾ* son of *ʾs¹lm*

Starting to the left of the end of KJA 16. The last name is written curling back up. The *f*'s of the first and second names are of different shapes. There is a crack in the rock partly obscuring the tail of the *ḥ* of *gḫfl*. *ftḥ* is not in HIn. For an occurrence of *ftḥ bn gḫfl* see KJB 172 and see Ch.5.C.2, genealogy 1.

18 *l ʿbṯ°*

By *ʿbṯ°*

Above and to the left of the end of KJA 17. The last letter is a crudely hammered *ṭ*.

19 *l mḥs¹*

By *mḥs¹*

Below KJA 18. The name is not in HIn.

20 *ʿd ḏs²ry gḫf l h ybs¹°b rḥm w b gnnt w b s¹rr ʾ°ḫ*
bṅ bhʾ w qdr frḥt b mrʾt ḥdṯt

May *ḏs²ry* return *gḫf* to the woman with tenderness and with madness (of passion) and with joy *ʾḫ* ? son of *bhʾ* and may [*ḏs²ry*] cause happiness with a new woman

The text is below KJA 16. It is written down and then turns to the right and continues to the left. The last part is written upwards and then loops back.

The end of the inscription *b mrʾt ḥdṯt* suggests that the prayer is concerned with love or sexual desire although it is difficult, as with the other longer love texts, to offer a satisfactory translation. There is another 'love' prayer in KJB 138 which is less ambiguous. The spine of the first *d* is faint but the reading is certain. The first word might derive from the weak roots *ʿdd, ʿdw* or *ʿwd* of which the last Ar. Form I *ʿāda* 'return' provides the most satisfactory meaning although here the verb has a transitive sense which is found in Ar. form IV *ʾaʿādahu* 'restore it, return it'. The verb is a perfect with an optative sense. The object of the verb is *gḫf* or possibly *gḫfl*, both of which names occur frequently at these sites, although, since the verb *ʿāda* takes the preposition 'to', the *l* is most likely to be Ar. *li* 'to'.

The fourteenth letter was copied as *r* in the field but from the photograph the depth of the curve and a slight tail suggests that it is more likely a *s¹*. Given the uncertainty of the text it is worth mentioning possible translations should the reading *r* be correct. It might be a

proper name, *hybr* is listed in HIn: 631 as occurring in Qatabanian. Here is would be the name of a woman. An alternative division of the letters would be *hy b rb* etc. Ar. *haw$^{a\,n}$* means 'beloved' which would fit the context well although it is difficult to justify the lack of the medial *w*. *b* would be a preposition Ar. *bi* and *rb* the particle occurring frequently in other loves texts (see Ch.4.E.1), which I have translated as 'much'. The initial part of the text would then read 'May *ḏs²ry* return *gḫf* to a beloved [one] with much etc.'.

However, I am inclined to think that the fourteenth letter is a *s¹* and to read the letters *h ybs¹ b*, *h* being the definite article. *yabās* in Ar. has the meaning 'genitals' which would fit the 'love' context of the inscription and should perhaps be translated here as meaning 'woman'. An explicit reference to the female anatomy in a sexual context probably underlies the word *s¹lʿt* in KJC 539. *b* would be the preposition *bi* 'with'.

gḫf has asked to be returned to the woman with a number of positive attributes, in KJB 138 the author has asked *ḏs²ry* to grant a woman without a series of negative ones. For *rḥm*, cf. Ar. *ruhm* 'tenderness' and Syriac *rᵉḥem* 'tenderness, affection'. *gnnt* perhaps has a meaning similar to Ar. *junūn* 'loss of reason', referring here to the instability of 'madness' of passion. *s¹rr* occurs frequently in love texts at these sites, see KJA 24 (in an adverbial form) 46 etc., and I have translated it from Ar. *surūr* 'happiness or joy'. I am uncertain how the next part of the text *ʾḫ bn bhʾ* should be translated. The reading of the letters is fairly certain although one of the forks of the first *ʾ* does not appear to be joined to the rest of the letter, a stroke of the *ḫ* is faint, the *n*, although copied in the field, is unclear in the photograph and the *b* has a slight tail, giving it the appearance of a *k*. The name *bhʾ* occurs as the father of *gḫf* in KJB 47 and 57 and the authors of these inscriptions sometimes write their patronym after the main part of the text, although usually at the end rather than in the middle. It is possible *gḫf* intended to finish at this point and then decided to continue. This interpretation, however, makes it difficult to explain *ʾḫ*.

The following verb cf. Ar. *qaddara* 'determine, ordain', which I have translated as 'cause' is an optative with *ḏs²ry* as the implied subject. *frḥt*, Ar. *farḥah* 'joy', *mrʾt* Ar. *maraʾah*, the word probably occurs again in KJC 590. *ḥdṯt* is the fem. of Ar. *ḥādiṯ* 'new'.

21 *l grf bn mḥs¹*

By *grf* son of *mḥs¹*

Below KJA 19, on the left. There is a thick hammered line before the beginning of the text. *grf bn mḥs¹* occurs again in KJA 46.

22 *l nṣlt*

By *nṣlt*

Above the beginning of KJA 21. The second *l* is short compared to the other letters of the text a feature which recurs in other instances of the name found at this site, see, KJA 29a and 136.

23 *wdd hnʾ ftt ḥs¹nt f nkh f ġmt f ʾḏ f ns²rt*

hnʾ loved a beautiful young girl and he had sex with her and she was grieved, so he repeated (it) and she unfolded??

The text begins above and to the right of KJA 22 and loops round to the left. *hnʾ* has recorded his actions and the effect they have had on a young girl. For other love texts using *wdd* and *nk*, see Ch.4.E.2. *ftt*, Ar. *fatāh*, 'young girl'; *ḥs¹nt*, Ar. *ḥasan* 'beautiful', here with the feminine ending. *f*, cf. Ar. *fa*, here and in the other occurrences in the text, the particle has the sequential sense 'and so, thus'. The object of the verb *nk* is the third person feminine pronominal suffix, *-h*. *ġmt* and *ns²rt* are third person feminine verbs. I have translated the former from the root *ġmm*. Form I and III in Ar. have the meaning 'grieve s.o.' and Form VIII an intransitive sense 'be grieved, saddened' which is the meaning here. For *ʾḏ*, cf. Ar. *āḍa ʾilā*, 'return to s.th. i.e. do the thing a second time'. The translation of *ns²rt* is problematic. The Ar. verb *našara* means 'spread out, expand, unfold' none of which, if taken literally, are suitable here. A possible translation is suggested by the meaning 'unfold, spread out' which in a reflexive sense 'she unfolded herself' might mean 'she became compliant [to his advances]'. An antithesis to this might occur at the end of KJA 28 which is also about someone called *hnʾ* but not inscribed by him.

24 *l ġṯlh w rb s¹qm s¹rr b ġlmt f nkh s¹rr*

By *ġṯlh*; and a young girl feels much sickness of happiness and he had sex with her happily

The text starts to the right of the beginning of KJA 23 and then loops round to the right. The last word is written bending back to the right. The *f* is covered with an abrasion. For other love texts using the expression *rb*, see Ch.4.E.1. The construct *s¹qm s¹rr* 'sickness of happiness', which perhaps occurs as well in TIJ 264, is somewhat enigmatic. Possibly it refers to the destabilizing effect of passion. On the other hand, there are clear examples in the texts where letters have been left out (see Ch.3.B.10) and perhaps a *w* should be restored *s¹qm [w] s¹rr* 'sickness and happiness'. *s¹rr* at the end is an adverbial form of *surūr*$^{a\,n}$ 'happily'.

25 *l ts¹q bn zbd*

By *ts¹q* son of *zbd*

The text is written in the space between the first and final part of KJA 24. One stroke of the *t* is covered an abrasion. *ts¹q* is not in HIn, it occurs again in KJB 178.

26 *l dʿm bn ṣḥb*

By *dʿm* son of *ṣḥb*

Below and to the right of KJA 25. For other occurrences of *dʿm bn ṣḥb*, see Index a.

27 *l hnʾ bn zdqm*

By *hnʾ* son of *zdqm*

Below and to the right of KJA 26. *zdqm* is not in HIn. See Index a for other occurrences of *hnʾ bn zdqm*.

28 *nyk hnʾ ġlmt ʿṣ f s¹th w rṣt w ḫny w brd ḫṭṭ*

hnʾ had sex repeatedly with a young girl, with difficulty and he struck [her] on the buttocks and she closed up?, and *ḫny* and *brd* are [the] inscribers.

The text begins to the right of KJA 27 and is written in a zig-zag turning up towards KJA 29a and then turning down towards KJA 29b. For other texts using *nyk*, see Ch.4.E.2. The rest of the text after *ġlmt* is ambiguous. *ʿṣ* might be the name of the woman (HIn: 422) in apposition to the substantive. On the other hand, the verb *nk* in KJA 24 is followed by an adverbial expression and I have translated *ʿṣ* from Ar *ʿawiṣa* 'it became difficult' from which a verbal noun *ʿayṣ* is attested although rarely (Lane 2196b). *f*, is the particle *fa* with the meaning 'and so'. Ar. *satahahu* means 'he struck him on the buttocks', here the object must be supplied 'he struck [her] on the buttocks'. The translation of the next four letters is difficult. It seems to continue the sequence of events and *w* is probably the conjunctive particle. The *r* of the next word has been left out and is written to the right of the *w*. The next letter I have read as *ṣ*, as it copied in the field, although from the photograph there seems to be a shallow curve joining the fork and perhaps it is a *g*. The verb Ar. *raṣṣa* means 'stick together, join, make firm' referring to a building and also 'close'. *raṣṣāʾ* applied to a woman has the meaning '*impervia coeunti*' and is used in the expression *raṣṣāʾ al-faḫaḏayn* 'a woman whose thighs are close together'. I would suggest that the meaning here is 'she closed herself' i.e. resisted him. The twenty-second letter

which I have read as *b* was copied as a *ṭ*. Although there is a middle stroke, it is much shallower than the rest of the letter and it is probably extraneous. *bny* as a verb Ar. *banā* 'build' would have no relevance to the text and must be interpreted as a proper name. The inscription is written by him and *brd* and the word *ḫṭṭ* is probably a broken plural, although one would expect the dual to have been used.

The subject of both this and KJA 23 is someone called *hnʾ* and if both texts are about the same man, the accounts of his sexual activities are at variance, although it would be understandable that *hnʾ* should record a conquest whereas his friends leave snide remarks or a less successful account.

29 *nyk nht*

nht had sex repeatedly

The text is to the right of KJA 28. The first *h* has a slight hook to the tail. For other texts using *nyk*, see Ch.4.E.2.

29a *l nṣlt*

By *nṣlt*

To the right of KJA 29. For the shape of the second *l*, see KJA 22.

29b *l ʾs¹mnt bn ḥrm*

By *ʾs¹mnt* son of *ḥrm*

Starting below the end of KJA 28 and written curving to the right. For other occurrences of *ʾs¹mnt bn ḥrm*, see Index a.

Adr 4 The camel and rider above KJA 16 has a whitish patina but the depth of the camel suggests that it is an older drawing with the rider and saddle added later. The original part was probably drawn by *ʾs²ṣr* author of KJA 16. To the right is another camel of darker patina which might have been part of the same composition although the inscribing technique is slightly shallower.

Adr 5 Unidentified loops and curves above KJA 23-24.

VI Practically horizontal surface.

30 *l mḥwr bn ʾs¹lh bn ḫrgt bn wtr*

By *mḥwr* son of *ʾs¹lh* son of *ḫrgt* son of *wtr*

The first *bn* is written to the right of the rest of the text, most probably to enable the author to fit the remainder of his genealogy in between a crack and the edge of the rock. Part of the *t* of the last name is covered by an abrasion and the *r* has a somewhat extended arm.

VII South

31 *l qn bn wrl bn qn ṯtmt*

By *qn* son of *wrl* son of *qn* son of *ṯtmt*

The text is written in a loop. *ṯtmt* is not in HIn. *qn* is most probably the artist of Adr. 6 below the inscription.

Adr 6 There is a drawing of two camels below the inscription. One of them has its hind legs hobbled. There is a canine to the left, cf. the animal in Adr 137.

VIII South

32 *nḱ m(r)ʾmnt*

m(r)ʾmnt had sex

The spine of the *k* is faint. There is an abrasion after the *m* and I have restored a *r*. For love texts using *nk*, see Ch.4.E.2. *mrʾmnt* is not in HIn.

Adr 7 To the left of the inscription is a drawing of much lighter patina of two dogs attacking an ibex.

IX Southeast

33 *l mr*

By *mr*

34 *l ġṯ bn zhy*

By *ġṯ* son of *zhy*

zhy is not in HIn, see Index a and the Index of names for other occurrences.

Adr 8 Unidentified shapes and a stick man of lighter patina. An ibex with horns drawn right back over its body and the remains of another animal to the right.

Practically horizontal surface. See Pl.IIIb for KJA 35-36.

35 *l ʿm bn ʿly*

By *ʿm* son of *ʿly*

36 *l yḏr bn ʿbd yḏr bn whblh ḏ ʾl zydt w ḏkrt lt ʾs²yʿn*

By *yḏr* son of *ʿbd* son of *yḏr* son of *whblh* of the tribe of *zydt*; and may *lt* remember our companions

The text is written *boustrophedon* ending in a short third line. There is an abrasion over part of the second *y* and second *ḏ*. *yḏr* is not in HIn. *zydt* is not previously attested as a tribal name. For invocations using *ḏkrt*, see Ch.4.C.1. *ʾs²yʿ* is a broken plural, cf. Ar. *šayʿ*, *ʾašyāʿ* 'companions' with the first person plural suffix pronoun, *-n*.

37 *l lṯ bn ʾs¹lm*

By *lṯ* son of *ʾs¹lm*

The text is written below KJA 35-36. The *l* and *m* of the second of the second name are written on a different face.

Adr 9 Various shapes to the right of KJA 37.

XIII Southeast

38 *l ʿs¹y°*

By *ʿs¹y°*

Written vertically down the inside of camel's hump. The *y* is doubtful as there is a line going through it across the hump. The tail of the letter is short, sticking out to the left.

Adr 14 A camel inscribed by the author of KJA 38. It is drawn in a similar style to those in Adr 3. Lines have been added across the base of the neck and hump and two lines from the front and back join the three-sided rectangle that represent the legs. A line has been hammered

joining the bottom of the two inside legs. Hairs are depicted on the hump. There is an ibex and a dog on the right side of the rock face which seem to belong to the same period as each other, whilst the man firing a gun and ibex on the left are much more recent as are the camel and rider in the bottom left of the rock surface. There is a *wasm* of a straight line and circle.

XVI Southwest

39 *l ḥg bn°*

By *ḥg* son of

The text is written down the rock. The *n* is a dash. I have read the text as unfinished although it is possible the name should be read *ḥgbn*.

Horizontal surface

40 *l ʾḥls¹*

By *ʾḥls¹*

On the left side of the rock. *ʾḥls¹* is not in HIn.

41 *l ʿ--*

By *ʿ--*

Written between KJA 40 and 42. There are hammer marks after the *ʿ* and the text probably continues.

42 *l nhb*

By *nhb*

To the right of KJA 41.

43 *l mṭr*

By *mṭr*

XVII Southeast

44 *l ḏ̲ʾb ḫ(ṭ)ṭ kll bn s¹m ʿn bn qn*

By *ḏ̲ʾb* is [the] drawing all [of it] son of *s¹m ʿn* son of *qn*

The patronym and third name are written down from the legs of an ibex to the right of the beginning of the text. There is an abrasion over the first *ṯ*. For other occurrences of the genealogy, see Index a and see Ch.5.C.2, genealogy 4. For this formula used to refer to drawings, see Ch.4.B.1.

45 *l nhb*

By *nhb*

Written vertically below the end of KJA 44. It has been missed out in the photograph and is read from the field copy alone.

Adr 17 A hunting scene of two ibex being chased by a couple of dogs and shot at by an archer. On of the ibex has rather straight horns. Drawn by *ḏ ʾb* the author of KJA 44.

XVIII West

46 *rb s¹qm w s¹rr b grf bn mhṣ*

grf son of *mhṣ* feels much sickness and happiness

On the left side of the rock, written looping up and round. There are several letters above the word *s¹rr* which have been hammered over. For love texts of this type, see Ch.4.E.1. *mhṣ* is not in HIn. *grf bn mhṣ* occurs again in KJA 21.

47 *l ʿrb*

By *ʿrb*

To the right of KJA 46.

48 *l tnn bn hn̊ ʾ°*

By *tnn* son of *hn̊ ʾ°*

Below and to the right of KJA 47. Part of the fork of the *h* and one complete fork of the *ʾ* is obliterated. For other occurrences of *tnn bn hnʾ*, see Index a.

49 *l ḏb ʾ bn s¹m ʿn bn qn bn ms¹kt bn s¹ ʿd*

By *ḏ[ʾb]* son of *s¹m ʿn* son of *qn* son of *ms¹kt* son of *s¹ ʿd*

The first name is written down the rock, the middle part of the text horizontally and the final part down the rock and then up. *ḏb ʾ* is unattested as a name. The second and third

names of the genealogy are the same as those in KJA 44 and elsewhere, see Index a and Ch.5.C.2, genealogy 4, suggesting that it is a metathesis for *ḏ ʾb*. See Ch.3.A.10 for other mistakes in the inscriptions. *ḏ[ʾb]* does not claim the drawing explicitly here but the standard is the same as that in Adr 17 and it seems likely that the composition is his, although possibly other authors on the rock are co-artists.

50 *l grf*

By *grf*

Running vertically downwards under the belly of the upper ibex. There is a deeper mark shaped like a *l* after the *f* but I do not think it belongs to the text. Under the ibex to the left of the text are three filled in circles with a line between the first two.

51 *l s¹ ʿd*

By *s¹ ʿd*

On the right side of the rock.

52 *l ʿrs¹ b[n] ḥr̊*

By *ʿrs¹* son of *ḥr̊*

Written down below the middle of KJA 53. There is no *n* after the *b* and a slight abrasion after the final *r*.

53 *l ʾs²ṣr bn zdqm*

By *ʾs²ṣr* son of *zdqm*

Written horizontally above KJA 52. The names *ʾs²ṣr* and *zdqm* are not in HIn. See Index a for other occurrences of *ʾs²ṣr bn zdqm*.

Adr 18 A hunting scene of two ibex surrounded by three dogs and an archer. Drawn by one or possibly more of the authors of the inscriptions on the rock.

XIX South southwest

54 *l mtn*

By *mtn*

Written down between the front legs of a camel.

55 *w ḏ ʾb ḫt[ṭ]*

And *ḏ ʾb* is [the] inscriber

Written around the rear of the camel which was inscribed by *ḏ ʾb*. For this formula used to refer to drawings, see Ch.4.B.2.

Adr 19 A striding camel drawn by *ḏ ʾb* the author of KJA 55.

East

56 *l ḥḏr*

By *ḥḏr*

At the top of the rock, written downwards.

57 *Í (b)ll*

By *(b)ll*

Below KJA 56. The reading is doubtful.

57a *Í b--*

By *b--*

Below KJA 57. It is possible the text continues but nothing further is legible.

58 *l ʾnf*

By *ʾnf*

Written down, to the right of KJA 57a.

59 *l m(h)ṣ*

By *m(h)ṣ*

To the right of KJA 58. The tail of the *h* is written in a crack. The name is not in HIn.

60 *l kr-*

By *kr-*

On the left side of the rock. There is a chip after the *r* and the text might continue.

61 *l wb*

By *wb*

Above and to the right of KJA 60. *wb* is not in HIn. See Index a for other occurrences at these sites.

62 *l ʾmn w ʿ° (l)*

By *ʾmn* is [the] ibex

Above and to the right of KJA 61. Part of the *ʿ* and *l* are faint. The ibex to which *ʾmn* refers is on the right. See Ch.4.B.1. for this formula referring to drawings.

62a *l ḥ--*

By *ḥ--*

To the right of KJA 62, written under the head of an ibex. The rock is chipped after the *ḥ* and the text probably continues.

63 *-mʾl*

-mʾl

Above the horns of the ibex, to the right of KJA 62. There might be letters before the *m* obscured by cracks and hammering on the rock. The *m* is written over a crack and the *ʾ* and *l* inscribed slightly above, presumably to avoid it.

63a *l qn*

By *qn*

On the right side of the rock.

64 *l t̲ ʿlbn*

By *t̲ ʿlbn*

Below KJA 63a. The bottom part of the *t̲*, *l* and *b* are obscured by hammering. *t̲ ʿlbn* is not in HIn. The *ʿ* has a dot in the middle.

65 *l zdn (b) (ʾ)---*

By *zdn* son of *ʾ*---

To the right of KJA 54. Part of the *z* is covered by an abrasion as are the tops of the *b* and *ʾ* The first *d* and the first *n* are not as deeps as the other letters of the text. No letters are legible after the *ʾ*. The name *zdn* is not in HIn, see Index a for other occurrences of the name. *zdn bn ʾġnt* occurs in KJC 740.

66 *l ġnṯ*

By *ġnṯ*

Below KJA 60 on the left side of the rock. There is a chip over the *n* but the letter is still visible. The *ṯ* is inscribed on the other side of a drawing of a camel. Just below the *ġ* to the left are two lines joined by shallower hammering which might have been *ġnṯ*'s first attempt at a *ṯ* which he abandoned.

67 *l z*

By *z*

To the right of the beginning of KJA 66. The text is unfinished.

68 *l ġṯ*

By *ġṯ*

To the right of KJA 67.

69 *l mṭy bkrt*

By *mṭy* is [the] young female camel.

On the left side of the rock. The text starts in between the legs of the camel to which it refers and turns to the left. See Ch.4.B.1 for this formula referring to drawings.

70 *[l] s¹yr°*

[By] *s¹yr°*

A chip covers the beginning of the text and I have restored a *l*. The arms of the *r* are joined by faint hammering.

71 *l qrs¹*

By *qrs¹*

To the right of KJA 70. The name is not in HIn. It occurs frequently at these sites, see Index a.

72 *l mġn(y)*

By *mġn(y)*

Below and to the left of KJA 71. The *m* has a horizontal stance in a vertical text. There are traces of what is possibly *y* after the *n*.

73 *l rks¹*

By *rks¹*

Above and to the right of KJA 72.

73a *l h*

l h

Above the *s¹* of KJA 73. The text is unfinished.

74 *l qym[t]*

By *qym[t]*

To the right of KJA 73. There is a chip in the rock after the *m* which possibly obscures a *t*.

75 *--ḏs²ry ġṯw˚mṯy w s¹yr*

--ḏs²ry ġṯ and *mṯy* and *s¹yr*

Starting above and to the right of KJA 74. There are traces of a straight line and what might be a *r* at the beginning, although the rock is badly chipped and no letters are certain before the deity's name.

76 *w s¹yr (ḫ)ṭṭ bn s¹lm*

And *s¹yr* is [the] inscriber son of *s¹lm*

Written downwards under the belly of an ibex which was drawn by the author. The *bn* and the patronymic are written to the right of the first name and the word *ḫṭṭ*. For this formula used with drawings, see Ch.4.B.2 and for other occurrences of *s¹yr bn s¹lm*, see Index a.

77 *l bn--q*

By *bn--q*

Above and to the right of Adr 27. The first three letters are written horizontally and the *q* below and to the left. The middle of the text is obscured by chipping but there would be sufficient room for two letters. Perhaps *ʿ* and *t* should be restored, *bnʿtq* occurs elsewhere, see Index a for occurrences of the name.

78 *mʿn*

mʿn

The rock is worn before the *m* and an initial *l* might be obscured, although the text is inscribed deeply and no traces are visible.

79 *l rh°*

By *rh°*

Below KJA 78. The fork of the *h* is rather narrow.

80 *l s¹nr*

By *s¹nr*

Below KJA 79. The text is crudely written. There is no hook to the letter I have read as *l*. *s¹nr* is not in HIn.

81 *l ġ̊t̲*

By *ġ̊t̲*

Above and to the right of KJA 77. The text has been damaged. The *t̲* is hammered over but traces of the two crossbars are clear.

82 *l zr̊m-ʿ*

By *zr̊m-ʿ*

Below KJA 81, reading diagonally. The *r* and the *m* have been hammered over, although the latter letter is quite clear. There is a chip in the rock and then a clear *ʿ*.

83 *l ġrṭm bn nht bn ʾgnt bn mqẓ bn ʿrb bn ʿd bn ḫl bn krt*

By *ġrṭm* son of *nht* son of *ʾgnt* son of *mqẓ* son of *ʿrb* son of *ʿd* son of *hl* son of *krt*

On the right side of the rock. The beginning is written downwards with

the rest of the text surrounding it. After the second name the inscription continues to the right up the rock and then turns down on the left of the beginning. The initial *l* of KJA 82 is written between the sixth name of the inscription and the *bn* of the seventh. The names *ġrṭm*, *ʾgnt* and *mqẓ* are not in HIn. See Index a for other occurrences of *ġrṭm bn nht bn ʾġnt*.

84 *l ʾs¹mnt bn ḥrm bn m[tr]*

By *ʾs¹mnt* son of *ḥrm* son of *m[tr]*

The text is written down from the end of KJA 83. The second *bn* and the *m* of the third name are much shallower than the other letters of the text. I have restored *tr* at the end on the basis of other texts with this genealogy, see Index a and Ch.5.C.2, genealogy 2. *mtr* is not in HIn.

84a *l s¹rq*

By *s¹rq*

Written between the end of the name of *nht* in KJA 83 and the first name of KJA 84. Any possible continuation of the text is obscured by the *m* and *n* of KJA 84.

85 *l kbr*

By *kbr*

On the bottom left side of the rock. The text runs into the end of KJA 88.

86 *l tm*

By *tm*

Written down, above KJA 88.

87 *l qrs¹*

By *qrs¹*

To the right of KJA 86. The name is not in HIn. It occurs in KJA 71 on this rock and elsewhere, see Index a.

88 *l s¹lm bn ẓ ʿnt*

By *s¹lm* son of *ẓ ʿnt*

Written from right to left below KJA 86-87. *ẓ ʿnt* is not in HIn. For other occurrences of *s¹lm bn ẓ ʿnt*, see Index a.

89 *l ngl*

By *ngl*

Written down to the right and below KJA 76.

90 *l krt*

By *krt*

Written down, above the hind legs of a camel.

91 *l ʿ-rm̊*

By *ʿ-rm̊*

Below KJA 89. The middle three letters of the text have been hammered over and filled in. The second letter could be *w* rather than *ʿ*.

92 *nm̊(k) gml mnh*

gml had sex with *mnh*

To the right of KJA 91. The *n* and the spine of the *k* are doubtful. For love texts using *nk*, see Ch.4.E.2. *mnh* is not in HIn.

93 *lr ʿhs¹frḥ*

?????

93a *l fḫtn˚*

By *fḫtn˚*

Running down into the end of KJA 93. There is a hammered dot slightly to the right of the lower vertical crossbar of the *t*, which, although it appears to be shallower than the other letters of the text, I have read as a *n*. *fḫtn* is not in HIn. For other occurrences of the name, see Index a.

94 *l mḫr bn bnʾmt bn nʿmy*

By *mḫr* son of *bnʾmt* son of *nʿmy*

The text is written on a ledge in the rock to the right of KJA 93a. It turns to the left. *mḫr* and *bnʾmt* are not in HIn, see the Index of names.

Adr 20-22

20 On the upper part of the rock is an ibex drawn by *ʾmn* the author of KJA 62.

20a Below and to the left of Adr 20 a damaged drawing of an animal.

21 On the left of the rock, a camel drawn by *mṭy* the author of KJA 69 who says it is a young female camel. The tail of the animal is depicted as hanging down, see the commentary under Adr 3.

21a Above KJA 85 is a badly drawn camel.

22 In the centre of the rock is the body of an ibex ? which the head has been hammered over, drawn by *sʿyr* the author of KJA 76.

22a A camel of which the hump has not been filled in.

22b On the right side of the rock is a damaged drawing and below is a camel.

XXIV North

95 *l yqm*

By *yqm*

Part of the *m* has been chipped away but the reading is clear.

XXV Horizontal surface

96 *l nhb*

By *nhb*

Adr 27 To the left of KJA 96 is an ibex of light patina.

Adr 28 Below is a camel of light patina.

XXVI South

97 *ʾn ġr b sʿm b[n] ʿhl*

I am fond of *sʿm* son of *ʿhl*

There is a chip and crack in the rock after the second *b* and I have restored a *n*. For this type of love text, see Ch.4.E.3.

Adr 28a Doodling of whitish patina and a man with his arms in the air holding a bow and arrow.

XXVIII East

98 *l w*

By *w*

An unfinished text.

99 *l hnʾ bn zqdm*

By *hnʾ* son of *[zd]qm*

The inscriber has confused the positions of the *q* and *d* in the second name. For other examples of mistakes in the inscriptions, see Ch.3.B.10. *zdqm* is not in HIn. For other occurrences of *hnʾ bn zdqm*, see Index a. The ibex were probably drawn by *hnʾ*.

100 *l ḥn*

By *ḥn*

On the lower part of the rock.

Adr 32 Three ibex, probably drawn by *hnʾ* the author of KJA 99.

XXXII Southwest

101 *l drg bn ḍḥk*

By *drg bn ḍḥk*

Written down the rock and then to the left. See Index a for other occurrences of *drg bn ḍḥk*.

Adr 36 Two ibex ?, the head of the upper animal is lost under abrasions and its front legs run into the horns of the lower one. The drawings are a much lighter patina than the inscription.

XXXIII West

102 *l ʿry°*

By *ʿry*°

The loop of the *y* is very small.

Adr 37 A canine and possibly an unfinished drawing to the left. Below is an unidentified zig-zag line with two legs.

XXXVIII Southeast

103 *l ḏ(h)bn*

By *ḏ(h)bn*

The inscription is very worn and the fork of the *h* is doubtful.

Adr 42 The horns and parts of the body (?) of an ibex are just visible to the left of KJA 103.

XXXIX South

104 *l ḏ(h)(b)n*

By *ḏ(h)(b)n*

Most of the inscription has been obscured by hammering. The *n* is a fairly long dash.

105 *wdd qn ġlmt [w] lʿn ḏs² (r)y lʿn qn*

qn loved a young woman, and may *ḏs²ry* curse the curser of *qn*

The text is written down the rock. The second part, a curse, is written on the right of KJA 106. The arms of the *ġ* are short and the *w* introducing the curse has been obscured by a chip. The following *l* is much thicker than the other letters of the text. The *s²* is a squiggly line similar to the shape of the letter in Safaitic. The letter after the *ḏ* is a circle but it is carelessly hammered and it is possible that the marks enclosing the curve are misdirected hammering. I have restored it as *r*. For other love texts using *wdd*, see Ch.4.E.2. For *lʿn*, cf. Ar. *laʿana* 'curse s.o.'. The verb here is a perfect used for the optative. The object is a noun *lʿn*, cf. Ar. *laʿʿan* 'curser', in construct with the following proper name. This is the only instance of a curse among these texts, see Ch.4.D.

106 *l s¹mn*

By *s¹mn*

Written between the beginning and final part of KJA 105.

There is no KJA 107.

XL West

108 *l ʾrs²lh bn ʿhn*

By *ʾrs²lh* son of *ʿhn*

Written down the rock in neat careful letters. *ʾrs²lh* is not in HIn. It occurs elsewhere at these sites, see Index a.

XLIV Southwest

109 *l bn ʿtq*

By *bn ʿtq*

Written along the bottom edge of the rock. The name is not in HIn, for other occurrences, see Index a.

110 *l ṣbn*

By *ṣbn*

The text is written vertically between the horns of an ibex and its body. The rock is chipped after the *n* but there would be insufficient space for further letters.

111 *l krt bn ftḫt*

By *krt* son of *ftḫt*

The *bn* and second name are written to the left of the first part of the text and curve round under the feet of an archer. For other occurrences of *krt bn ftḫt*, see Index a.

Adr 45 A hunting scene of four ibex, one of which is being attacked by a dog from in front and behind and shot at by an archer. An arrow is shown in flight and another embedded in the animal's leg. There is a camel on the right side of the rock. The drawing is possibly a joint composition inscribed by the authors of KJA 110 and 111 and possibly 109 as well.

XLVI Practically horizontal

112 *l ʿrs¹ bn ḫrs¹ bn ʾs¹lm*

By *ʿrs¹* son of *ḫrs¹* son of *ʾs¹lm*

Written in a wavy line. For other occurrences of *ʿrs¹ bn ḫrs¹ bn ʾs¹lm*, Index a.

XLVII Southeast. See Pl. IVa.

113 *w ʿbd bn s¹yr frs¹*

And *ʿbd* son of *s¹yr* [the] horse

The text starts under the belly of the horse and then curves round below the front legs and up. There is very little space between the front of the horse and the edge of the rock. For this type of formula referring to drawings, see Ch.4.B.3. For other occurrences of *ʿbd bn s¹yr*, see Index a.

Adr 47 A horseman carrying a spear drawn by *ʿbd* the author of KJA 113. The body of the rider is decorated with horizontal and vertical lines and the horse's tail is depicted as two lines with hairs at the bottom. There is possibly an arrow piercing one of the rider's arms.

XLVIII North

114 *l l<u>t</u>*

By *l<u>t</u>*

115 *l s²mrḫ*

By *s²mrḫ*

Written below KJA 114. The last two letters are covered by hammering but the reading is certain.

East

116 *l ʿbd*

By *ʿbd*

117 *ml-----s^{1}ʔlt*

There is a *m* and a *l* next to the tail of the camel and then, further down the rock, the letters *s^{1}ʔlt*.

118 *l bnbs^{1}r*

By *bnbs^{1}r*

Written to the right of a camel. *bnbs^{1}r* is not in HIn, the name occurs elsewhere at these sites, see Index a.

119 *l kmn*

By *kmn*

Written under a drawing of a feline.

Adr 48 A feline attacking an archer. There are two lines drawn from the head of the animal to the man. Above, is a drawing of a running camel. Its legs are extended and the feet represented as being curved which is unusual.

Rock XLIX Practically horizontal

120 *l bʔ(n)yt*

By *bʔ(n)yt*

Written down the rock on the left side. The *b* has a very shallow curve and the *n* is covered by a chip.

121 *l hbṯ*

By *hbṯ*

The text starts to the right and below KJA 120. Part of the *l* is obscured by hammering. The name is not in HIn.

122 *l tr*

By *tr*

Written downwards above KJA 121. The rock is chipped above the *l*.

123 *l yġṯ*

By *yġṯ*

To the right of KJA 122. The tail of the *ġ* loops back to the spine of the letter.

124 *l ʿb*

By *ʿb*

On the right side of the rock. There is rather a large gap between the *l* and *ʿ*.

125 *l ʿ---*

By *ʿ---*

To the right and below KJA 124. The rock is chipped after the *ʿ*.

126 *l s¹(h)m*

By *s¹(h)m*

On the left side of the rock, starting immediately below KJA 120. Part of the third letter is obscured by a chip.

127 *[l] sr°ʾb*

[By] *sr°ʾb*

The text begins after the *m* of KJA 126 where the rock is chipped and no traces of the initial *l* remain. The *s¹* is partly covered by an abrasion. The *ʾ* and *b* are written on the edge of the rock.

128 *l ḫg bn mhṣ*

By *ḫg* son of *mhṣ*

The text is written horizontally, starting below and to the left of KJA 125. The name *mhṣ* is not in HIn. *ḫg bn mhṣ* possibly occurs again in KJC 686.

129 *r-sr°qfʿhl̃ʿn*

????

The letters have been hammered over in places and joined up.

L Practically horizontal

130 *lʾbg[t]*

By *bg[t]*

Written down the rock above a drawing of a camel. The initial *l* is uncertain. There is a chip after the *g* and I have restored a *t* on the basis of the name *bgt* occurring elsewhere, see Index a.

Adr 49 A camel, its head is damaged.

LI North

131 *l wʿ*

By *wʿ*

On the left side of the rock written above a small camel. The text is unfinished.

132 *l kmy bn tmlh w kmy ḫṭ(ṭ)*

By *kmy* son of *tmlh*; and *kmy* is [the] inscriber

The text is written curving to the right. There is a cartouche surrounding the first part and the drawing. It does not continue to include *w kmy ḫṭṭ* but stops before the *w* and the final *ṭ* of *ḫṭṭ*. The last letter is damaged. For this formula referring to drawings, see Ch.4.B.2. *kmy bn tmlh* occurs again in KJC 575.

133 *l ʾmrh*

By *ʾmrh*

Written down to the right of KJA 132.

Adr 50 Inside the cartouche with KJA 132-133 is a drawing of an animal with its body decorated in squares. It has no features from which one could identify it for certain as either a canine or feline although it is most probably the latter. *kmy*, KJA 132, says he is the inscriber but *ʾmrh,* KJA 133, might have participated in drawing it. Outside the cartouche, below KJA 131, is a small camel with only two legs and the hump not filled in.

LII Horizontal.

134 *l qn*

By *qn*

LV Sloping slightly north

135 *l ʿyl*

By *ʿyl*

136 *l nṣlt*

By *nṣlt*

nṣlt, see KJA 22 and 29a where the name is written with similarly short *l*'s. There is further a *t* and *ḫ* hammered on to the rock.

LVI Practically horizontal

137 *l bn(ʾ)mt*

By *bn(ʾ)mt*

On the right side. Part of the *ʾ* is covered by an abrasion.

138 *l (q)n bn wrl˚bn ʿkl b[n] s¹ʳw bn ẓnn bn wḏʾ bn zḥmn bn yḫld bn bns²br bn nbṭ*

By *(q)n* son of *wrl˚*son of *ʿkl* son of *s¹ʳw* son of *ẓnn* son of *wḏʾ* son of *zḥmn* son of *yḫld* son of *bs²br* son of *nbṭ*

The text gives ten generations and is the longest genealogy among the texts from this collection. Neither the whole nor part of the genealogy is repeated in other inscriptions. The *ḏ* of the name *wḏʾ* has an infilled circle.

139 *l m(ṣ)(r)(y) bn ftḥ˚bn nḫr*

By *m(ṣ)(r)(y)* son of *ftḥ˚*son of *nḫr*

To the left of KJA 138, with the second *bn* and the third name written to the right of the rest. The bottom of the letters of the first name are covered by an abrasion and the *ḥ* of the second name is faint and shallower than the other letters. *mṣry* is not in HIn although there is a doubtful occurrence of the name in Saf. ISB 274a, see Index a for other occurrences at these sites.

140 *l ġnṯ*

By *ġnṯ*

To the left of KJA 139.

141 *l bn*

By *bn*

Below and to the right of KJA 140. There is no hook to the *l* and the *n* is a dash. It is possible the text is unfinished.

142 *l lṯ*

By *lṯ*

To the right of KJA 141.

143 *ʿlwl*

ʿlwl

To the left of JC 142. The letters are all certain but the meaning is unclear.

144 *l qnlh*

By *qnlh*

To the left of KJA 143. *qnlh* is not in HIn but is attested in JaS 111. See Index a for other occurrences at these sites.

145 *l ʾnf*

By *ʾnf*

Underneath KJA 145.

146 *l bn ʿmh*

By *bn ʿmh*

To the left of a drawing of an ibex. The name is not in HIn, see Index a for other occurrences at these sites.

147 *l ʿb*

By *ʿb*

To the left of KJA 146.

148 *l s¹ ʿdlh*

By *s¹ʿdlh*

Underneath KJA 147. The *d* is inscribed over a crack and is doubtful. It seems to have arms curving in the direction of the text.

149 *[l] ʿbr*

[By] *ʿbr*

Above and to the left of KJA 147. The rock is damaged before the *ʿ* and I have restored a *l*.

150 *l ḥ---s²br bn yb bn ns²r b[n] (k)s¹y*

By *ḥ---s²br* son of *yb* son of *ns²r* son of *(k)s¹y*

Underneath KJA 149. The text is damaged and the letters indistinctly inscribed. There is a cartouche surrounding the inscription. Only a *ḥ* is legible of the first name and the following *bn* is completely obscured. *yb* is not in HIn. No *n* of the final *bn* is visible and the back of the *k* is unclear. *ks¹y* is not in HIn.

150a *l ḥb bn s²b°*

By *ḥb* son of *s²b°*

To the right of KJA 150. Part of the third *b* is covered by hammering.

150b *r ʿ*

r ʿ

To the right of KJA 150a.

Adr 54a There are two ibex and traces of other drawings.

LVII West

151 *l qnt*

By *qnt*

LVIII Northwest

152 *l ʾṣlḥ bn n(g)ʾ*

By *ʾṣlḥ* son of *n(g)ʾ*

Written down the rock. The bottom circle of the *g* is quite clear but the top circle is much smaller and partially covered by a chip. The line joining them is not quite attached to the bottom circle. See Index a for other occurrences of *ʾṣlḥ bn ngʾ*.

LXIII Practically horizontal

153 *l s²-*

By *s²-*

An unfinished text. The third letter might be a *s²* or part of an incomplete letter. There is a small fork at one end but it is not definite enough to be read with certainly as a *h*.

154 *l dʿm bn ṣḥb*

By *dʿm* son of *ṣḥb*

There is an abrasion surrounding most of the *ʿ*. For other occurrences of *dʿm bn ṣḥb*, see Index a.

155 *l s¹ʿd*

By *s¹ʿd*

156 *--tk̊db ʿl*

?????

The rock is worn before the *t* and no traces of letters are visible. The spine of the *d* is shallower than the lines of the other letters.

157 *w hnʾ w dgt w ʾm*

And *hnʾ* and *dgt* and *ʾm*

There are no traces of letters before the first *w*. The *d* has been filled in. *dgt* is not in HIn. For other texts of joint authorship, see Ch.4.A.6.

158 *l gḫfl*

By *gḫfl*

LXIX Northeast

159 *l yġṯ*

By *yġṯ*

Part of the *ṯ* has chipped away.

160 *l qs¹-*

By *qs¹-*

There is a fourth letter but only part of it remains.

Horizontal

161 *l bnyt ġḫt*

By *bnyt---*

The letters are quite clear despite some hammering that covers the text. The interpretation of the last three letters of the text is uncertain.

162 *l qn*

By *qn*

Above KJA 161.

163 *l gbn b*

By *gbn --*

The text is written in crudely shaped letters and both circles of the *g* have been filled in. It is probably incomplete. *gbn* is not in HIn.

164 *l qy*

By *qy*

To the right of KJA 163. *qy* is not in HIn. The text is possibly unfinished.

165 *l ftḥ*

By *ftḥ*

The name is not in HIn.

166 *-- ʾrl*

-- ʾrl

Part of a letter is visible before the *ʾ*.

166a *mn ʿs¹-*

mn ʿs¹- ?

Following directly on from KJA 166. There is no initial *l*. I have read the preceding *l* with KJA 166 as the technique of inscribing is similar to the other letters in that text. The fifth letter is hammered over, it possibly reads *t*. The name, if that is what it is, is not in HIn.

LXXII North

167 *l ʾs¹mnt*

By *ʾs¹mnt*

LXXIII West. See Pl. IVb.

168 *l ʿbdʾyb bn s¹ʿd*

By *ʿbdʾyb* son of *s¹ʿd*

The inscription is written round the bottom of an ibex which was drawn by *ʿbdʾyb*. The name is not in HIn. It occurs again in KJC 631a.

Adr 64 A prancing ibex drawn by *ʿbdʾyb* the author of KJA 168. The body has not been filled in.

LXXIV West

169 *l ḫ*

By *ḫ*

An unfinished text. Perhaps the writer of KJA 170 wrote this to begin with and then, thinking the second letter looked too much like a *ḫ* rather than an *ʾ*, started again.

170 *l ʾrs² [t] bn ʿl̊n*

By *ʾrs² [t]* son of *ʿl̊n*

The *bn* and patronymic are written slightly to the left of the rest of the text. There is a chip over the fifth letter and I have restored a *t*. The top of the second *l* is covered by an abrasion.

LXXVI North

171 *w dʿ ḏs²ry grf w ʾnʿm ḫṭṭ*

And may *ḏs²ry* call *grf*, and *ʾnʿm* is [the] inscriber.

The text is written down the rock and then curves up. For invocations of this type, see Ch.4.C.2.

171a *l b*

By *b*

An unfinished text to the right of KJA 171.

172 *l ḥ̊zrm*

By *ḥ̊zrm*

Below KJA 171. The *ḥ* is uncertain. The name is not in HIn.

173 *l s¹fn*

By *s¹fn*

To the right of KJA 172. The *n* is a dash.

174 *l ʿm*

By *ʿm*

To the right of KJA 173.

LXXVI West

175 *l dr(g) bn ḏ̊(ḥ)[k]*

By *dr(g)* son of *ḏ̊(ḥ)[k]*

The text is written near the left edge of the rock. The reading is extremely doubtful. On circle of the *g* is uncertain and a part of the outer circle of the *ḏ* is faint whilst only

traces of the inner circle remain. Half of the *ḥ* has chipped away. I have restored *k* afterwards on the basis of the name in KJA 101.

176 *(l) ʿm b[n] -hžm*

By *ʿm* son of *-hžm*

Written to the left of the back of the feline and continuing below the tail. Most of the *l* is obscured by a chip. No *n* is visible after the *b* and only a trace of the sixth letter remains. The fork of the *h* runs into the upper bar of the *z* and there is a shallower line joining the stroke of the *h* and the bottom bar of the *z*.

There is no 177.

178 *l (m)(b)-*

By *(m)(b)-*

To the right of the end of KJA 176. Part of the *m* and *b* are covered by chipping and the rest of the text is totally obscured.

179 *(l) (ʾ)(ʿ)bdt ḫṭṭ*

By *(ʾ)(ʿ)bdt* is [the] drawing

The first three letters are all damaged by chipping. *ʾʿbdt* is not in HIn. For other occurrences of the name at these sites, see Index a. For this formula referring to drawings, see Ch.4.B.1.

180 *w qrs¹ ḫṭṭ*

And *qrs¹* is [the] inscriber

To the right of KJA 179. The letters of the name have all been filled in. *qrs¹* is not in HIn, see Index a for other occurrences at these sites. For this formula used with drawings, see Ch.4.B.2.

181 *l krt*

By *krt*

The text is written to the left of the end of KJA 180. The *t* is inscribed to the left of the *r*.

182 *(l) ġṯ bn ʾdd*

By *ġṯ* son of *ʾdd*

To the right of KJA 180. On the hook of the *l* is visible, the *ṯ* is slightly hammered over and the strokes of one of the forks of the *ʾ* are doubtful.

Adr 67 A feline drawn by *ʾʿbdt* and *qrs¹* authors of KJA 179 and 180. Parts of the drawing have chipped away, four claws are depicted on the two back legs that remain.

LXXVII South

183 *---wr*

---wr

The rock is chipped and hammered before the *w* and nothing is legible.

184 *l qn bn qn*

By *qn* son of *qn*

bn qn are written to the left of the first name.

Adr 68 A damaged drawing of a camel being held by a stick man.

Adr 69 There is a small camel of a whitish patina above and to the right of Adr 68, it is not shown on the facsimile.

LXXXI Southwest

185 *l ʿqrb*

By *ʿqrb*

Adr 75 Three ibex and a horse ? being led by a man.

LXXXV West

186 *l ʾs¹mnt bn ḥrm*

By *ʾs¹mnt* son of *ḥrm*

On the left side of the rock. For other occurrences of *ʾsʿmnt bn ḥrm*, see Index a.

187 *l ʿbd bn zdqm*

By *ʿbd* son of *zdqm*

To the right of KJA 186. *bn zdqm* is written to the left of the first name. *zdqm* is not in HIn. *ʿbd bn zdqm* occurs again in KJC 768.

188 *rb sʿrr b mb ʿl*

mb ʿl feels much happiness

The text is written down and then turns up to the left, finishing below the end of the first name of KJA 187. For this type of love text, see Ch.4.E.1. The name *mb ʿl* is not in HIn, see Index a for other occurrences.

189 *l ʾn ʿm bn ml(k)*

By *ʾn ʿm* son of *ml(k)*

To the right of KJA 188. The text is written down and then turns up. The lower arm of the *k* is obscured by a chip. For other occurrences of *ʾn ʿm bn mlk*, see Index a.

190 *l ʾn ʿm bn brd*

By *ʾn ʿm* son of *brd*

On the left side of the rock, written below KJA 186 and turning to the right. For other occurrences of *ʾn ʿm bn brd* , see Index a.

191 *l ʿm bn bglt*

By *ʿm* son of *bglt*

To the right of KJA 190. Half of the *t* is covered by a chip. *bglt* is not in HIn. The name occurs elsewhere, see Index a.

LXXXVI Practically horizontal

192 *---sʿm ʿn°*

---sʿm ʿn°

The beginning of the text has chipped away and part of the *ʿ* and the letter read as *n* is covered by the abrasion.

LXXXCVII South southwest

193 *l bgt*

By *bgt*

The *t* is badly formed and written to the left of *g*. The text is accompanied by a drawing of a feline, cf. KJC 43, also by *bgt*, and the drawing Cdr 26.

Adr 79 A feline with most of its head chipped away. The claws are roughly inscribed, the back feet have three rather long ones.

LXXXVIII Southwest

194 *l ʿm bn ʾʿbd bn ʿbdt bn ʿm*

By *ʿm* son of *ʾʿbd* son of *ʿbdt* son of *ʿm*

The text is written in a loop. *ʿm bn ʾʿbd* occurs in KJC 274.

XC Southwest

195 *l ʾdr*

By *ʾdr*

The rock is chipped after the *r* but no traces of further letters are visible. The name is not in HIn.

XCI West

196 *l mġṯ*

By *mġṯ*

The text is hammered in rough lines.

XCII Southeast

197 *l hnʾ*

By *hnʾ*

198 *l ʾmn bn s¹dn*

By *ʾmn* son of *s¹dn*

The text begins directly below KJA 198. *ʾmn bn s¹dn* with an additional generation occurs in KJC 126.

XCIII South

199 *l s²mr[ḫ]---ḏ*

By *s²mr[ḫ]---ḏ*

Near the top of the south face of the rock. Only a stroke of the fifth letter is visible and *ḫ* has been restored on the basis of the name occurring elsewhere, see Index a. The rock is worn after the name but there are traces of a *ḏ* below the rest of the text which might be a continuation of KJA 199 or a separate text.

200 *l (ḥ)--*

By *(ḥ)--*

The middle of the second letter and the rock surface after it is chipped.

201 *[l] (ḥ)(y)lʿ*

By *(ḥ)(y)lʿ*

The initial *l* and part of the *ḥ* and *y* are obscured by an abrasion. The last letter is a faint line.

202 *l tmʾl (b)n n(h)t*

By *tmʾl* son of *n(h)t*

To the right of KJA 201, written near the edge of a crack. The top of the *b* and the *h* are obscured and the reading of the last name doubtful.

203 *l--ʾ*

By *--ʾ*

Below and to the left of KJA 202. No other letters are visible.

204 *l ṣmn*

By *ṣmn*

On the left side, near the bottom of the rock face.

205 *[l] (k)br*

By *(k)br*

To the right and above KJA 204, running down to the left of an ibex. The rock is chipped and the initial *l* and parts of the *k* are obscured.

206 *l ʾb*

By *ʾb*

To the right of KJA 205 on the other side of the ibex.

207 *l ʾs²ṣr (ḫ)ṭṭ*

By *ʾs²ṣr* is [the] drawing

Written down in a wavy line. Part of the *ḫ* is covered by a chip. *ʾs²ṣr* is not in HIn but occurs frequently elsewhere at these sites, see Index a. For the formula referring to drawings, see Ch.4.B.1.

208 *l ḥrs¹t bn flṭt*

By *ḥrs¹t* son of *flṭt*

Starting below KJA 205. The text is written down and then bends to the right. *ḥrs¹t* is not in HIn.

209 *l ʿlf*

By *ʿlf*

To the right and slightly above KJA 208.

210 *l g*

By *g*

To the right of KJA 209. The text is unfinished.

211 *l -m*

By *-m*

On the right side of the rock. The first letter of the name is obscured by hammering. The *m* has been partially filled in.

212 *l wḫ̊g bn ḏ̲k(y) bn̊°*

By *wḫ̊g* son of *ḏ̲k(y)* son of

To the right of KJA 211. The first two letters have been filled in and the *b* and *n* have been joined to form a monogramme. The next letter might be a *ḥ* but the similarities in the infilling and joining of this text and KJC 315 suggests that they are both by the same people and the letter should be read *ḏ* which is clear in the second name of the latter text. In which case, the letter, here, has only three arms that have been joined round the back forming a trefoil. The last letter of the second name is doubtful. It might be a which is clear in the second name of the latter text. In which case, the letter, here, has only three arms that have been joined round the back forming a trefoil. The last letter of the second name is doubtful. It might be a *y* with a short tail which is obscured by the infilling or a *r*. The last two letters might be a further monogramme of *b* and *n*. If that is so the text is unfinished. *wḫg* is not in HIn.

213 *l ʿlyn*

By *ʿlyn*

Above and to the right of the beginning of KJA 212.

214 *l drh*

By *drh*

To the right of KJA 213.

215 *l w ʿl bn qnt*

By *w ʿl* son of *qnt*

Below KJA 214. The *w* and part of the *ʿ* have been filled in.

216 *l grf̊*

By *grf̊*

To the left of KJA 215. The *r* is uncertain as the curve of the letter does not seem to be as deep as the rest.

Adr 82 Three ibex, a camel and a camel and rider. *ʾs²ṣr* the author of KJA 207 claims a drawing but probably the authors of the other inscriptions drew some of the drawings as well. There are other drawings on the rock face.

North

217 *l gḥf*

By *gḥf*

On the top left of the rock face. *gḥf* is not in HIn. For other occurrences of the name, see Index a.

218 *hs¹*

hs¹

It is possible *hs¹* should be read with KJA 219 as a joint text but the technique of inscribing is slightly different and it is perhaps more likely to be separate. For texts of simple authorship without an introductory particle, see Ch.4.A.4.

219 *w kʿm*

And *kʿm*

See KJA 218. *kʿm* is not in HIn. For texts of simple authorship beginning with *w*, see Ch.4.A.3.

220 *l brr*

By *brr*

Above KJA 219.

221 *l w--*

By *w--*

Above and to the right of KJA 220. The rock is chipped and only the first two letters of the text are legible.

222 *-bn ḥr bn y*

-son of *ḥr* son of *y*

The abrasion in the rock before the *b* might obscure the beginning or the inscription might be the continuation of the genealogy of KJA 221. The text is unfinished.

223 *l ʿlṭ*

By *ʿlṭ*

On the left side of the rock. *ʿlṭ* is not in HIn. It occurs again in KJA 263 and 271 on this rock and frequently elsewhere at these sites, see Index a.

224 *l ġrṭ[m]*

By *ġrṭ[m]*

To the right of KJA 223. There are no traces of a *m* which I have restored on the basis of the name occurring in KJA 270 on this rock and frequently elsewhere at these sites, see Index a. *ġrṭm* is not in HIn.

225 *l ʾs¹mnt bn ḥrm*

By *ʾs¹mnt* son of *ḥrm*

Starting below KJA 223 the text bends sharply round with the final *r* and *m* written above the letters *b*, *n* and *ḥ*. For other occurrences of *ʾs¹mnt bn ḥrm*, see Index a.

226 *l ʾs²rs¹*

By *ʾs²rs¹*

Starting above and to the right of KJA 225. The *s²* is a slightly bent line. *ʾs²rs¹* is listed in HIn: 48 as occurring in Sab. and occurs in AMJ 78.

227 *l bnlh*

By *bnlh*

To the right of KJA 226. The reading is uncertain as there is a rather large gap between the *b* and the *n*.

228 *l ʿlt bn wdd*

By *ʿlt* son of *wdd*

Starting above and to the right of KJA 227.

229 *l ġnṯ*

By *ġnṯ*

To the right of KJA 228. The name occurs in KJA 238 on this rock.

230 *l lṯ*

By *lṯ*

Below and to the left of KJA 229. The *ṯ* has three crossbars.

231 *l ḫḏmn bn nht*

By *ḫḏmn* son of *nht*

Starting below the end of KJA 229. There is a crack in the rock after the first name and *bn* and the patronymic are written below it. *ḫḏmn* is not in HIn.

232 *rbt sˡqm b km l ḥd*

km feels much sickness for *ḥd*

Starting above and to the right of KJA 231 and written in a wavy line down the rock. For this type of love text, see Ch.4.E.1.

234 *l l*

By *l*

Above the beginning of KJA 232. A false start at a text.

235 *l rfd*

By *rfd*

To the right of KJA 234. The *r* and the curves of the *f* have been infilled in. The original outlines of both the letters are visible despite the infilling.

236 *l mṯy bn mrʾmnt*

By *mṯy* son of *mrʾmnt*

Written in a curve below KJA 235. The *y* of the first name was originally left out and then added to the left of the *ṯ*. *mrʾmnt* is not in HIn.

237 *l km bn ʾsˡlm*

By *km* son of *ʾsˡlm*

To the right and above KJA 236. The *bn* and the patronymic are written to the right of the first name. The initial *l* is rather thick and has probably been subsequently hammered over. The *k* is doubtful as in some lights there appears to be a third arm attached to the spine of the letter.

238 *l ġnṯ*

By *ġnṯ*

On the left side of the rock. The name occurs in KJA 229 on this rock as well.

239 *l s¹yr*

By *s¹yr*

To the right of KJA 238. The text is written next to a small drawing of a camel.

240 *l mn*

By *mn*

Written to the right of KJA 339.

241 *l°r(g)m°*

By *r(g)m°*

To the right of KJA 240. The letter read as *l* is a thick line on the other side of a crack in the rock. One circle of the *g* is faint and the other obscured by hammering. *rgm*, HIn: 271 where is it listed in Sab. as the name of a well.

242 *l s²ṣr*

By *s²ṣr*

On the left side of the rock, starting below KJA 238. There is an additional line before the beginning of the inscription.

243 *l nmr*

By *nmr*

To the right of KJA 242.

244 *l ʾmr°*

By *ʾmr°*

To the right of KJA 243. There is an abrasion covering part of the *r*.

245 *l kmnt bn ṭyq*

By *kmnt* son of *ṭyq*

Starting below and to the left of KJA 244. The tail of the *y* faces in the direction of the text. Neither of the names are in HIn.

246 *l fḍn*

By *fḍn*

Written down to the right of KJA 245. *fḍn* is not in HIn. The name occurs again in KJC 217.

247 *l ḍb˚*

By *ḍb˚*

Above KJA 246. The last letter might be a *r*.

248 *l s²r*

By *s²r*

To the right of KJA 247.

249 *l y-*

By *y-*

Written directly below KJA 248. There is a chip after the *y* and the text might continue.

250 *l mty bn rfʾy*

By *mty* son of *rfʾy*

Starting above and to the right of KJA 248. For other occurrences of *mty bn rfʾy*, see Index a.

251 *l -*

By -

To the right of KJA 250. The second letter is probably incomplete and the text unfinished.

252 *l f*

By *f*

To the right of KJA 251. The text is incomplete.

253 *h (ḏ)s²*

O *(ḏ)s²*

The *ḏ* is partly covered by an abrasion. The horns of a recent ibex might obscure any further letters of the text or the inscription might not have been completed. It is possibly the beginning of a prayer to *ḏs²ry*, see Ch.4.C.3.

254 *l s²*

By *s²*

Above the beginning of KJA 255. The second letter which I have read as *s²* is slightly squiggly. The text was not finished.

255 *l ʾrs²lh*

By *ʾrs²lh*

To the right of KJA 252a. The name is not in HIn. See Index a for other occurrences at these sites.

256 *dḫb*

dḫb

The *d* has been filled in and the reading of the letter is uncertain. There is a further *b* below the horns of an ibex which might be a continuation of the text. *dḫb* is not in HIn.

257 *l mḫr*

By *mḫr*

To the right of KJA 256.

258 *l drs¹t bn kr(t)*

By *drs¹t* son of *kr(t)*

Starting to the left of the horns of a recent drawing of an ibex. The text is written down and then curves round to the left. Part of the final *t* is obscured by a chip. *drs¹t* is not in HIn, see Index a for other occurrences at these sites.

259 *(l) k(m)ʾt*

By *k(m)ʾt*

To the right of KJA 258. The bottom parts of the *l* and *m* are covered by more recent hammering. *kmʾt* is not in HIn. It occurs again in KJC 610 and 657.

260 *l ʿb*

By *ʿb*

Written to the right of KJA 259.

261 *l rms¹*

By *rms¹*

Next to KJA 260.

262 *l l*

By *l*

To the right of KJA 261. The text is unfinished.

263 *l ʿlṭ*

By *ʿlṭ*

In the centre of the rock below the end of KJA 258. *ʿlṭ* is not in HIn. See Index a for other occurrences at these sites. On this rock it occurs in KJA 223 and 271 as well.

264 *l rbt* and then altered to *l rks¹*

By *rbt* By *rks¹*

Reading down to the right of KJA 263. It looks as though the name *rbt* has been altered to *rks¹*. There is a shallow line drawn on to the *b* to form a *k* and two prongs have been added on to the left side of the *t* to form an *s¹*. The horizontal line of the *t* acts as the tail of the letter.

265 *(l) k(ʾ)t*

By *k(ʾ)t*

On the right side of the rock. There is an abrasion over most of the *l* and one fork of the *ʾ*. *kʾt* is not in HIn. It occurs elsewhere at these sites, see Index a.

266 *l mbʿl*

By *mbʿl*

In the centre of the rock below KJA 263. The name is not in HIn. See Index a for other occurrences.

267 *l ḫlf*

By *ḫlf*

To the right of KJA 266.

268 *l s²b*

By *s²b*

To the right of KJA 267.

269 *l g*

By *g*

To the right of KJA 268. An unfinished text.

270 *l ġrṯm bn nht bn ʾġnt*

By *ġrṯm* son of *nht* son of *ʾġnt*

Written in a zig-zag to the tight of KJA 269. The names *ġrṯm* and *ʾġnt* are not in HIn. See Index a for other occurrences at these sites, and KJA 83 for the above genealogy with additional generations.

271 *l ʿlṭ*

By *ʿlṭ*

To the right of KJA 270. The name is not in HIn. See Index a for other occurrences. It is attested again on this rock in KJA 223 and 263.

272 *l ġn ˁ*

By *ġn ˁ*

To the right of KJA 271. The letters are badly formed and one fork of the ʾ is very shallow. *ġnʾ* is not in HIn.

273 *l drʿ*

By *drʿ*

Written horizontally near the bottom of the rock. It is possible the last letter should be read *b*.

274 *l qnʿb*

By *qnʿ-*

Written down the rock and turning to the right. *qnʿ*, is not in HIn. The text is incomplete.

275 *l ʿb*

By *ʿb*

To the right of KJA 274. The name occurs as well in KJA 260 on this rock. Hooks in shallower lines have been added on to the lines of the *b* forming a *f* perhaps with the intention of changing the name into *ʿf*.

276 *l ḥr*

By *ḥr*

Below and to the right of KJA 275.

277 *l grf*

By *grf*

Written down to the right of KJA 276.

Adr 82 Only some of the drawings on this face are included on the facsimile as they are mainly faint and damaged. On the upper face of the rock there are the traces of two ibex and an archer. There is a camel next to inscription KJA 239 and traces of ibex and an archer in between other texts. The horns of the ibex below KJA 254 have been 'touched up'.

North

278 *l ʾnʿm bn m--*

By *ʾnʿm* son of *m--*

The rock is covered in abrasions and nothing is legible after the second *m*. It is possible *lk* should be restored and the name *ʾnʿm bn mlk* read, see KJA 189, 305 and 309.

Adr 82a A damaged drawing of an ibex.

XCIV Northwest, the rock surface is very eroded. The distance between some of the inscriptions on this rock is not drawn to scale.

279 *l qn̊*

By *qn̊*

The form of the *q* is unusual as the lines of the letter are not centrally placed.

280 *l f -*

By *f -*

Below KJA 279. Only a line of the third letter remains.

281 *l s¹ʿd*

By *s¹ʿd*

To the right of KJA 280.

282 *l n(ʿ)m*

By *n(ʿ)m*

On the left side of the rock. Part of the *ʿ* and *m* are covered by hammering.

283 *l (ʿ)k*

By *(ʿ)k*

The *ʿ* is covered by a chip. There is an abrasion after the *k* and the text may continue.

284 *l s¹lṭ*

By *s¹lṭ*

The name is not in HIn.

285 - ʿ--*d*--

- ʿ--*d*--

Written below the drawing of a camel. There are the remains of one or possibly two letters before the ʿ There is room between the ʿ and the *d* for another two letters but nothing is visible. The rock is chipped below the *d* and it is possible that the letter belonged to another inscription the rest of which has since disappeared.

286 *[l] (ḥ)(z)br*

By *(ḥ)(z)br*

Below KJA 285. The rock surface surrounding the inscription is damaged. Only a small part of the *l* remains and part of the *ḥ* has disappeared. The *z* is written at a slant and part of one of the lines has chipped away. The name *ḥzbr* is not in HIn. It occurs frequently elsewhere at these sites, see Index a.

Adr 83 (a) A camel above KJA 285.

(b) A camel on the lower part of the rock.

XCV Practically horizontal. The distance between some of the inscriptions on this rock is not drawn to scale.

287 *l* s^1 *ʿd*

By s^1 *ʿd*

288 *l* qrs^1

By qrs^1

Below KJA 287. The name is not in HIn. See Index a for other occurrences at these sites.

289 *l ḏb bn ʾlb (b)n* s^1-

By *ḏb* son of *ʾlb* son of s^1-

The first two letters are written with thinner lines than the rest of the text. Two of the letters of the inscription are written back to front, the *b* of the first name and the *l* of the second. The *b* of the second *bn* is incomplete and no letters are visible after the s^1.

XCVIII Horizontal

290 *(w) ḏ(ʾ)(b) [ḫṭṭ] bn s¹(m)ʿ[n]*

And *ḏ(ʾ)(b)* is [the inscriber] son of *s¹(m)ʿ[n]*

Parts of several of the letters are covered by abrasions. The rock is chipped after the *b* of *ḏʾb* and after the *ʿ* of *s¹mʿn* and nothing is legible. It is possible that the word *ḫṭṭ* was inscribed after the first name as suggested above or after the patronym. For the formula used with drawings, see Ch.4.B.2. For other occurrences of *ḏʾb bn s¹mʿn*, see Index a. There is a drawing of a camel between the first and second names and of an archer to the right of the first name.

291 *l s¹yr*

By *s¹yr*

To the right of KJA 290. The text is written down between the legs of an ibex. The name occurs again in KJA 292.

292 *w s¹yr ḫṭṭ*

And *s¹yr* is [the] inscriber

The text starts from under the belly of a dog and curves to the left. *s¹yr* occurs in KJA 291 on this rock. For the formula referring to drawings, see Ch.4.B.2.

Adr 87 A damaged drawing of a camel and an archer drawn by *ḏʾb* the author of KJA 290 and an ibex and a dog both with inscriptions, KJA 291 and 292, by someone called *s¹yr* written between the legs of the animals. It is most likely that all three drawings were intended as a joint composition.

CII East

293 *l gḫf*

By *gḫf*

The *f* is written in a thicker line than the rest of the letters. The rock is chipped after it and the text might have continued. *gḫf* occurs frequently at these sites, see Index a.

294 *rb s¹rr*

Much happiness

To the right of KJA 294. For this type of love text, see Ch.4.E.1. The name of the person who is experiencing the emotion is usually made known in these texts but here he has either wished to remain anonymous or the text is incomplete.

295 *l mbʿl*

By *mbʿl*

To the right of KJA 294. The name is not in HIn. It occurs frequently elsewhere at these sites, see Index a.

296 *l g(r)s²*

By *g(r)s²*

The third letter is covered by a chip.

Adr 91 Above the inscriptions is a drawing of a stick archer ? with an unidentified drawing to the right of it.

CX Northeast

297 *l dʿgg*

By *dʿgg*

There is a chip going across the first three letters and one of the circles of the final *g* is filled in.

298 *w ḏlhs¹ᵉbn s²ʿlh*

And *ḏlhs¹ᵉ* son of *s²ʿlh*

The *bn* and the patronymic is written under the first part of the text. There is a crack in the rock separating the tail of *ḏ* from the rest of the letter. A slight abrasion covers the tail of the *s¹* of possibly the letter should be read as a *r*. *ḏlhs¹* and *s²ʿlh* are not in HIn although the latter name occurs in WAM T 12, see the Index of names. For texts of simple authorship with an introductory *w*, see Ch.4.A.3.

299 *[l] (y)qm bn ʾ--y*

By *(y)qm* son of *ʾ--y*

The text is badly damaged.

300 *l hnʾb[n]*

By *hnʾ* son of *zdqm*

The text continues on from the end of KJA 299. The *b* of *bn* is covered by hammering. *zdqm* is not in HIn. For other occurrences of *hnʾbn zdqm*, see Index a.

300a *l d-*

By *d-*

To the right of the end of KJA 299. The rock is worn after *d* and the text probably continues.

Adr 103 There is an ibex to the right of the end of KJA 298. Below is a one horned ibex and the hind legs of an animal. Below is an ibex, a horse and rider with a camel underneath. To the right is another horseman.

CXIII Northwest

301 *l ġṯrn*

By *ġṯrn*

Written down underneath the drawing of a camel. *ġṯrn* is not in HIn.

Adr 106 A camel probably drawn by the author of KJA 106.

CXVIII East

302 *l (m)ṯr*

By *(m)ṯr*

The *m* is incomplete as the inside lines of the letter have not been joined.

Adr 112 There is a camel and damaged joined rectangular shapes to the right of the inscription. Above is a damaged drawing of an ibex ?

CXXIV Horizontal

303 *l ʿ-*

By *ʿ-*

The rock is chipped after the *ʿ* and only part of another letter remains.

304 *-nʾ bn zdqm (b)n rb°*

-nʾ son of *zdqm* (son) of *rb°*

The text is chipped before the *n* and only part of another letter remains. Perhaps a *h* should be restored and the name *hnʾ* read. After the *m* the rock is chipped and the remaining letters are inscribed in slightly thicker and less careful lines.

CXXV Southeast

305 *l ʾnʿm bn mlk*

By *ʾnʿm* son of *mlk*

For other occurrences of *ʾnʿm bn mlk*, see Index a.

CXXX East

306 *l rks¹*

By *rks¹*

307 *l yʾ---b*

By *yʾ---b*

The rock is chipped after the *ʾ* and only part of a further letter, which might be a *b* or *r*, remains. It is possible that KJA 308 which I have read as a separate inscription is the end of the present text.

308 *l qt*

By *qt*

See KJA 307.

CXXXIII Northwest

309 *l ʾnʿm bn mlk*

By *ʾnʿm* son of *mlk*

The two inscriptions on this rock provide a good contrast of techniques of inscribing between a directly hammered text and a neat indirectly hammered text. For other occurrences of *ʾnʿm bn mlk*, see Index a.

310 *l tm bn znd*

By *tm* son of *znd*

See KJA 309.

CXXXVI Northwest

311 *l ġn*

By *ġn*

Written on the edge of the rock face. It is possible that the text is unfinished.

Northeast

312 *l rʿ-m*

By *rʿ-m*

To the left of KJA 311. A more recent curved line runs through the middle of the text obscuring the fourth letter.

313 *l bnʿmh bn mtr*

By *bnʿmh* son of *mtr*

To the right and slightly above KJA 312. Neither of the names are in HIn.

314 *l knn bn ʿlṭ*

By *knn* son of *ʿlṭ*

Curling round the end of KJA 313. Neither of the names are listed in HIn as occurring in Early North Arabian although *knn* is attested in Qat. and Sab. Both names occur frequently elsewhere at these sites, see Index a.

315 *l ʾnʿm*

By *ʾn ʿm*

On the left side of the rock. The *m* is partially covered by some hammering.

316 *l s¹ḫr*

By *s¹ḫr*

Above KJA 315.

317 *l ḥrm°*

By *ḥrm°*

To the right of KJA 316. The *m* is partially covered by hammering.

318 *l ḥzyt bn w ʿḏ*

By *ḥzyt* son of *w ʿḏ*

Below and to the left of KJA 317. The text is written in a cartouche. *w ʿḏ* is not in HIn.

319 *[l] ʿrhz*

By *ʿrhz*

The *l* is obscured by a more recent drawing of a camel and rider.

320 *l ʿbd bn (s¹)yr bn (s¹)l(m)*

By *ʿbd* son of *(s¹)yr* son of *(s¹)l(m)*

Above and to the right of KJA 319. Part of the first *s¹* is covered by recent hammering and all the letters of the third name are partially damaged by a ray of the star. The *m* is partly covered by one of the dots as well. For other occurrences of *ʿbd bn s¹yr*, see Index a.

321 *(l) -s¹⁰(f)ḍr ?*

By *-s¹⁰(f)ḍr ?*

To the left of the end of KJA 320. The legs of a drawing of a camel partially cover several letters of the text and the reading is very uncertain.

322 *l z(h)y*

By *z(h)y*

Written to the left of the star. One prong of the *h* is damaged by a chip in the rock. The name is not in HIn. It occurs again in KJA 34 from this site.

323 *l ḥd*

By *ḥd*

On the bottom right hand part of the stone.

Adr 126 (a) On the left side and lower parts of the rock are a camel and rider, two ibex (one in outline) and a canine. The rider of the camel is sitting on the top of the hump with his legs out in front of him. In one hand he is holding a whip ? and in the other a stick which extends down to the camel's neck. There is the figure of a man with his hands in the air through which runs the cartouche surrounding KJA 318.

(b) On the right side of the rock with a white patina, are a camel rider and a star with eight rays. There are seven dots drawn between the rays.

CXXXVIII West

324 *l* $s^{1\circ}$

By $s^{1\circ}$

The text is unfinished. The second letter is doubtful as it is partially covered by a hammer mark. It might be a *r*.

325 *l* rks^{1}

By rks^{1}

CXLIII South

326 *l* $frds^{1}$

By $frds^{1}$

327 *l* $'s^{1}lm$

By $'s^{1}lm$

The second and third letters are damaged by a chip but the reading is certain.

CXLIV Northeast

328 *l mtʿ*

By *mtʿ*

Written down the rock with the ʿ to the left of the *t*. There are two drawings of camels to the left.

Adr 132 To the left of the inscription are two camels which have been drawn in outline and then partially filled in. They were probably inscribed by the author of KJA 328. Above is a third camel.

CXLIV Southwest

329 *l gl*

By *gl*

330 *l ḥgg*

By *ḥgg*

CXLV Southwest

331 *l bṣ(ṣ) bn km*

By *bṣ(ṣ)* son of *km*

The inscription turns at an angle after the first name. The second *ṣ* has a line going across the middle and the surface of the rock with the circle of the letter is chipped although traces are still visible. *bṣṣ* is not in HIn.

332 *l ʾnʿm b[n] b[r][d] bn mṯ[r]*

By *ʾnʿm* son of *b[r][d]* son of *mṯ[r]*

The text is damaged by chipping and some of the letters have been joined up and filled in with rough hammering. The restoration of the letters is based on the genealogy occurring elsewhere, see Index a and Ch.5.C.2, genealogy 2. In the first name on of the forks of the ʾ is joined to the *n* and the ʿ is attached to the *n* and the *m* by short hammer marks. The first *b* is small and rounded compared to the other instances of the letter in the text. The following *n* is

covered by a chip. Only the *b* of the second name and a small part of the third letter remain. The letters of the last name are joined together with a line going from the middle of the *m* to the crossbar of the *t* and from the other side to the final letter which has been completely filled in.

333 *l dr*

By *dr*

Underneath the end of KJA 332. The *d* has been hammered over and there is a stroke protruding from the *r*.

334 *l ʾs²s²*

By *ʾs²s²*

The name is not in HIn, see Index a for other occurrences at these sites.

335 *l ḥb*

By *ḥb*

336 *l ʿm*

By *ʿm*

The rock is chipped after the *m* but most probably the text does not continue.

CXLVIII Southwest

337 *l ʿbd bn s¹yr*

By *ʿbd* son of *s¹yr*

The *l* has a horizontal stance. It is possible that the author was going to write the inscription up the face of the rock and then changed his mind but did not bother to change the direction of the letter. For other occurrences of *ʿbd bn s¹yr*, see Index a.

338 *(l) ʿb*

By *ʿb*

To the right of KJA 337. Only the hook of the *l* is visible. The text might have been a false start at KJA 337.

Adr 135 Two ibex drawn in outline to the right of the inscriptions KJA 337 and 338.

CXLIX Horizontal

339 *l wb*

By *wb*

On the left side of the rock. The name is not in HIn. For other occurrences at these sites, see Index a.

340 *l ḫrm*

By *ḫrm*

341 *l zm bn qn ms¹kt*

By *zm* son of *qn* son of *ms¹kt*

Written diagonally down the rock and turning to the left. See Ch.5.C.2, genealogy 4 for possible relations of *zm*.

342 *l ns²*

By *ns²*

The name is not in HIn. It is possible that the text was not finished.

343 *l ġrb bn°- ʿl*

By *ġrb* son of *- ʿl*

Written downwards and turning right to the end of KJA 342. The rock is chipped after the first *b* and the *n* of *bn* is uncertain. There is sufficient space for a seventh letter but no traces of one remain.

CL West

344 *l mḫllt*

By *mḫllt*

The first *l* is quite clear and has not got a hook. *mḫllt* is not in HIn. The name occurs again in KJC 469.

Adr 137 A canine (cf. Adr 6) with a badly formed figure ? above and another with his arms in the air below.

CLIII Northwest

345 *(l) brd*

By *brd*

Most of the *l* has chipped away.

CLIV North

346 *w mṭr ḫṭṭ*

And *mṭr* is [the] inscriber

For this formula referring to drawings, see Ch.4.B.2. To the left of the inscription is perhaps a *wasm*, cf. Field 1952 nos. 464, 469, etc. or an attempt at an inscription.

Adr 140 There is a drawing of a canine ? to the right of the inscription and a damaged drawing of a camel in the bottom right hand corner.

CLVII North

347 *-kẗ-*

-kẗ-

The rock is chipped and only the *t* is certain. The second letter could be a *k* or possibly a *ṭ* with the third prong obscured. The curve of the fourth letter might be part of a *f*.

CLVIII Horizontal

348 *h lhm l lṯ*

O *lh* [grant] to *lṯ*

Part of the *ṯ* is covered by a chip but sufficient is visible for the reading to be certain. For this type of prayer, see Ch.4.C.3.

CLXI South

349 *l ḥr bn ʾdrm*

By *ḥr* son of *ʾdrm*

The first part of the text is written down and the last two letters up to the right, probably in order to avoid a crack in the rock. *ʾdrm* is not in HIn. For other occurrences of *ḥr bn ʾdrm*, see Index a.

Adr 145 Three ibex all drawn in different ways. The lower one has distinct cloven feet. There is a schematic drawing of an ostrich ? and a man with his hands in the air drawn on his side.

CLXIII Sloping slightly west

350 *l drs*[1]

By *drs*[1]

There are more recent hammer marks to the left of the text.

CLXVIII Horizontal

351 *l ḥnʾ*

By *ḥnʾ*

Adr 152 A drawing of a man standing on the back of an ibex ? and four ibex, one to the right and the others below. To the left of the inscription are two semi-circles with a line going through the middle and a tail.

CLXIX West

352 *w ḥb bn ḫrgt*

And *ḥb* son of *ḫrgt*

For texts of simple authorship with an introductory *w*, see Ch.4.A.3.

CLXXV Northwest

353 *l ms^{l}kt bn klb*

By *ms^{l}kt* son of *klb*

354 *l khl*

By *khl*

Adr 158 An animal and rider and, to the right, a loop.

CLXXVI Southeast

355 *[l t]m bn wgdt*

By *tm* son of *wgdt*

The rock is chipped before the *m* and only a slight stroke remains. *t* has been restored on the basis of the name *tm bn wgdt* in KJC 218.

356 *l mbʿl*

By *mbʿl*

The middle of the ʿ has chipped away although traces of the circle remain. *mbʿl* is not in HIn. See Index a for other occurrences at these sites.

CLXXXI Northwest

357 *l khl*

By *khl*

Site B

I West. See Pl. Va.

1 *w w ḏs²ry l s¹d ġny*

[] And [may] *ḏs²ry* [grant] to *s¹d* freedom from want

The author has begun the text with two *w*'s. The *s²* is similar to the form of the letter found in Safaitic. For this type of prayer, see Ch.4.C.3. *ġny* cf. Ar. *ġanāʾ* 'freedom from want'.

II Southeast

2 *l s²mrḫ*

By *s²mrḫ*

The initial *l* is partly obliterated by hammering although enough remains for the reading to be certain.

III West

3 *l zdqm bn tm*

By *zdqm* son of *tm*

zdqm is not in HIn. It is frequently attested elsewhere at these sites, see Index a.

4 *l ʿlṭ*

By *ʿlṭ*

The inscription is written down between the legs of a camel. The name is not in HIn. For other occurrences at these sites, see Index a.

Bdr 1 A camel probably drawn by *ʿlṭ* the author of KJB 4.

East

5 *l bn ʿtq*

By *bn ʿtq*

The name is not in HIn. For other occurrences at these sites, see Index a.

Bdr 2a (a) An ibex with long horns probably drawn by *bn ʿtq*.
(b) Below a camel and rider of whitish patina.

VI South southeast

6 *l ʿs²s² bn ʿlṭ bn (ʾ)mn*
By *ʿs²s²* son of *ʿlṭ* son of *(ʾ)mn*
There is a crack and chip in the rock over part of the twelfth letter. I have restored *ʾ* on the basis of *ʿlt bn ʾmn* occurring in KJB 7 on this rock. Neither *ʾs²s²* or *ʿlṭ* are in HIn, see Index a for other occurrences of the names and see Ch.5.C.2, genealogy 4. KJB 7 is probably by *ʾs²s²*'s brother and KJB 8 is possibly by the same man.

7 *l knn bn ʿlṭ bn ʾmn bn ftḥt bn ṭyq bn nṭt°*
By *knn* son of *ʿlṭ* son of *ʾmn* son of *ftḥt* son of *ṭyq* son of *nṭt°*
Below KJB 6. The text curves up and then down to the right. The *ʾ* of the third name was left out and then added later above the *n* of the preceding *bn*. One of the arms of the second *ṭ* is not attached to the rest of the letter. The last letter of the text is uncertain. *knn* is only previously attested in Qat. and Sab. The names *ʿlṭ*, *ṭyq* and *nṭt* are not in HIn. For other occurrences of the first two, see Index a and see Ch.5.C.2, genealogy 5. KJB 6 is probably by *knn*'s brother.

Bdr 5 Two loops joined together along the longer side. They are possibly a drawing of a pair of feet.

Southwest

8 *l ʾs²s² ḫṭṭ*
By *ʾs²s²* is [the] drawing
The name is not in HIn, see KJB 6. For this formula referring to drawings, see Ch.4.B.1.

9 *l lġfn*

By *lġfn*

The text particularly the last two letters is badly worn. The name is not in HIn.

Bdr 6 There are traces of drawings two animals ? and a clear drawing of an ibex. Some or all the drawings were inscribed by *ʾs²s²* the author of KJB 8.

IX Southeast

10 *l ʿrb b°*

By *ʿrb-*

The final letter is perhaps an unfinished *b*.

Bdr 10 A drawing of what is probably an ibex although the horns are short and partially covered by an abrasion. The hind feet are depicted as cloven. *ʿrb* the author of KJB 10 was probably the artist.

X Southeast

11 *l brn̊*

By *brn̊*

Part of the *r* has been hammered over. The inscription is written between the horns and body of an ibex.

Bdr 11 An ibex with a beard ? .

XII East

12 *l°tḥ*

By *tḥ*

The *l* is short and the *ḥ* is written with a vertical stance in a horizontal text. The interpretation is uncertain. It might be an unfinished text.

XIII Southeast

13 *wdd s¹m ʿnq̊ s¹rr f bql*

s¹m loved *ʿnq̊* happily and *bql*

Written down the rock. Several of the letters have been infilled and joined up. The letters of the first word are infilled and joined to the *d* by a line and both arms of the letter have been extended to join it to the following *m*. The arms of the *m* have been joined and the line might cover a *n*. There is rough line continuing to the rest of the text which is written to the right, possibly to avoid a hole in the rock. There is a line joining the *ʿ*, *n*, *q* and *s¹*. For love texts using *wdd*, see Ch.4.E.2. *s¹rr* in this context is an adverbial form cf. Ar. *surūr*^{an} 'happily' it occurs again in KJA 12. The attested meanings of the root bql if it was translated as a verb do not provide a suitable meaning in this context and I have interpreted it as a proper name and the particle *f* as a simple co-ordinate.

14 *ṣr*

ṣr

To the left of KJB 13. For texts of simple authorship without an initial particle, see Ch.4.A.4.

15 *l b ʿb*

By *b ʿb*

Below and to the left of KJB 14. The name is not in HIn.

Bdr 13 A camel of slightly lighter patina drawn in outline, and a camel and rider to the right of the beginning of KJB 13. Below is an unidentifiable stick animal ?.

Horizontal

16 *l (q)nm*

By *(q)nm*

Part of the circle of the *q* is roughly hammered. There appears to be a further *n* to the right of the text.

Southwest

17 *l ʾʿbdt bn s¹yr*

By *ʾʿbdt* son of *s¹yr*

On the right side, written down the rock and turning to the left. *ʾʿbdt* is not in HIn. For other occurrences of the name, see Index a. *ʾʿbdt bn s¹yr* occurs again in KJB 90.

18 *h lhm l bn ʿml*

O *lh* [grant ?] to *bn ʿml*

To the left of KJB 17. The text is written diagonally and then turns right. The end of KJB 19 is written under the first *m*. *bn ʿml* is not in HIn.

19 *l s²bt bn wtr*

By *s²bt* son of *wtr*

Written to the left and curving into he middle of KJB 18.

20 *l knn*

By *knn*

knn is only previously attested in Qat. and Sab. It is attested elsewhere at these sites, see Index a.

21 *l rmḫmlt*

By *rmḫmlt*

On the lower part of the rock. The initial *l* is rounded and less well-formed than the penultimate letter. The name is not in HIn.

22 *l mṭy bn grm bn zdʾl*

By *mṭy* son of *grm* son of *zdʾl*

The father's and grandfather's names are written some distance from *mṭy* possibly in order to avoid a crack in the rock.

23 *l zd(ʾ)l*

By *zd(ʾ)l*

Above and to the left of KJB 21-22. One of the forks of the *ʾ* has been obliterated by hammering.

24 *l m(ṭ)y*

By *m(ṯ)y*

The *ṯ* is thickly hammered with no distinctive middle arm. There is a hammered line joining it to the preceding *m*.

25 *l ṯ ʿlbn*

By *ṯ ʿlbn*

Written directly on from the end of KJB 24. The *ṯ* and *ʿ* are chipped but the reading is certain. The name is not in HIn. See Index a for other occurrences at these sites.

26 *l mtnʿ bn ʿbd*

By *mtnʿ* son of *ʿbd*

The text is written above and to the right of KJB 25.

Bdr 14 An ibex to the right of KJB 24.

XIV East

27 *l ʾ*

By *ʾ*

An unfinished text.

XVI Practically horizontal surface. The distance between some of the texts on this rock is not drawn to scale.

28 *(l) gḫf*

By *gḫf*

Part of the *l* is obliterated by hammering. It occurs frequently elsewhere at these sites, see Index a. The name occurs in again in KJB 47 on this rock.

29 *l s²rṣ°*

By *s²rṣ°*

30 *l lḫṯ bn ʾs¹lm*

By *lḫṯ* son of *ʾs¹lm*

To the right of KJB 29. *lḫṯ* is not in HIn. See Index a for other occurrences of *lḫṯ bn ʾs¹lm*.

31 *rb s²q s¹rr b ʿlṭ w mb ʿlʾ ʾl* --

ʿlṭ and *mn ʿlʾ* feel much desire of happiness towards --

See Ch.4.E.1. for love texts of this type. The names *ʿlṭ* and *mb ʿl* are not in HIn. See Index a for other occurrences at these sites and see KJB 38 and 41 on this rock.

32 *ṭṭwwd(d)ywbb*

?????

Above and to the left of KJB 31. The reading and interpretation of the text is uncertain. The letters *wd(d)* might be the verb 'he loved'.

33 *l s¹r(y) bn qn̊*

By *s¹r(y)* son of *qn̊*

To the left of KJB 32. The *y* is doubtful and if another line protruding from the circle is taken as intentional a *q* should be read. The *q* of the second name is carelessly executed but probably certain.

34 *l s¹yr̊*

By *s¹yr̊*

Written to the right of KJB 33. The *y* is doubtful as most of the tail runs into a crack in the rock. *s¹yr*, see KJA 70. The name occurs again in KJB 35 and 37 on this rock.

35 *l s¹yr*

By *s¹yr*

Written at right angles to the end of KJB 31. The name occurs again in KJB 37 on this rock. To the right of the end are faint traces of letters.

36 *l tmʾl*

By *tmʾl*

37 *l s¹yr*

By *s¹yr*

To the left of KJB 36. See KJB 35.

38 *l ʿlṭ*

By *ʿlṭ*

To the left of KJB 37. The name is not in HIn. See Index a for other occurrences at these sites. It occurs in the love text KJB 31 on this rock.

39 *l s¹nm*

By *s¹nm*

Slightly above KJB 38.

40 *l ʾmn*

By *ʾmn*

Below KJB 37.

41 *l mb ʿl*

By *mb ʿl*

The text is extremely faint but certain except for one line closing the circle of the *ʿ*. The name is not in HIn. See Index a for other occurrences at these sites. It occurs in the love text KJB 31 on this rock.

42 *lt l s¹lm*

lt [grant ?] to *s¹lm*

Written below KJB 40. The *m* is much shallower than the other letters of the text. For prayers of this type, Ch.4.C.3. The attested examples of these prayers usually have the particle *h* before the deity's name and *m* after it. The rock is worn before the *l* of *lt* and it is possible that part of the text has been lost.

43 *[l] s¹ḫ̊r bn̊ ḥmdt̊*

[By] *s¹ḫ̊r* son of *ḥmdt̊*

The text is written curving to the left, it is extremely faint. The *s¹* is on the edge of the rock and, most probably, at least an initial *l* was written on the part that has since broken away. The *b* of *bn* and the *d* of *ḥmdt* are very faint. There is a *l* to the left of the end of the text.

44 *l gḫfl bn -hʾ bn˚s¹hm̊lh*

By *gḫfl* son of *-hʾ* son of *s¹hm̊lh*

The text is written in three lines, one below the other. *gḫfl bn bhʾ* occurs elsewhere at these sites, see Index a, and perhaps a *b* should be restored as the eighth letter. The third name of the genealogy is very doubtful.

45 *l s¹ r̊ bn̊ rm-*

By *s¹ r̊* son of *rm-*

The text is uncertain there are traces of a further letter after the *m*.

46 *h ltm l m --- t̲b̊r*

O *lt* [grant ?] to *m* ---*t̲b̊r*

Below KJB 45. The rock is worn after the second *m* and no letters are distinguishable. The letters *t̲* and *b* at the end are doubtful although the *r* is certain. For prayers of this type, see Ch.4.C.3.

47 *l gḫf bn bhʾ bn ʾ[s¹]lm bn ms¹lm []*

By *gḫf* son of *bhʾ* son of *ʾ[s¹]lm* son of *ms¹lm []*

Below KJB 46. The second letter of the third name is obscured by hammering. I have restored a *s¹* on the basis of the genealogy occurring elsewhere. There is a gap between the third and fourth names because of a crack in the rock. The *s¹* of *ms¹lm* is written with a vertical stance in a horizontal text. Slightly above the final *m* there is a *y* which is shallower than the other letters and I have taken it as being extraneous. *gḫf* is not in HIn, see Index a and see Ch.5.C.2, genealogy 1. *gḫf* occurs as well in KJB 28 on this rock.

48 *l ẘr*

By *ẘr*

Above the end of KJB 47. The crossbar of the *w* is uncertain.

49 *l d*

By *d*

Below the end of KJB 47. This and the lines inscribed to the right are most probably unfinished texts.

50 *l nms¹*

By *nms¹*

On the right of the rock near KJB 44.

Bdr 15 There is a camel with a curled tail drawn below the end of KJB 30 and traces of the horns of an ibex to the right and below KJB 50.

Southeast

51 *l (ʿ)bn*

By *(ʿ)bn*

Written down the rock. The letters have been subsequently retraced with hammering and the first letter has the appearance of a *ṣ* although the original *l* shows through the superficial later hammering.

XVIII Sloping slightly west

52 *l s¹rr*

By *s¹rr*

The letters are carelessly written. The initial *l* is joined to the *s¹* by hammering.

XX Northeast

53 *l ḏf(r)n ḫṭṭ*

By *ḏf(r)n* is [the] drawing

The fourth letter looks more like a *b*, however, the name is written with clear *r*'s in KJC 45 and 648. The curves of the *f* are indistinct. From the position of the inscription *ḏfrn* is probably referring to the ibex above the end of the text although it is possible that he inscribed other drawings on the rock face as well. For this formula referring to drawings, see Ch.4.B.1. *ḏfrn* is not in HIn.

54 *l ʿlyn [ḫ]ṭṭ*

By *ʿlyn* is [the] drawing

The *ḫ* of *ḫṭṭ* has been left out. *ʿlyn* probably drew the ibex directly above the text. For this formula referring to drawings, see Ch.4.B.1.

Bdr 18 There are two series of drawings on the rock some of (a) a darkish patina and others of (b) a whitish patina.

(a) An ibex with some apparently intentional shapes above it, one of which is a bent line with two legs. Below and to the left is a stick ibex with a damaged head and an ostrich and another ibex. Above KJB 53 is an ibex drawn in outline with an arrow piercing its belly. There are two archers, one on the right side with an arrow (resembling a Hismaic *h*) flying from his bow, and another below KJB 53. The latter archer has what appears to be extra arms held out to the side as well as those used for holding the bow. Above KJB 54 is a drawing of a walking ibex. There are two crosses on the rock as well which might be *wusūm*. The composition is the joint work of *ḏfrn*, KJB 53, and *ʿlyn*, KJB 54 although it is uncertain which parts were drawn by them (the two ibex nearest the inscriptions were probably drawn by the respective authors) and I think it is quite likely, judging from the technique, the some drawings of the composition were done by other people.

(b) There is a stick horseman holding a spear and attacking a man on foot with a spear and shield. To the left and below there is a similar scene. To the right are three dogs, represented in a very static form, as attacking the earlier ibex.

XXI Northeast. See Pl. Vb.

55 *l gḫfl ḫṭṭ*

By *gḫfl* is [the] drawing

On the left side of the rock. The circles of the *g* have been filled in and the lines of the *f* and *ḫ* hammered over an thickened. The inscription begins between the legs of a camel and *ḫṭṭ* is written down on the left side. For this type of text referring to drawings, see Ch.4.B.1.

56 *l drs*[1]

By *drs*[1]

Above the camel drawn by the author of KJB 55.

57 *l gḫf bn bhʾ bn ʾs*[1]*lm*

By *gḫf* son of *bhʾ* son of *ʾs*[1]*lm*

Starting below KJB 56 and then curving to the left and then to the right. *gḥf* is not in HIn, for other occurrences of the name at these sites, see Index a and see Ch.5.C, genealogy 1.

58 *l s²ṣr bn ʾḫy*

By *s²ṣr* son of *ʾḫy*

Written down the rock to the right of KJB 56. See KJB 58a.

58a *w gml ḫṭṭ*

And *gml* is [the] inscriber

The text is written down directly on from KJB 58 which suggests it might be a continuation of that text. There are, however, clear unambiguous examples where one text is inscribed immediately after the end of another, see Ch.2.G, and it is more likely on the present evidence that these are two separate texts rather than one text for *s²ṣr* inscribed by *gml*.

59 *w l s²ṣr ḫṭṭ bkrt w gml*

And by *s²ṣr* is the drawing of a young female camel and a male camel

Written down the rock. *w gml* is written between the legs of the camel to which it refers. For texts referring to drawings introduced by *w l*, see KJB 61 on this rock and Ch.4.B.3.

60 *l ḏ ʾb*

By *ḏ ʾb*

Running down to the left of the end of KJB 59.

61 *w l drs¹°*

And by *drs¹°*

To the right of the beginning of KJB 59. The letters of the text have been joined up. The *w* is joined to the *l* by a line and the hook of the *l* has been extended to join it to the *d*. The loop of the *d* has been filled in and the letter is joined by a line to the *r*. One arm of the *r* is extended to join the last letter which might be a *h* or a *s¹* with an extended tail.

62 *l ʿlṭ bn ʾmn*

By *ʿlṭ* son of *ʾmn*

ʿlṭ is not in HIn. For other occurrences of the name, see Index a. KJB 64 and 65 on this rock are possibly by his sons.

63 *l ġ<u>t</u>lh w rb s¹qm bn ʿnʾl*

By *ġ<u>t</u>lh*; and much sickness, son of *ʿnʾl*

On the lower part of the rock. *bn ʿnʾl* is written above and to the right of the rest of the text and should either be read as extension of the genealogy after *ġ<u>t</u>lh* or at the end of the text. For instances where the genealogy is continued at the end of a text see, for example, KJA 44, KJA 198. *ġ<u>t</u>lh* is not in HIn. For this type of love text, see Ch.4.E.1.

64 *l ʾs²s² bn ʿlṭ*

By *ʾs²s²* son of *ʿlṭ*

Written down to the right of KJA 62. There is a camel to the left of the inscription. Neither of the names is in HIn. See Index a for other occurrences of *ʾs²s² bn ʿlṭ*. KJB 62 on this rock is possibly by *ʾs²s²*'s father and KJB 65 possibly by his brother.

65 *l knn bn ʿlṭ*

By *knn* son of *ʿlṭ*

On the right side of the rock. *knn* is only previously attested in Qat. and Sab. *ʿlṭ* is not in HIn. See Index a for other occurrences of both names. KJB 62 and 64 on this rock are possibly *knn*'s relations.

Bdr 19 On the left side of the rock is a camel drawn by the author of KJB 55. There are four other camels on the rock, the male one in the middle is mentioned in KJB 59. The camel to the left of KJB 61 has a rider represented simply by a circle with a rein or stick going to the head of the camel. One of the front legs of the animal has a loop which suggests the type of hobbling in which the leg is bent at the knee and tied back. The camel to the right has a rider and its feet are represented as circles. There appears to be a hobble tied to the front legs although this might be ill-directed hammering. Below KJB 62 are two ibex being chased by a stick dog. The lines between the legs of the ibex are misdirected hammering. The authors of KJB 58a and 59 use formulae referring to drawings but it is likely that authors of other texts inscribed some of them as well.

XXIV Southwest

66 *l tm bn bnlh*

By *tm* son of *bnlh*

Written down the rock. *tm bn bnlh* occurs elsewhere at these sites, see Index a.

Bdr 22 Below the inscription are drawings of a slightly lighter patina than the text. There is an ibex being attacked by a dog at a right angle to it. Below is a dog attacking an ibex and two archers, one with a sword at his waist, shooting bows. An arrow is depicted embedded between the shoulder blades of the ibex.

XXV North

67 *l qnm*

By *qnm*

XXX Southeast

68 *l zhmn*

By *zhmn*

69 *l ʾrs²(l)(h)*

By *ʾrs²(l)(h)*

Written diagonally to the right of the end of KJB 68. The stroke of the second *l* and most of the fork of the *h* is obliterated by hammering. *ʾrs²lh* is not in HIn. The name occurs frequently elsewhere at these sites, see Index a.

70 *l mġny bn hn h w ʿl*

By *mġny* son of *hn* is the ibex

The inscription is written in a cartouche part of which, like the text, is neatly inscribed whilst the rest is roughly hammered. *mġny bn hwn* occurs in KJB 117 and it is possible that this text is by the same man and the *w* has been left out in the last name. The ibex referred to is to the right of the text.

71 *l zdlh*

By *zdlh*

To the right of KJB 70.

Bdr 27 An ibex acknowledged by the author of KJB 70. Markings on the rump and the belly have been left in relief.

XXXIII South

72 *l ḏ ʾb ḫṭṭ*

By *ḏ ʾb* is [the] drawing

Written down and curving to the right between an archer and a dog. The final *ṭ* of *ḫṭṭ* is very small and two of the prongs run into each other. *ḏ ʾb*'s contribution to the composition might be the smaller dog and archer since KJB 74 mentions an ibex and a dog. For this formula used with drawings, see Ch.4.B.1.

73 *l s²ll bn ʾftḥ*

By *s²ll* son of *ʾftḥ*

Written down front the belly of one of the dogs.

74 *l s¹ ʿd ḫṭṭ w ʿl [w] klb*

By *s¹ ʿd* is the drawing of an ibex [and] a dog

Written down between the legs of an ibex. The second part of the text is written on the left side and curves into the second *ṭ* of the word *ḫṭṭ*. The conjunction *w* has been omitted between *w ʿl* and *klb*. For this type of text referring to drawings, see Ch.4.B.1.

Bdr 30 Two dogs chasing an ibex. Both dogs have very distinctive jaws and long tails curled at the ends. The ibex has its head turned back and a beard. On the left is a man standing and holding a bow and a short spear or an arrow. His chest has been left in relief. Above the drawing is a line with two legs. *s¹ ʿd* of KJB 74 claims the drawing of the ibex and a dog and *ḏ ʾb* the author of KJB 72 probably drew the archer and possibly the second dog. *s²ll* the author of KJB 73 might have partaken in inscribing the drawing as well.

XLIII East

75 *rʾlhhn*

????

The text is written inside a cartouche with a drawing. The letters are roughly formed and the meaning is unclear.

Bdr 39 A rough drawing of a horseman carrying a spear.

XLIV West southwest

76 *l nbṣlh*

By *nbṣlh*

Written vertically, starting between the legs of an ibex. The name is not in HIn. It is possible the third letter should be read as *r* and it and the following *ṣ* as a metathesis of *nṣrlh*, a name that occurs elsewhere at these sites, see KJC 27, 468, 525. Mistakes do occur in the inscriptions, see Ch.3.B.10.

Bdr 41 Southwest

77 *l ḫgg bn bglt*

By *ḫgg* son of *bglt*

bglt is not in HIn. *ḫgg bn bglt* occurs with an additional six generations in KJC 5.

L Northwest. See Pl. VIa.

78 *l ʾnʿm bn brd*

By *ʾnʿm* son of *brd*

On the top left hand corner of the rock. For other occurrences of *ʾnʿm bn brd* at these sites, see Index a. The names occur again on this rock in KJB 84 and 87. *ʾnʿm* by itself occurs in KJB 81.

79 *l drg*

By *drg*

To the right of KJB 78. There is a drawing of a camel below the inscription which was probably inscribed by *drg*.

80 *l q*

By *q*

An unfinished text, written to the right of KJA 80.

81 *l ʾn ʿm*

By *ʾn ʿm*

On the left of the lower part of the rock. See KJB 78.

82 *l ʿbd bn s¹yr bn s¹lm*

By *ʿbd* son of *s¹yr* son of *s¹lm*

Written diagonally below the end of KJA 82 and turning to the left. For occurrences of *ʿbd bn s¹yr*, see Index a.

83 *l brr*

By *brr*

To the right of KJB 82.

84 *l ʾn ʿm bn brd*

By *ʾn ʿm* son of *brd*

At the top of the group of inscriptions, to the right of KJB 81. The first name is written down the rock and the rest of the text upwards. See KJB 78.

85 *l ktbt bn ḥrm*

By *ktbt* son of *ḥrm*

Starting below KJB 84. *ktbt* is not in HIn. It occurs again in KJB 167.

86 *h ḏs²ry l m ʿz db ʿn*

O *ḏs²ry* [grant] *db ʿn* to *m ʿz*

To the right of KJB 85. For this type of prayer, see Ch.4.C.3.

87 *l ʾn ʿm bn brd*

By *ʾnʿm* son of *brd*

Written to the right of KJB 86. See KJB 78.

88 *l ḥdmr bn ʿbd zdqm*

By *ḥdmr* son of *ʿbd* son of *zdqm*

The text is written to the right of KJB 87 and curves down. *zdqm* is not in HIn. *ḥdmr* with the same genealogy and an additional generation occurs in KJC 188. See Ch.5.C.2, genealogy 3.

89 *l ṣhbt*

By *ṣhbt*

Written horizontally below KJB 88.

90 *l ʾʿbdt bn s¹yr ḫṭṭ*

By *ʾʿbdt* son of *s¹yr* is [the] drawing

The inscription is on the left side of the rock, it refers to a camel inscribed to the left of it. *ʾʿbdt* is not in HIn. See Index a for other occurrences at these sites. *ʾʿbdt bn s¹yr* occurs in KJB 17. See Ch.4.B.1. for this formula referring to drawings.

91 *h ḏs²ry l mġny*

O *ḏs²ry* [grant ?] to *mġny*

Starting to the right of KJB 90 and curving round. The stroke of the final *y* is facing in the direction of the text, possibly to avoid the *l* below. For this type of prayer, see Ch.4.C.3.

92 *l drs¹t bn kr*

By *drs¹t* son of *kr*

The first name and *bn kr* are both written down the rock, the latter to the left of the former. Neither of the names is in HIn. *drs¹t* occurs again in KJB 93 on this rock and *drs¹t bn krt* occurs in KJA 258.

93 *h ḏs²r l drs¹t*

O *ḏs²r* [grant ?] to *drs¹t*

Written down on the right side of the rock. For *drs¹t*, see KJB 92 and for this type of prayer, see Ch.4.C.3.

94 *l s²gʿ*

By *s²gʿ*

To the right of the middle of KJB 90.

95 *l ʿlṭ bn ʾmn bn ftḥt*

By *ʿlṭ* son of *ʾmn* son of *ftḥt*

To the right of KJB 94. *ʿlṭ* is not in HIn. For other occurrences of the name, see Index a and see Ch.5.C.2, genealogy 5.

96 *h ḏs²ry l tm*

O *ḏs²ry* [grant ?] to *tm*

To the right of KJB 95. The tail of the *h* runs into a *l* on the left which is probably a false start at an inscription. For this type of prayer, see Ch.4.C.3.

96a *h ḏs²*

O *ḏs²*

An unfinished text. The *ḏ* has only three prongs.

97 *l ʾ(s²)(s²)*

By *ʾ(s²)(s²)*

The top of the last two letters are obscured by a chip in the rock. The name is not in HIn. See Index a for other occurrences at these sites.

Bdr 46 Below KJB 79-80 is a camel. The head has been more recently hammered over.

Bdr 47 A camel to the left of KJB 90.

LI Northeast

98 *l bn ʿtq*

By *bn ʿtq*

The name is not in HIn. See Index a for other occurrences.

99 *l drs¹*

By *drs¹*

LIV Practically horizontal

100 *l s¹yr bn s¹lm*

By *s¹yr* son of *s¹lm*

For other occurrences of *s¹yr bn s¹lm*, see Index a.

LV Practically horizontal

101 *l s¹*

By *s¹*

An unfinished text, probably by the artist of Bdr 50.

Bdr 50 An ibex with only one horn.

LVI Practically horizontal, sloping slightly east.

102 *l hnʾ*

By *hnʾ*

LVIII North northwest

103 *l ʿyl*

By *ʿyl*

LIX On a loose boulder that was partially buried when found. Only KJB 104 was showing.

104 *h ḏs²ry l ms¹ʿd*

O *ḏs²ry* [grant ?] to *ms¹ʿd*

The text is written curving round. For this type of prayer, see Ch.4.C.3.

104a *l kr̊tm*

By *kr̊tm*

The *l* runs into the *k* which has a long upper arm and a short lower one joining the *r*. Borth this text and KJB 104 are partially surrounded by a cartouche which has a lighter patina than that of the inscriptions.

104b *(w)(h)(ḏ)*

And O *ḏ*

The text is written on the edge of the rock. Half of the circle of the first letter has been filled in. The tail of the *h* and the central prongs of the *ḏ* have been hammered. The text is unfinished.

The second face, lying face down when the boulder was found.

105 *l hnʾ bn zdqm*

By *hnʾ* son of *zdqm*

The text is written horizontally above a drawing of an ibex, dog and man. *zdqm* is not in HIn. For other occurrences of *hnʾ bn zdqm*, see Index z. It is possible that *hnʾ* and the author of KJB 106 are co-artists of the drawing.

106 *l grmt*

By *grmt*

The text is written diagonally down to the right of KJB 105.

Bdr An ibex with its head turned back (cf. XXXIII Bdr 30 from this site) and an arrow embedded at the top of one of its front legs. There is a dog chasing it to the right and a man holding a bow in one hand and a sword in the other. The drawing might have been inscribed by *hnʾ*, KJB 105, or *grmt*, KJB 106, or it might be a joint composition.

LIXa East

106a *l hn(ʾ)*

By *hn(ʾ)*

The top fork of the *ʾ* is ill-formed, being a series of hammer marks which are not joined to the rest of the letter and the bottom fork is at a right angle to the stroke.

LXI Northeast

107 *l s²brmt bn s¹mʿn bn qn*

By *s²brmt* son of *s¹mʿn* son of *qn*

The text is written round in a circle. *s²brmt* is not in HIn. The name occurs again by itself in KJC 554. See Ch.5.C.2, genealogy 4.

LXII East

108 *l ʿlb*

By *ʿlb*

LXIV Southeast

109 *l try*

By *try*

110 *l hnʾ bn zdqm bn ʾʿbd bn ʿkl bn s¹ry bn (k)nn bn bnʾmt bn ḏbʾ*

By *hnʾ* son of *zdqm* son of *ʾʿbd* son of *ʿkl* son of *s¹ry* son of *(k)nn* son of *bnʾmt* son of *ḏbʾ*

The text starts underneath KJB 109 and curls round. The tail of the *k* of *knn* has chipped away. The final *bn* and name has been lightly hammered on to the rock in a different technique to the rest of the letters of the inscription. Below the *s¹* of *s¹ry* is a *l* and below and to the right another *l*. The chip in the rock after the latter might obscure another text. *zdqm* and *bnʾmt* are not in HIn. For occurrences of *hnʾ bn zdqm*, see Index a and see Ch.5.C.2, genealogy 3.

LXV Horizontal

111 *l fḏg*

By *fḏg*

The hook of the *l* has been extended to join the *f* and another hook has been added to attach it at the other end. The *ḏ* is a circle with a dot in the middle and the circles of the *g* have been completely filled in.

LXVI North

112 *l fḫtn bn s¹ ʿd*

By *fḫtn* son of *s¹ ʿd*

The text is written down between two camels which were drawn by the author. *fḫtn* is not in HIn. See Index z for other occurrences of the name at these sites.

Bdr 55 Two camels drawn by the author of KJB 112.

LXVII Horizontal

113 *l f -*

By *f -*

There is a *s¹* or possibly a *l* after the *f* although the letter does not seem to be very deliberately formed and it is most likely that the line is an incomplete letter and the text is unfinished.

113a *l wḥ̈f*

By *wḥ̈f*

The back of the third letter is chipped and it is difficult to tell whether the letter has a tail and should be read as a *ḥ* or whether it is without a tail and to be read as a *ṯ*. *wḥ̈f* occurs in KJC 102 and 610 from these sites.

LXVIII Sloping southwest. See Pl. VIb.

114 *l ʾrs²lh*

By *ʾrs²lh*

On the left side of the rock. The name is not in HIn, see Index a for other occurrences at these sites.

115 *l qymt bn s¹ʿd*

By *qymt* son of *s¹ʿd*

The text is written along the top of the rock. The *s¹*, *ʿ* and *d* have been filled in. For other occurrences of *qymt bn s¹ʿd*, see Index a.

115a *l* -

By -

Below the beginning of KJB 115. The second letter which has a vertical back with one short and one much longer arm is unfinished.

116 *l mġny bn hwn h bkrt*

By *mġny* son of *hwn* is the young female camel

Written down and then turning to the right. There is a camel above, to which the inscription refers. *hwn* is not in HIn. *mġny bn hn* occurs in KJB 70.

117 *l ʾnf*

By *ʾnf*

Below the beginning of KJB 116.

118 *l fẖn*

By *fẖn*

The *f* has been joined on to the *l*. There is a straight line above and to the left of the text. *fẖn* is not in HIn. It is possible that the name was intended to be *fẖtn* which occurs in KJB 112 on Rock LXVI nearby and, either the text is unfinished and the last letter here is an incomplete *t* or, the *t* was left out.

119 *l rks¹*

By *rks¹*

The text is written above KJB 116.

119a *l h*

By *h*

Written below the hind leg of the camel. The text is unfinished.

120 *l* -

By -

Near the bottom of the rock. The text is unfinished.

121 *l ʿlyn bn qnt*

By *ʿlyn* son of *qnt*

Written down to the right of the camel.

122 *l grf*

By *grf*

123 *l ġrṭm*

By *ġrṭm*

On the bottom right hand side of the rock. The name is not in HIn. See Index a for other occurrences.

Bdr 55 *bis* A camel referred to by the author of KJB 116.

LXIX Southeast

124 *l bhʾ*

By *bhʾ*

There is a line to the right of the text.

LXX Southwest

125 *l ʾrs²lh*

By *ʾrs²lh*

The name is not in HIn. See Index a for other occurrences at these sites.

LXXI West

126 *l rks¹*

By *rks*[1]

Written down from the belly of an ibex.

Bdr 55 *ter* An ibex drawn by *rks*[1] the author of KJB 126. The horns have been somewhat eccentrically placed.

LXXIII West

127 *[n](y)(k) rḏ qyml f*

rḏ had sex with *qyml* and

On the left side of the rock. The reading is doubtful and the interpretation uncertain. The first four letters are either completely or partially covered by a recent drawing of a stick animal. The *y* has been left out of the second name and added afterwards to one side. If the above interpretation is correct the text is unfinished. For this type of love inscription, see Ch.4.E.2.

128 *--ḏh*

--ḏh

To the right of KJB 127. Only the *ḏ* and *h* are clear as the rest of the letters are covered by the front legs of the stick animal. There is possibly a *s*[1] to the left of the text.

129 *nyk ng[](ʾ)t mr ʾt*

ng[](ʾ)t had sex repeatedly with a woman

To the right of KJB 128. The author has made a mistake after the *g* and hammered out the letter. The *ʾ* and *t* at the end are written to the right to avoid a slight hole in the rock. *ng ʾt* occurs in KJB 142 on this rock. For texts using *nyk*, see Ch.4.E.2. For *mr ʾt*, cf. Ar. *marʾah* 'a woman'.

130 *l km bn ʾns*[2]

By *km* son of *ʾns*[2]

Written below KJB 127-129.

131 *l ms*[1] *ʿd*

By *ms*[1] *ʿd*

To the right of KJB 127-129, curving down.

132 *l qrs² bn krt n(b) ftḥt*

By *qrs²* son of *krt* (son of) *ftḥt*

The *b* of the second *bn* is a shallow curve facing in the opposite direction to that of the rest of the text and the *n* has been written before it. It is strange that a mistake should have been made with a word as common as *bn* but if he did write the *n* first that would explain the direction of the curve of the *b* which faces in the right way for that word although it is wrong for the rest of the text. *qrs²* is not in HIn. *krt bn ftḥt* occurs in KJA 11 and KJC 307.

133 *l mqmʾl bn s¹r*

By *mqmʾl* son of *s¹r*

Below the end of KJB 132.

134 *l s¹ʿd*

By *s¹ʿd*

To the right of KJB 132.

135 *l khl bn s¹ny*

By *khl* son of *s¹ny*

See Pl.VIIa.

For other occurrences of *khl bn s¹ny*, see Index a.

136 *rbt s¹q[m] w s²q b dʿm w dʿt lt fḏg w gḫfl w dʿm ḫṭṭ*

dʿm feels much sick[ness] and desire, and may *lt* call *fḏg* and *gḫfl*, and *dʿm* is [the] inscriber

See Pl.VIIa.

The text is written in a zig-zag, down the rock and then curling up and back down. The *m* has been omitted from *s¹qm*. For this type of love inscription, see Ch.4.E.1 and for the prayer, see Ch.4.C.2.

137 *--k°bn ʿlfn b[n] s¹m*

*--k°*son of *ʿlfn* son of *s¹m*

See Pl.VIIa for part of the text.

Starting above and to the right of KJB 136. Some of the letters are badly formed and lines have been hammered joining them up. The first three letters are not very definitely inscribed and are uncertain although the third might be a *k*. *ʿlfn* is not in HIn.

138 *h ḏs²ry l ʾḥls¹ ʾḥlk dn s¹qm w dn ʿyt w dn bʾs¹ w ḫblth*

O *ḏs²ry* [grant] *ʾḥlk* to *ʾḥls¹* without sickness and without impotence and without distress and she has driven him insane

See Pl.VIIb.

The text is written clockwise in a loop above KJB 137. Neither *ʾḥls¹* or *ʾḥlk* are in HIn although the latter is quoted under *ḥlk* (HIn: 198). For other occurrences of *ʾḥls¹*, see Index a. *ʾḥlk* is the subject of the verb at the end and the name must be feminine, see the Index of names. For this type of prayer, see Ch.4.C.3. For *dn*, cf. Ar. *dūna* with the meaning 'without' (Wright II: 185B); *s¹qm*, cf. Ar. *suqm*, 'sickness'; *ʿyt* 'impotence' cf. Ar. *ʿayya* 'he lacked power, strength or ability'; *bʾs¹*, cf. Ar. *buʾs* and *baʾs* 'distress, misfortune' the word is attested in other contexts in Saf. (see, for example, WH 180, 895). *ḫbl*, cf. Ar. *ḫabalahu* 'it rendered him insane', the verb is in the third person feminine perfect and the object expressed by the pronominal suffix *-h*. *ḏs²ry* is asked to 'grant' a person in KJB 86 and there is another invocation to *ḏs²ry* in an amorous context in KJA 20.

139 *l hnʾ*

By *hnʾ*

See Pl.VIIb.

The text is written inside KJB 138.

140 *l brd*

By *brd*

See Pl.VIIb.

Written inside KJB 138 next to KJB 139.

141 *l ʾs¹ bn ḏ-*

By *ʾs¹* son of *ḏ-*

Written downwards beneath KJB 139. There is a dash after the *ḏ* which is probably the line of an unfinished letter.

142 *l ngʾt*

By *ngʾt*

Written down to the left of KJB 141. The name occurs in the love inscription, KJB 129, on this rock.

143 *l grmt bn qnlh*

By *grmt* son of *qnlh*

Written horizontally below KJB 141 and 142. *qnlh* is not in HIn, see the Index of names and Index a for other occurrences at these sites.

144 *(l) (ʾ)nʿm bn brd*

By *(ʾ)nʿm* son of *brd*

Written down the rock. Part of the *l* and *ʾ* are covered by hammering. There is a possible *l* and *b* to the right of the end of the inscription. For occurrences of *ʾnʿm bn brd* see Index a.

145 *w s¹ʿd ḫṭṭ*

And *s¹ʿd* is [the] inscriber

There is a camel to the right of the inscription. For this formula referring to drawings, see Ch.4.B.2.

146 *l bn ʿm(h)*

By *bn ʿm(h)*

To the right and above of KJB 145. There is a chip over the top of the last letter. It might cover the fork of a *h* or perhaps a *l* should be read. *bn ʿmh* and *bn ʿml* are attested elsewhere at these sites, see Index a. *bn ʿmh* is not in HIn.

147 *l ns²l*

By *ns²l*

Written down between the legs of a camel.

148 *w ḏʾb bn s¹mʿn ḫṭṭ*

And *ḏʾb* son of *s¹mʿn* is [the] inscriber

The text is written down the side of the camel's neck, round underneath the animal and then up to the left of its hind leg. The *ṯ*'s at the end are written in the opposite direction to the rest of the text. For other occurrences of *ḏ ʾb bn s¹m ʿn*, see Index a. The names occur again in KJB 156 on this rock. For this formula used with drawings, see Ch.4.B.2.

149 *l gml*

By *gml*

Written to the right of KJB 148, above a drawing of a camel.

150 *w drs¹*

And *drs¹*

The text is written down to the right of a camel with a rider seated at the rear. For texts with an initial *w*, see Ch.4.A.3.

151 *l ʾs²ṣr*

By *ʾs²ṣr*

The text is written above KJB 149. The circle and fork of the *ṣ* have been filled. There is a *l* after the end of the inscription. The name is not in HIn. *ʾs²ṣr bn zdqm* occurs in KJB 155 on this rock.

152 *l ʿn*

By *ʿn*

Below and to the right of KJC 151. The inscription is slightly above a drawing of a camel which was possibly inscribed by the author.

153 *l ḥn*

By *ḥn*

To the right of KJB 150 and below KJB 152.

154 *bhn*

bhn

Written below KJB 150. The first letter looks like a *b* although the right hand arm is rather thin and might be misdirected hammering and perhaps it should be emended to *l* and

the text read as *l hn*. *bhn* is not in HIn. For texts of simple authorship without an introductory particle, see Ch.4.A.4.

155 *w ʾs²ṣr bn zdqm ḫṭṭ*

And *ʾs²ṣr* son of *zdqm* is [the] inscriber

Above KJB 152. The inscription starts between the legs of a camel and then turns left. *ḫṭṭ* is written vertically up the rock in front of the camel. The names *ʾs²ṣr* and *zdqm* are not in HIn. For other occurrences of *ʾs²ṣr bn zdqm*, see Index a. The name *ʾs²ṣr* by itself occurs in KJB 151 on this rock. For this formula used with drawings, see Ch.4.B.2.

156 *l ḏ ʾb bn s¹m ʿn bn qn bn ms¹kt*

By *ḏ ʾb* son of *s¹m ʿn* son of *qn* son of *ms¹kt*

To the right of KJB 153. The first name is written to the left of the rest of the text. For the genealogy see Index a and Ch.5.C.2, genealogy 4. *ḏ ʾb bn s¹m ʿn* occurs on this rock in KJB 148. There is a line with four, possibly five prongs to the left of the text. It is perhaps an incomplete attempt at a *ḏ*.

Bdr 56 (a) A stick horse and rider of whitish patina.

(b) A camel drawn by *s¹ ʿd*, author of KJB 145.

(c) A camel with a rider who is holding a sword ? and reins. The pommel and cantle of the saddle are clearly depicted and a T-shaped stick (cf. Bdr 56e) is shown attached to the camel behind the saddle. There is a man standing behind the camel holding a short knife. There is another camel to the right with reins that seem to be tied to the saddle whilst the rider is sitting behind the hump. He is holding a sword ? and carrying a small shield. *ḏ ʾb*, KJB 148, says he is the inscriber but *ns²l*, the author of KJB 147, and *gml* and *drs¹*, the authors of KJB 149 and 150, might be co-artists.

(d) A somewhat elongated camel with its front legs hobbled.

(e) A man leading a camel. A T-shaped stick (cf. Bdr 56c) and a saddle are clearly depicted. The author of KJB 155 *ʾs²ṣr*, says he is the inscriber.

LXXIV South

157 *l hgn*

By *hgn*

LXXV North

158 *l dʿm bn ṣḥb bn ʾs¹lm bn ms¹lm*

By *dʿm* son of *ṣḥb* son of *ʾs¹lm* son of *ms¹lm*

The text is written down the rock with the final *m* turning to the left. For other occurrences of *dʿm bn ṣḥb*, see Index a.

LXXVI South

159 *l ʿlṭ*

By *ʿlṭ*

The name is not in HIn. See Index a for other occurrences at these sites.

Bdr 60 A small camel drawn by *ʿlṭ* the author of KJB 159.

LXXVII Northeast

160 *l (q)(ʿ)t*

By *(q)(ʿ)t*

The reading is uncertain. Parts of all the letters are covered by chipping.

161 *l s¹rqt*

By *s¹rqt*

LXXXII West

162 *l bgl*

By *bgl*

163 *l s¹ʾr*

By *s¹ʾr*

164 *l ṣ(h)b*

By *ṣ(h)b*

Part of the *ṣ* and the tail of *h* is covered by a chip.

LXXXIII Southwest

165 *l ʿlṭ*

By *ʿlṭ*

The name is not in HIn. For other occurrences at these sites, see Index a.

XC Northeast

166 *l ʾs¹lh*

By *ʾs¹lh*

167 *l ktbt*

By *ktbt*

The name is not in HIn. It occurs as well in KJB 85.

168 *l rgf*

By *rgf*

One of the circles of the *g* has been filled in. the third letter is damaged. There is a faint curve showing at one end and perhaps *f* should be read.

XCI Practically horizontal, sloping slightly northeast

169 *l tm bn bnlh*

By *tm* son of *bnlh*

The first three letters are written horizontally and the rest of the text vertically. The *m* is written inwards towards the initial *l*. For other occurrences of *tm bn bnlh*, see Index a.

XCII Northwest

170 *l ʿrs¹*

By *ʿrs¹*

C Southwest

171 *l ʿwḏ*

By *ʿwḏ*

On the left.

172 *l ftḥ bn gḥfl*

By *ftḥ* son of *gḥfl*

Written curving down the rock. The *f* and *l* of the second name is written to the left of the second *ḥ* probably so the end of the text does not run into a crack below. Underneath the two texts on this rock is a *r* facing horizontally and a *b* facing vertically (they are not on the facsimile). *ftḥ* is not in HIn. *ftḥ bn gḥfl* with additional generations occurs in KJA 17.

CI North

173 *(l) (h)n[ʾ] bn zdqm*

(By) *(h)n[ʾ]* son of *zdqm*

The first name is almost totally obscured by chipping. There is a short line visible at the beginning, the remains of a fork of the next letter and a *n* which is certain. *zdqm* is not in HIn. For other occurrences of *hnʾ bn zdqm*, see Index a and KJB 177 on this rock.

174 *l ḏʾb bn sˡmʿn bn qn*

By *ḏʾb* son of *sˡmʿn* son of *qn*

The *ḏ* is slightly damaged. For other instances of *ḏʾb bn sˡmʿn*, see Index a and see Ch.5.C.2, genealogy 4.

175 *l sˡʿd bn ngʾ*

By *sˡʿd* son of *ngʾ*

The rock is damaged after the *ʾ*.

176 *l ʿlṭt*

By *ʿlṭt*

177 *l hnʾ bn zdqm*

By *hnʾ* son of *zdqm*

zdqm is not in HIn. See KJB 173 on this rock.

CII South southeast

178 *l ts¹q*

By *ts¹q*

The name is not in HIn. It is attested in KJA 25 as well.

CIII Horizontal

179 *nk qrfz wʾl bn s¹ʿdlh*

qrfz had sex with *wʾl* son of *s¹ʿdlh*

The first part of the text is written underneath from left to right and the second part above, right to left. The words *wʾl bn s¹ʿdlh* are written in a different technique to that of the beginning and it is quite possible they should be read separately although the larger letters of this part of the text might have been used to emphasize the name of the man who was the object of *qrfz*'s passion or the name could have been added later by someone less discreet than *qrfz*. If they are to be read separately then there are two possible interpretations of *wʾl bn s¹ʿdlh* (a) the text has no introductory particle, see Ch.4.A.4, and should be translated "*wʾl* son of *s¹ʿdlh*" or (b) the *w* is an introductory particle, see Ch.4.A.3, and the author's name is *ʾl*, in which case the text would read *wʾl bn s¹ʿdlh* "And *ʾl* son of *s¹ʿdlh*". The name *qrfz* is not listed in HIn although it is attested in several Tham.C texts published by Jaussen and Savignac 1909, see the Index of names. For love texts using *nk*, see Ch.4.E.2.

Bdr 80 A badly drawn ibex.

CIV West

180 *hmr(ʾ)*

hmr(ʾ)

There is no initial *l*. The name is not in HIn.

180a *l m(ʾ)y*

The name is not in HIn.

181 *l s¹yr ḫṭ(ṭ) kll*

By *s¹yr* is [the] drawing of all [of it]

The middle prong of the second *ṭ* is obscured. The text is written down in between a drawing of an ibex and the archers surrounding it. For this formula referring to drawings, see Ch.4.B.2.

Bdr 81 On the left is an ibex with the feet depicted as cloven. Above and to the right is a dog chasing an ibex. The body of the latter is almost completely destroyed by chipping. There are three archers shooting towards it. The drawing is acknowledged by *s¹yr* the author of KJB 181.

CVIII East

182 *l whb'[l]*

By *whb'[l]*

The rock is chipped after the *'* and probably a *l* should be restored and the name *whb'l* read. There is a *l* and crudely drawn *k* above and to the right.

CXII West

183 *l nkf*

By *nkf*

The *f* has rather deep curves, a similar form occurs in KJC 161.

Site C

VIII Northeast

1 *l ʿ l ʿ*

There is possibly a *l* and ʿ written horizontally from left to right and vertically downwards above the drawing Cdr 12.

Cdr 12 A man leading a camel.

XI Southwest

2 *l hnʾlh bn tmlḫwr bn whblh b°*

By *hnʾlh* son of *tmlḫwr* son of *whblh-*

There is a further letter, perhaps a *b*, at the end, after which the rock is chipped. *tmlḫwr* is not listed in HIn, although it occurs in TIJ 434 (King 1988: 313 n. 10). For the name, see the Index of names and Ch.5.A.1.

3 *(l) rmk bn rʾmlt*

By *rmk* son of *rʾmlt*

The first letter has a shallow fork giving it the appearance of a *h*. The first *m* and the *k* are partially covered by chips although the readings are clear. There is sufficient space after the *m* for a further letter but nothing is legible under the abrasion. Neither of the names are in HIn.

XII Southeast

4 *l fnd bn ʾḫʾb*

By *fnd* son of *ʾḫʾb*

Written on the left side of the rock. *fnd* is not in HIn. See Index a for other occurrences at these sites. *ʾḫʾb bn ʿnʾl* in KJC 282 and AMJ 114 might be *fnd*'s father.

5 *l ḫgg bn bglt bn zdlh bn hnʾlh bn wddʾl bn blqt bn bqqt bn s²hr*

By *ḥgg* son of *bglt* son of *zdlh* son of *hnʾlh* son of *wddʾl* son of *blqt* son of *bqqt* son of *s²hr*

The inscription is written in a cartouche and reads in a zig-zag down the rock, up and then down. *ḥgg bn bglt*, occurs in KJB 77 and AMJ 52. *bqqt* is not in HIn.

6 *l grmnt*

By *grmnt*

Written to the right of the cartouche with KJC 5. *grmt*, which also occurs in TIJ 210, is not in HIn, see the Index of names.

7 *l wʾl bn ḥḏr*

By *wʾl* son of *ḥḏr*

Written below KJC 6. There is a shallow line before the initial *l*.

XIIa Northeast

8 *l mlgn*

By *mlgn*

mlgn is not in HIn.

XIII Sloping slightly west

9 *l ms¹ʿd*

By *ms¹ʿd*

XIV Northeast

10 *l zḫrt*

By *zḫrt*

On a deeply embedded boulder of which the tip is showing near the ground. *zḫrt* is not in HIn.

XV Sloping east, almost horizontal

11 *l zdn*

By *zdn*

The initial *l* is directly hammered and written with a horizontal rather than a vertical stance as are the rest of the letters. *zdn* is not in HIn. It occurs elsewhere at these sites, see Index a.

There is no KJC 12

13 *l grm bn ḥrm b[n] ʾy˚bn zdʾl*

By *grm* son of *ḥrm* son of *ʾy˚*son of *zdʾl*

The first name is written diagonally above the rest of the text which reads from left to right and then loops round to the left. The letters from the first *bn* onwards have been joined up and some of the apertures of the letters are closed. The arms of the first *b*, the *ḥ*, *r* and second *b* are all joined by a line and there is a further line from the tail of the *ḥ* attaching it to the preceding *b*. There is a line joining the *m* to the following *b*. The *n* of the second *bn* is indistinguishable from the line joining the arms of the *b* which covers it. The third name is difficult to interpret. The first letter I have read as an *ʿ* although it could equally be a *r* (or *b*) with the arms joined by a line. The second letter might be a *h* with the fork joined or a *y*. The short tail suggests the latter is more probable. The *b* of the third *bn* is attached by two ligatures extending to the upper and lower crossbars of the *z* of the following name. The *d* is only joined to the *ʾ* by a small hammer mark. Borth forks of the *ʾ* are joined up and a line links it to the top of the final *l*.

XVI East

14 *l kʾt*

By *kʾt*

The name is not in HIn. It occurs elsewhere at these sites, see Index a.

XVIa Southwest

15 *l ks˚ʾ*

By *ks˚ʾ*

The letters of the text are crudely formed. The initial *l* has a slight tail in the opposite direction to the rest of the text. The second letter is probably a *k* with an arm of the letter extended rather than the spine.

XVII North. See Pl.VIIIa for KJC 18-31a.

16 *lʿḥm̊ʿ*

By *ḥm̊ʿ*

The inscription is crudely written and the letters doubtful. The *ḥ* is facing downwards and not in the direction of the text. The curves of the *m* are not joined at either end although there is a short line joining them in the middle, compare the *m* in KJC 40.

17 *l rġṯ*

By *rġṯ*

Above and to the right of KJC 16. The name is not in HIn.

18 *l ʿbd*

By *ʿbd*

Above and to the right of KJC 17.

19 *l bns²*

By *bns²*

Written in small letters next to KJC 18.

20 *l ʾnʿm bn brd*

By *ʾnʿm* son of *brd*

Below KJC 18 and 19. See Index a for the frequent occurrence of *ʾnʿm bn brd* at these sites.

21 *l ʾs¹mnt bn ḫrm*

By *ʾs¹mnt* son of *ḫrm*

The text runs in a loop below the end of KJC 20. For other occurrences of *ʾs¹mnt bn ḫrm*, see Index a. There are two *l*'s below the letters of the first name which are probably a false start of a text.

22 *l ʾʿ*

By *ʾʿ*

Below KJC 21. The text is probably unfinished.

23 *l ʿbd*

By *ʿbd*

The text reads vertically down, next to the end of KJC 20.

24 *l ḥb̆(y) bn yġṯ*

By *ḥb̆(y)* son of *yġṯ*

Written to the right of KJC 23. The text is crudely inscribed and there seems to have been a rough attempt at joining the letters of the first name and the *n* of *bn* to each other by running a line through the middle of them. The fourth letter which I have read as *y* has the circle completely filled in. The first letter of the patronym is written slightly to the left of the rest of the text and the *ṯ* has only one line to the grid.

25 *l ḥzbr bn ʿbd*

By *ḥzbr* son of *ʿbd*

The text runs in a loop down and then up the rock below the end of KJC 24. *ḥzbr* is not in HIn, see Index a.

26 *l mṣry*

By *mṣry*

The text is written near the top of the rock to the right of KJC 19. The name occurs in an uncertain Saf. text ISB 274a, see the Index of names. It is also attested in KJA 139 and KJC 713.

27 *l bnṣrlh*

By *bnṣrlh*

Written below KJC 26. The *l* at the beginning of the text is written in a different technique to the rest of the letters and is much longer than the other *l*.

28 *h ḏs²ry l ygq w nqtṣ*

O *ḏs²ry* [grant ?] to *ygq* and *nqtṣ*

The reading and translation are doubtful. The second *y* has a shorter tail than the first. The tenth letter which I have read as a *w* has been filled in as has the twelfth where a protruding central spoke suggests it should be read as *q*. This is the only example of this type of prayer where two people invoke *ḏs²ry* together, see Ch.4.C.3 for the formula. Neither of the names are in HIn. *nqtṣ* might be Greek, see the Index of names and Ch.5.B.3.

29 *l ʿrhz bn mhṣ bn ʾs¹y*

By *ʿrhz* son of *mhṣ* son of *ʾs¹y*

Written vertically down from the beginning of KJC 28. The third letter looks more like a *b* than a *r*, I have read *ʿrhz* on the basis of the name occurring elsewhere at these sites. *mhṣ* is not in HIn.

30 *w zdn ḫṭṭ kll*

And *zdn* is the inscriber of all [of it]

The inscription is written down from under the neck of a drawing camel to which it refers. The is *l* and a short straight line to the right of the inscription which is probably a false start at another text. *zdn* is not in HIn. For this formula used to express the authorship of drawings, see Ch.4.B.2.

31 *l hnʾlh*

By *hnʾlh*

The text is written down from the camel's legs.

31a *ʾʿs¹*

ʾʿs¹

Written diagonally down to the right of KJC 31. For instances of names without an initial particle, see Ch.4.A.4. The name is not in HIn.

Cdr 15 (a) A camel being held by a man. Patches have been left in relief along the neck and thighs of the camel and on the chest of the man. The man has one arm bent resting on his hip. The drawing was inscribed by *zdn*, author of KJC 30.

(b) A camel, dog and archer below and to the left of KJC 20 and 22. The hump and reins of the camel and the body of the archer have recently been hammered over. There is a line with a circle in the middle which I am unable to explain.

XVIII Southeast

32 *[l] gḥf*

[By] *gḥf*

The text starts at the top of the rock and runs vertically down. All the *l* except the hook is covered by an abrasion. The *f* is to the right of the *ḥ* and is partly obscured by hammering. The name is not in HIn, see Index a for other occurrences at these sites.

33 *l ʿlṭ*

By *ʿlṭ*

The text is written to the right of KJC 32. The name is not in HIn. It occurs frequently elsewhere at these sites, see Index a.

34 *l grf*

By *grf*

Written below and to the left of KJC 33. Part of the *l* and the top of the *f* are obscured by hammering.

35 *w°ʾʿbdt*

And *ʾʿbdt*

The text is written below Cdr 17, a drawing of an ibex. The *w* is uncertain as there is a chip and abrasion in the rock. The name is not in HIn. For names introduced by *w*, see Ch.4.A.3.

Cdr 17 An ibex being attacked by two dogs drawn by one or more of the authors on the rock.

XIX West

36 *lʾs¹lm bn ʾs¹*

By *ʾs¹lm* son of *ʾs¹*

XXIV East

37 *l ḫwtr̊fnzh*

By -------?

The letters of the text are crudely written and I do not know how to translate the text.

38 *l knn*

By *knn*

The text runs vertically down the rock from a leg of a camel. The name is only previously attested in Qat. and Sab., see Index a for other occurrences at these sites.

39 *w ftyt ḫṭṭ bkrt*

And *ftyt* is the inscriber of a young female camel

The inscription starts under the stomach of a camel and then turns left. For the formula referring to drawings, see Ch.4.B.2.

40 *w ḫm°*

And *ḫm°*

The *m* is very crudely written in the form of two lines parallel to one another and joined slightly at the top, middle and bottom (cf. KJC 16 etc.). Both this text and KJC 41 to the right are introduced by *w*, see Ch.4.A.3.

41 *w ʾyś¹*

And *ʾyś¹*

Written to the right of KJC 40. An abrasion covers part of the third letter. See Ch.4.A.3 for texts introduced by *w*.

Cdr 23 There are two camels which have been hammered over and subsequently added to. Part of the upper camel's hump has been left in relief. Below is an ibex and to the right a camel with a rider who is holding a rein and a stick to guide the animal. The animal's feet are represented as cloven. *ftyt* the author of KJC 39 refers to it as a young female camel.

XXVI East. See Pl.VIIIa.

42 *[l] (ʾ)fl ḏʾl gẙ (w) ḏkrt lt ʾh(l) kllh*

[By] *(ʾ)fl* of the tribe of *gẙ*; and may *lt* remember [the] family all of it

The initial *l* is almost completely covered by recent chipping and almost all the other letters are damaged to some degree, although mostly they can be restored with certainty. It is possible that there is another letter after the word *ʾhl* and a further one after the *h* of *kllh*. The tribal name is probably associated with the Nabataean toponym *gyʾ*, which is attested at these sites in the compound name *ʿbdlg* (KJC 205, 647) and, from *Wādī Ramm*, in *ʿbdg* (TIJ 136) (see Ch.5.A.1.b and 5.D). It occurs again in KJC 647 which, interestingly, is written by *ʿbdlg* who is possibly *ʾfl*'s father (see KJC 205). For prayers of this type, see Ch.4.C.1. *ʾhl*, Ar. *ʾahl*, 'family' is not attested elsewhere in Hismaic although prayers asking the deity to remember often refer to other social groups. *kll* Ar. *kull* 'all' occurs here with the suffixed third person singular pronoun *h*, cf. its use in KJC 641, CTSS 3 and MNM b 6.

XXVIII Almost horizontal, sloping slightly south southeast.

43 *l bg(t)*

By *bg(t)*

The last letter is a large hammered dot and possibly a *n* should be read. *bgt*, however, occurs frequently at these sites, see Index a, and in KJA 193 it is associated with a drawing of a feline similar in style to the one on this rock.

Cdr 26 (a) A feline with a long curled tail and claws drawn by *bgt* (cf. KJA 193 and Adr 79).

(b) To the left of the feline are two camels of a slightly lighter patina. One of them has a rider possibly carrying a spear.

XXX South

44 *w mlgnt ḫṭṭ*

And *mlgnt* is [the] inscriber

The hook of the *l* is covered by an abrasion. The inscription starts between the legs of the ibex of Cdr 27. The name *mlgnt* is not in HIn. For this formula accompanying drawings, see Ch.4.B.2.

Cdr 27 An animal, possibly an oryx, with long straight horns, heavy shoulders and an arrow embedded between its shoulders. There is a seluqi attacking it and an archer shooting at it. The latter has two lines drawn across the back of his arm. To the left is a schematic drawing of an ostrich ?, see Ch.6.B. The artist was *mlgnt* the author of KJC 44.

XXXI Northeast

Rock XXXI is a large boulder standing about 2 metres high. See Pl.IXa.

45 *rb s¹qm w s¹rr w ḫrṣ b ḏfrn*

ḏfrn feels much sickness and happiness and discomfort

The text is written down on the left side of the rock and then curves to the right. The structure of the text is well-attested, see Ch.4.E.1, but the word *ḫrṣ* only occurs here. *ḫariṣa* in Ar. means 'to conjecture, lie, be cold and hungry' and I have translated *ḫrṣ* from the last of these as expressing a feeling of discomfort. *ḏfrn* is not in HIn.

46 1) *w m ḥll ḏy rh*

2) *ht ʿs²w w rs¹l*

3) *s¹m ʿt ḏs²ry w ktby*

1) And whoever has encamped, whilst taking refuge, in the low-lying ground

2) Give an [offering of] an evening meal and milk

3) That *ḏs²ry* and *ktby* may hear

The inscription is written in three lines, one below the other and all reading from right to left. The letters are written with a vertical stance although the text reads horizontally and some of them have forms which are slightly difference from those found in the rest of the texts from these sites, cf. KJC 84 and see Ch.2.H.3.

After the introductory particle *w* one might expect a verb followed by a subject on the basis of other examples: *mḥl*, Ar. *maḥala* 'it was barren'; form II *maḥḥala* 'he strengthened'; form III *māḥala* 'he acted cunningly'. A problem, however, arises with the next two or three letter *lḍ* or *lḍy* for which I cannot find an attested root.

An alternative would be to read the first word as the substantive *mḥl* 'a halting place' Ar. *maḥal*, the second *l* as *li* indicating possession and *ḍyrh* as a proper name: *w mhl l ḍyrh* 'And the halting place belongs to *ḍyrh*'. Against this interpretation is that in examples where possession is expressed, the object possessed is usually placed after the preposition and the possessor (see, for instance, JS 67 *--w lh rgm*, KWM 15 *--w lh ṯyt*). The name *ḍyrh* would be new.

mḥll, on the other hand is attested as a name in Safaitic (HIn: 531) and *ḍyr* could be a form of the Ar. verb *ḍāra* 'it harmed', here with a person as the subject; *-h* would be the third person pronoun suffix: *w mḥll ḍrh* 'And *mḥll* harmed him'. The context of this interpretation would be unclear.

The second line of the text does not begin with a conjunction suggesting it is dependent on the first which would be the case if the latter is translated as a relative clause. *m* as the relative particle, Ar. *man*, occurs frequently in Safaitic as such (see, for instance, WH 40, 1679). *ḥll* Ar. *ḥalla* 'he alighted or settled' occurs in Safaitic (WH 54 etc.). Ar. *ḍawaya* means 'he took refuge' and here occurs as *ḍy*, the *maṣdar*, *dayy* used in a *ḥāl* clause (compare AMJ 5 in Appendix 2 which reads at the end *--f byt w ḍy*). *rh*, Ar. *rahw* 'a depressed place where water collects' also has the contrary meaning 'elevated place' but the position of the rock within a wadi near the main watercourse suggests that the former translation should be adopted. *rh* would be an object dependent on *ḥll* rather than *ḍy*.

In line 2 I have translated *ht* from Ar. *hāti*, *āti* (Wright I: 36 rem.d) 'give'. The Ar. root *ʿšw* has the general meaning of feeding or undertaking something in the evening, *ʿašaʾ* is 'an evening meal' and *ʿišw* 'a bowl of milk drunk when the sheep or goats return in the afternoon or evening' and the word should perhaps be glossed as 'an offering of evening food'. *rsʾl* might be derived from Ar. *risl* 'milk'. The text ends with an invocation which occurs elsewhere, see Ch.4.C.4. In the other texts the prayer occurs at the beginning or stands alone and possibly expresses the purpose of 'giving' or 'offering' the evening meal and milk.

47 *h lhm l ḥbbʾl*

O *lh* [grant ?] to *ḥbbʾl*

Written diagonally down to the right of the end of KJC 45. For the form of the vocative and this type of prayer, see Ch.3.C.8 and Ch.4.C.3.

Cdr 28 (a) Three ibex and a dog drawn in outline. Above them are two men standing together and below an archer and a man with his hands in the air. On the right is perhaps an unfinished attempt at two stick men.

(b) On the left side is an archer of whitish patina.

XXXI Northwest

47a *l dʿbt bn km*

By *dʿbt* son of *km*

The inscription is written in a curve. The name *dʿbt* is not in HIn.

47b *rʾh*

rʾh

To the left of KJC 48. The first letter is doubtful as it might be a *b* or a *l* with an exaggerated hook. See the Index of names for other occurrences of the name. For texts without an introductory particle, Ch.4.A.4.

XXXIII North

48 *w grf ḫṭṭ bkrt w frs*[1]

And *grf* is the inscriber of a young female camel and a horse

The inscription is written round the young female camel mentioned in the text. See Ch.4.B.2, for this formula and KJA 113. Someone called *grf* has also signed the drawing of an ibex on the lower part of this rock and that of a young male camel on Rock XXXVII (Cdr 32).

49 *l ʿlṭ*

By *ʿlṭ*

Written to the right of KJC 48. The name is not in HIn. See Index a for other occurrences at these sites.

50 On the left hand side of the lower part of the rock there is a *l* and two circles which are possibly a false start at writing *g*, they were inscribed but the line joining them was never added.

50a *l gḫfl bn bhʾ*

By *gḫfl* son of *bhʾ*

The text is written vertically down the rock. See Index a for other occurrences of *gḫfl bn bhʾ*.

51 *w grf ḫṭṭ w ʿl*

And *grf* is the inscriber of an ibex

Written to the right of KJC 50. See KJC 48. For this type of inscription referring to drawings, see Ch.4.B.2.

Cdr 30 (a) A camel with a rider holding a rein in one hand and a stick ? in the other. Neither of the lines are attached to the camel's head but extend to its neck. One foot of the camel is a circle left in relief. To the right is a horseman being led by a man. The body of the horse is heavy and the animal has cloven feet. The tail is drawn as a single line with hairs at the end. *grf* the author of KJC 48 refers to a female young camel and a horse. There is a line with two arms below KJC 49, see Ch.6.B.

(b) An archer and two ibex. The larger one has an arrow embedded in its back. To the left is a straight line and two legs. The drawing is acknowledged by *grf*, the author of KJC 51, but *gḫfl*, KJC 50a, might have inscribed part of it as well.

XXXIV South

52 *l (k) ʿm°*

By *(k) ʿm°*

The letters are badly formed, the second has a slight tail and an extended arm, I have read it as a *k*. The inner loop of the *m* is not completed and there is a line going across the middle.

XXXV East

53 *l ʾn ʿm*

By *ʾn ʿm*

54 *l ʿlṭ*

By *ʿlṭ*

The name is not in HIn, see Index a for other occurrences at these sites.

55 *l ʾsʿmnt bn ḥ[r]m°*

By *ʾsʿmnt* son of *ḥ[r]m°*

Part of the *ḥ* of the second name has been hammered over and only a curve of the *m* is protruding from the leg of the camel. The middle letter of the last name is completely obscured by a recent drawing of a camel. I have restored a *r* on the basis of the name occurring elsewhere, see Index a.

56 *w [g]ḥfʿ°[ḫ]ṭ[ṭ]*

And *[g]ḥfʿ°* is [the] inscriber

The text reads in a curve and is mostly obscured by recent drawings. The *g* is not visible at all and is restored on the basis of the name occurring elsewhere. One part of the zig-zag of the *f* is visible and a section of the *l*. The *ḫ* of *ḫṭṭ* is not legible and most of the final *ṭ* is obscured although a line can be seen down the side of one of the camel's front legs. The author is probably referring to drawings of two camels and riders and an indistinct drawing of a horseman and rider. For the formula, see Ch.4.B.2.

Cdr 31 (a) Two camels with riders and a horseman ? of a dark patina, probably drawn by the author of KJC 56.

(b) Two camels and a horse of a whitish patina.

XXXVa Southeast

57 *l ʿhn*

By *ʿhn*

The text is written vertically down the rock, the letters are lightly hammered and not very carefully formed.

XXXVI Southwest

58 *l mh(ṣ)*

By *mh(ṣ)*

The fork of the *ṣ* has chipped away and I have restored the letter on the basis of the name occurring elsewhere, see Index a. The name is not in HIn. This was originally read with KJC 58a as one text but the latter is inscribed in slightly rougher and thicker lines which suggests it is a separate text.

58a *l t*

By *t*

The text runs down from the end of KJC 58a. The rock is slightly chipped after the *t* but there are no traces of letters and the text is probably unfinished.

59 *l sʾl*

By *sʾl*

To the right of KJC 58. The name does not occur elsewhere at these sites.

XXXVII Southwest

60 *w grf ḫṭṭ bkr*

And *grf* is [the] inscriber of a young male camel.

The text is written round the rear side of a camel and rider. For this formula, see Ch.4.B.2.

61 *l gḫr-*

By *gḫr-*

The rock is chipped after the *r* and there are traces of a letter or letters.

Cdr 32 A camel which is mentioned in KJC 60. The rider of the camel was added later. To the left is a drawing of a slightly lighter patina of a man with his hands in the air.

XXXVIII West

62 *l whb*

By *whb*

63 *l rksʾ*

By *rks*[1]

The name occurs frequently at these sites.

Cdr 34 To the right of KJC 62-63 is a drawing of two archers facing each other. There is another archer further over on the right. Below a ridge in the rock is a directly hammered camel and rider.

XL South

64 ---

Most probably not an inscription although shapes similar to Hismaic *y*, *r* and *t* are distinguishable. There is a *l* and a *r* below and to the right which is probably an unfinished text.

XLII Northwest

65 There are several letters written on the rock - a *ḥ*, *ṭ*, *g* and *l ḥ* which is possibly the beginning of an inscription.

Cdr 38 A camel and an ibex

XLIV Northeast

66 *l ʿrs*[1]

By *ʿrs*[1]

There is a directly hammered 'horse-shoe' shape to the left of the inscription.

XLV East northeast

67 *rb s*[2]*q b -l̊- l -bb̊*

-l̊- feels much desire for *-bb̊*

For this type of love text, see Ch.4.E.1. The arms of the *r* are extended and attached to the back of the *b* and the arms of the *b* have been lengthened to join the *s*[2]. The centre of the *q* has been completely filled in. The first and last letters of the name after the preposition *b* have also been hammered in and are illegible. The following *l* is most probably the preposition *li*

'for' which also occurs after the expression *rbt s¹qm b* N in KJA 232. The first letter of the following word is covered by an abrasion but two *b*'s are legible at the end. The word is probably a name or perhaps *ḥ* should be restored in the place of the chip and the substantive *ḥbb* 'a loved one', Ar. *ḥabīb*, read which would fit the context well.

68 *l lṯ*

By *lṯ*

Written near the beginning of KJC 67.

69 *l grf*

By *grf*

To the right and slightly above KJC 68.

70 *l ʿṭl*

By *ʿṭl*

Below KJC 69. The last letter is slightly obscured by hammering and is doubtful.

71 *l grf bn bh(ʾ)*

By *grf* son of *bh(ʾ)*

The text is written above and to the right of KJC 70.

Cdr 40 (a) A loop.

(b) A damaged drawing of a stick animal of a light patina.

XLV East, vertical face

72 *l gḫfl*

By *gḫfl*

On the left side of the rock face. The final *l* is a small stroke and written with a horizontal stance although the text is written vertically down the rock.

73 *l ʾ(ṣ)lḥ*

By *ʾ(ṣ)lḥ*

To the right of KJC 72. The *ḥ* has been partially hammered over. The fork of the *ṯ* has been joined up by a line, cf. the ʾ in the third name of KJC 75.

74 *l mbʿl*

By *mbʿl*

To the right of KJC 73. The ʿ has been written within the arms of the *b*. The name occurs again in KJC 79 on this rock face. It is not in HIn, see Index a for other occurrences at these sites.

75 *l ġrṭm bn nht bn (ʾ)ġnt*

By *ġrṭm* son of *nht* son of *(ʾ)ġnt*

The text is written in a wavy horizontal line and then curves downwards. The upper fork of the ʾ in *ʾġnt* has a line drawn across it, cf. the ʾ in KJC 73. *ġrṭm* and *ʾġnt* are not in HIn. The same genealogy occurs in KJA 270 and with several additional generations in KJA 83. See Index a.

75a *l bn*

By *bn*

To the left of the last name of KJC 75.

76 *l rms¹ bn --*

By *rms¹* son of --

Starting below the *m* of KJC 75. The *bn* is written to the left of the *m*, possibly the author did not write his patronym because of the lack of space.

77 *l qnlh*

By *qnlh*

Written to the right of KJC 76. The name is not in HIn. See KJA 144.

77a *l ʿlṭ*

By *ʿlṭ*

The name is not in HIn, see Index a for other occurrences at these sites.

77b To the left are the letters *l* and *b* which are probably an unfinished text.

78 *l ʾn ʿm*

By *ʾn ʿm*

79 *rb s¹qm b mb ʿl*

mb ʿl feels much sickness

Written on the right side of the rock reading downwards. For this type of love text, see Ch.4.E.1. The name is not in HIn, for its frequent occurrence at these sites, see the Index a.

80 *l ʿrs¹*

By *ʿrs¹*

Running down from the end of KJC 75.

Cdr 41 An ibex.

XLVa East, next to and lying slightly under XLV

81 *l m-- bn bgt*

By *m--* son of *bgt*

The rock is chipped over most of the second and third letters of the first name. A small straight line is visible of the second letter and a circle remains of th third.

82 *l ʾs¹ bn bnng ʾt*

By *ʾs¹* son of *bnng ʾt*

To the right of KJC 81. The second name is not in HIn.

XLVI North

83 *lᵊḏ ʾbᵊkšᵊḫᵊ*

By *ḏ ʾb* --ḥ

The letters consist of shallow hammer marks and only *ḫ* at the end looks really intentional although the shapes of the other letters can be distinguished.

XLVIa West

84 *ḏ ʾbkbbḥh ʿmlrzḫdd*

I am uncertain how to translate this text. The script is Hismaic although some of the letters are written with unusual stances. Except for the *ʾ*, the first five letters, written horizontally, have a vertical stance and the *ḥ* and *h* in the rest of the inscription have a horizontal stance although the text is written vertically. The *h* has a shorter line for one of its forks and the *z* is written with comparatively long arms and a short crossbar. Similar *h*'s occur in KJC 46 the letters of which are also written with stances that do not follow the direction of the text, see Ch.2.H.3.

LI North

85 *ʾ-*

ʾ-

Written on the top right side of the rock.

86 *l hnʾ*

By *hnʾ*

To the right of KJC 85.

87 *l dʿm*

By *dʿm*

To the right of KJC 86.

88 *l hʿl ?*

l hʿl ?

Near the top of the rock, to the right of KJC 87. The final *l* is written below the other letters of the text. The combination of *ḥ* and *ʿ* does not occur in Ar. and it is most likely that the inscriber was practicing letters.

89 *l ʾsˡmnt bn ḫrm*

By *ʾsˡmnt* son of *ḫrm*

Written from right to left above a drawing of an ibex and a dog. *ʾs¹mnt* occurs in KJC 101 on this rock. For other occurrences of *ʾs¹mnt bn ḥrm*, see Index a.

90 *l ḥzbr*

By *ḥzbr*

Written down the rock in a slight curve. The name is not in HIn, see Index a for other occurrences at these sites.

91 *l ms¹ʿd*

By *ms¹ʿd*

Written to the right of KJC 90.

92 *w fḏg bn nġl*

And *fḏg* son of *nġl*

Starting to the left of KJC 91 and written round the back of a drawing. The name *fḏg* occurs by itself in KJC 105 on this rock. *nġl* is not in HIn. For names with an initial *w*, see Ch.4.A.3.

93 *w hnʾ ḫṭṭ*

And *hnʾ* is [the] inscriber

Below the end of KJC 89. The text starts between the legs of an ibex and runs down. *hnʾ* is probably referring to the ibex and perhaps others of the drawings. For this formula referring to drawings, see Ch.4.B.2.

94 *l s¹yr*

By *s¹yr*

To the right of KJC 93.

95 *l grf*

By *grf*

Running down to the left of KJC 89a. The name occurs again on this rock in KJC 103.

96 *w s¹ʿd ḫṭṭ*

And *sˡʿd* is [the] inscriber

The text is written vertically down the rock to the left of a drawing of an ibex and a camel to which *sˡʿd* is probably referring. For this formula, see Ch.4.B.2.

97 *l ḥzbr bn ʿbd*

By *ḥzbr* son of *ʿbd*

On the right side of the rock, starting after the end of KJC 92. The *r* and the *bn* have been hammered over but the outlines of the letters are still clearly visible. *ḥzbr* is not in HIn. It occurs alone in KJC 107. For other occurrences, see Index a.

97a *l l*

By *l*

Written below KJC 94-95. The text is unfinished.

97b *l bs̊z°*

By *bs̊z°*

Written below KJC 97a. The letters are ill-formed.

98 *l rm*

By *rm*

Written in the middle of the rock face. The *l* and the *r* run into the drawing of an ibex. There is a dot after the *m* but it is slightly lighter and probably extraneous.

99 *l ṣhbt*

By *ṣhbt*

Below and to the right of KJC 98. There is a slight gap between the beginning of the text and the last two letters. The name with an additional two generation occurs in KJC 118 on this rock.

100 *l brd*

By *brd*

Starting after the end of KJC 99.

101 *l ʾsˡmnt*

By *ʾs¹mnt*

Written to the right of the end of KJC 100. The name occurs with an additional two generations in KJC 89 on this rock.

102 *l wḥf*

By *wḥf*

On the left side of the rock, written horizontally. The name occurs elsewhere in KJB 113a and KJC 610.

103 *l grf*

By *grf*

Written to the right of the end of KJC 102. The name occurs in KJC 95 which is also on this rock and frequently elsewhere at these sites.

104 *l gḥfl*

By *gḥfl*

To the right of KJC 103.

105 *l fḍg*

By *fḍg*

To the right of KJC 104. See KJC 92 on this rock.

106 *l ʿrs¹*

By *ʿrs¹*

On the left side of the rock below the beginning of KJC 106.

107 *l ḥzbr bn ʿbd (bn) zdq[m]*

By *ḥzbr* son of *ʿbd* (son of) *zdq[m]*

To the right of KJC 106. The first name is written down the rock and the rest of the text to the left upwards and then to the right. The second *bn* has been hammered into a circle and the *m* has been left off at the end perhaps because of the lack of space. See Index a for other occurrences of the genealogy and see Ch.5.C.2, genealogy 3.

There is no KJC 108.

109 *l gḫf*

By *gḫf*

Written down to the right of KJC 107. The name is not in HIn, see Index a for other occurrences at these sites.

110 *wdd s²mrḫ ġlmt w nʿ[r]t ftnn*

s²mrḫ loved a young woman and a young girl, two seductresses

The text is written down the rock in a wavy line to the right of KJC 109. For love texts of this type, see Ch.4.E.2. I have restored the *r* on the basis of the word *nʿrt* occurring in KJC 539, cf. Heb. *nᵉʿara* 'a young girl'. I have translated *ftnn* as the dual of Ar. *fātin* 'seducer' although there is no agreement in gender with the preceding nouns. An alternative would be to divide the last four letters as *f tnn* and translate them as 'an so he remained', cf. Ar. *tanna*, 'stay or dwell'.

111 *l rfd bn ḏb bn -*

By *rfd* son of *ḏb* son of -

To the right of KJC 110. The *d* of the second name is covered by a chip and the rock is worn after the second *bn*.

112 *l qn*

By *qn*

Written to the right of KJC 111.

113 *l ʿlṭt*

By *ʿlṭt*

To the right of KJC 112.

114 *l ʾnʿm bn brd bn mtr bn ʾṯḫd*

By *ʾnʿm* son of *brd* son of *mtr* son of *ʾṯḫd*

On the left edge of the rock, written downwards. The names *mtr* and *ʾṯḫd* are not in HIn. For other texts with the same genealogy, se Index a and Ch.5.C.2, genealogy 2.

115 *s¹mʿt ḏs²[r]y l zdn w ʿ(ṣ)bh°h lt lʾlkn°*

That *ḏs²[r]y* may listen to *zdn* and bind ? him O *lt* ----

The text starts after KJC 107. Several of the letters are unclear and the rock is chipped and worn at the end. The *r* has been left out of the divine name *ḏs²ry*. Prayers using *s¹m ʿt* occur elsewhere, see Ch.4.C.4, but the rest of the inscription is difficult to interpret. A circle with a line attached are the only parts of the letter after the second *ʿ* which are visible. The length of the line suggests that it is not a *y* when compared to that letter in *ḏs²ry* which has only a short tail and perhaps the abrasion covers another circle at the end in which case the letter should be read *g* or perhaps the fork of a *ṣ* is obscured. Form II of the root *ʿjb*, Ar. *ʿajjaba* means 'cause to wonder' and the underlying meaning of the root *ʿṣb* is 'twist, wind' cf. Ar. *ʿaṣaba* 'he tied or bound'. The following *h* of which the fork is indistinct, is most probably the third person suffixed pronoun. The reading *h lt* 'O *lt*' is certain and since there is no conjunctive particle the deity must be the subject of the verb which would be the feminine imperative form. The word order however, is different from more certain examples in Saf., where imperative verbs occur after the deity's name (see Ch.4 n.43). The meaning of 'Cause him to wonder *O lt*' or 'Bind him *O lt*' is obscure. The final part of the text might be a prepositional phrase introduced by *l* Ar. *li* with the meaning 'to' or 'for' with a following proper name *ʾkln* (cf. *ʾkl* HIn: 62) or perhaps it should be interpreted as an initial *l* introducing another text *l ʾkln* 'By *ʾkln*'. For texts that are inscribed directly after another, see for example, KJC 99 and 100 on this rock and Ch.2.G.

116 *l qrs¹*

By *qrs¹*

To the right of the beginning of KJC 115. The name is not in HIn. See Index a for other occurrences at these sites. It occurs in KJC 117 on this rock as well.

117 *l qrs¹*

By *qrs¹*

Written to the right of KJC 116. See KJC 116.

118 *l ṣhbt bn mgʾ bn qnt*

By *ṣhbt* son of *mgʾ* son of *qnt*

On the left side to the right of KJC 114. *ṣhbt* occurs again in KJC 99 on this rock. *mgʾ* is not in HIn. See KJC 180 for an occurrence of *ṣhbt bn mgʾ*.

119 *l r ʿy*

By *r ʿy*

Written down on the right side of KJC 115.

120 *wdd mb ʿl glmt*

mb ʿl loved a young woman

On the left side of the rock, starting to the right of the second name of KJC 114. For love texts of this type, see Ch.4.E.2. The name *mb ʿl* is not in HIn, see Index a for other occurrences at these sites. For other love texts written by someone of that name, see KJA 188 and KJC 121a on this rock.

121 *l tm bn n--*

By *tm* son of *n--*

Starting to the right of the beginning of KJC 120. Only lines of the penultimate and final letters remain.

121a *rb s²q b mb ʿl*

mb ʿl feels much desire

On the left side of the rock. Written to the right of KJC 114. *mb ʿl* is not in HIn. See KJC 120, and for this kind of love text, see Ch.4.E.1.

121b *l l<u>t</u>*

By *l<u>t</u>*

Written slanting to the left and running into the ʿ of KJC 120. There is a further *l* inscribed below the initial *l* of the text.

Cdr 46 On the top right corner of the rock: Two camels and two ibex. One of the latter has an arrow embedded in its belly and both are being chased by dogs. Both *hn ʾ*, KJC 93, and *s¹ ʿd*, KJC 96, use formulae referring to drawings although it is possible that other authors partook in inscribing them as well. Next to and partly running into KJC 98 is an ibex which is damaged and not as well drawn as the animals above. There are the remains of a drawing to the right of KJC 99. To the right is a man with his arms in the air.

LIa Southwest

122 *l bẓ̊ẓ̊*

By *bẓ̊ẓ̊*

The second *ẓ* has a rather short vertical stroke. The name is not attested in HIn and only occurs in this inscription from these sites. To the right of the text is a pair of curved lines, possibly an unfinished drawing of the horns of an ibex, or a false start at an inscription.

LIIb Southeast

122a *l mg̊n*

By *mg̊n*

The letters are unusual shapes. The curves of the *m* are not joined at either end and there is virtually no line between the circles of the *t̲* giving it the appearance of the numeral 8. The name is not in HIn.

LIII East

123 *l ḥd̊d*

By *ḥd̊d*

The loop of the first *d* is facing towards the beginning of the text and that of the second towards the end.

124 *l ʿs¹n*

By *ʿs¹n*

125 *l s²ḥḥ bn ʿbd*

By *s²ḥḥ* son of *ʿbd*

There is a directly hammered *d* and *n* above the text. The name *s²ḥḥ* is not in HIn.

126 *l ʾmn bn s¹dn bn nḫy*

By *ʾmn* son of *s¹dn* son of *nḫy*

ʾmn bn s¹dn occurs in KJA 198. *nḫy* is not in HIn.

127 *l bnṣlh*

By *bnṣlh*

The text is written in much smaller letters than those of other inscriptions on the rock. The name is not in HIn.

128 *l brr mn ʾs¹mnt*

By *brr* son of *ʾs¹mnt*

The reading of *mn* rather than *bn* after *brr* is clear and seems to be an instance of *m* being used for *b*, an interchange which is attested in Nabataean (Cantineau 1930: 44), see Ch.3.A.6. See Index a for texts by *brr bn ʾs¹mnt*.

129 *l mbʿl*

By *mbʿl*

The name is not in HIn, see Index a for other occurrences at these sites.

Cdr 48 Below KJC 124 is an ibex and a drawing of white patina of a man with bent knees and one arm bent at the elbow and the other outstretched.

LV Northeast. See Pl.IXb.

130 *l m°*

By *m°*

On the top left hand of the rock. The ʿ is a carelessly drawn circle. The name is not in HIn but occurs in RyGT 2, see the Index of names.

131 *l ḥrs¹*

By *ḥrs¹*

To the right of KJC 130.

132 *l b--*

By *b--*

To the left and below KJC 130-131. The *b* and the last two letters of the text have been incorporated into a later drawing of an ibex.

133 *l yẓr*

By *yẓr*

To the right and below KJC 132.

134 *l ʾḫyʿbn gʿdʿ*

By *ʾḫyʿ*son of *gʿdʿ*

The text runs down from the last letter of KJC 133. The *y* of the first name and the *d* of the second are carelessly hammered and shaped.

135 *l zdnn*

By *zdnn*

To the right of KJC 134. The name is not in HIn.

136 *l s¹nm*

By *s¹nm*

To the right and above KJC 135.

137 *l mṭy*

By *mṭy*

The text is written above and to the right of KJC 136.

138 *s¹r zdhlh f ghďʿhř ʿ bǧʿḥt hʿs¹ḥ ʿn ḥt h s¹h ʻn ht w zdlh ḫṭṭ*

zd[]lh journeyed and so he exerted himself, hurrying, searching for male ostrich of these regions after male ostrich, and *zdlh* is [the] inscriber

The text is difficult to translate with confidence as the paucity of particles makes the division of some of the words ambiguous and several of the letters are unclear. *s¹r*, cf. Ar. *sāra* 'journey'. In this context it might equally be translated from *sarā* 'journey by night'. Since *zdlh* has stated he is the inscriber, it is reasonable to assume that the is the subject of the text although he has made a mistake and written *zdhl*. The next *h* is most probably a correction, although he has not crossed out the previous one written before the *l*, as, if it is taken as a particle, then it is difficult to see how the rest of the text would divide up satisfactorily. The word after the particle *f* is doubtful. The fork of the *h* is partly damaged and the following *d* has an indistinct spine and the loop of the letter is partially filled in. If the spine is not intentional, it could be a damaged *t* or *b*. Ar. *jahada* means 'labour, exert oneself', a translation from the passive *juhida* 'he was wearied' would fit the context equally well. The next letter might be an ʾ although what

appears to be the bottom right hand fork is a slight chip perhaps caused by the inscribing of the *r* which, having been left out was added to the right. The Ar. verb *haraʿa* means 'hurry, go quickly' and here would be a participle *hāriʿ* as would be the following word *bġ* cf. Ar. *baġā* 'seek after', participle *bāgⁱⁿ*. Both words form a *hāl* clause (Wright II: 112 C,D).

The word *ḫt* occurs in Saf. C 4384 in the phrase *w ṣ¹yd ḫt* which the Corpus translates as 'Et piscatus est pisces' cf. Ar. *ḥūt* 'a fish'. It is more likely, at least in the region where the present inscription was found that the word refers to an animal of some kind. The word *ḥatt* in Ar. has the meaning 'swift' and is applied not only to horses and camels but also to a male ostrich. As. *sāḥah* pl. *sāḥ* and *sūḥ* refers to a court-yard or open space in front of a house but can also mean 'region or tract' which would be suitable in this context. An alternative translation from *s¹yḥ*, *sayḥ* 'running water' would be appropriate if *ḫt* meant 'fish' but would not be relevant to an ostrich hunt. For *ʿn* Ar. *ʿan* with the meaning 'after', see Wright II: 143A and the examples quoted in Lane: 2164b. For the formula at the end of the text, see Ch.4.G.(3).

139 *s¹lḫ zdn f ʾs¹dḥ f ġny b ks¹yh*

zdn armed [himself] and he killed and layed [a beast] on the ground and so he became free from want by pursuing it.

s¹lḫ, cf. Ar. *sallaḥahu*, 'he armed him with weapons'. No object is expressed here and 'himself' must be supplied. *f* cf. the Ar. particle *fa* 'and so'. *ʾs¹dḥ* is Form IV of the root *s¹dḥ* which in Form I in Arabic means 'to kill and lay (a beast) on the ground'; *ġny b*, cf. Ar. *ġaniya bihi*, 'he became free from want by means of it'. In Arabic the verb *kasaʾa* means 'he pursued or followed', here, *ks¹yh* would be the verbal noun, Ar. *kasʾ*, and *-h* the third person pronoun in the genitive, is used to express the object.

140 *f s¹lḫ b ʿr f ṣyd w ʿl*

And *b ʿr* armed [himself] and hunted an ibex (or ibex)

The is the only instance in these inscriptions where the text begins with the particle *f*. *s¹lḫ*, see KJC 139; *ṣyd*, cf. Ar. *ṣāda*, 'he hunted'; *w ʿl*, Ar. *waʿl* pl. *waʿūl* 'ibex', here, it might be either singular or plural.

141 *l ḫwf*

By *ḫwf*

Written downwards above a drawing of an ibex. The *f* does not have very distinctive curves. *ḫwf* is not in HIn.

142 *l ʾmn h w ʿl*

By *ʾmn* is the ibex

The text is written round the front legs of the ibex to which it refers. See Ch.4.B.1.

143 *l t̲ ʿlbn*

By *t̲ ʿlbn*

The text begins between the legs of the ibex and then curves round under the hind legs. *t̲ ʿlbn* is not in HIn.

144 *w zdlh ḫṭṭ klbt*

And *zdlh* is the inscriber of a bitch

Written from right to left under the drawing of the dog. cf. Ar. *kalbah* 'bitch', the substantive *klb* occurs in KJC 74. See Ch.4.B.2.

Cdr 50 An ibex and a female dog. *ʾmn*, the author of KJC 142, mentions the former and *zdlh*, the author of KJC 144, the latter. From the position of his inscription it is likely that *t̲ ʿlbn*, KJC 143, also partook in inscribing the drawing. To the left is a lightly hammered drawing of a man with a spear ?

LV a West, facing in towards the east face of LV

145 *h lt m l m ʿz s¹b w m ʿz brr*

O *lt* [grant] to *m ʿz* a gift, and *m ʿz* is dutiful

The inscription is written on several faces of the rock. For the vocative and the type of prayer, see Ch.3.C.8 and 4.C.3. *s¹b* cf. Ar. *sayb* 'gift, benefaction' and Sab. *syb* 'gift' (Beeston et al. 1982: 130). The text ends with a nominal sentence similar in structure to the frequently used phrase *w* N *ḫṭṭ brr*, cf. Ar. *barr* (originally *barir* (Lane 176a)) 'dutiful, pious'.

LVb Horizontal, lying under the slope of rock LV

146 *l ʿlṭ*

By *ʿlṭ*

The name is not in HIn, see Index a for other occurrences at these sites.

LVc Sloping slightly southeast

147 *l brr*

By *brr*

The name occurs again on the next rock.

LVd North

147a *l brr*

By *brr*

See also KJC 147

147b *l zdqm*

By *zdqm*

zdqm is not in HIn.

LVII Horizontal, sloping slightly south

147c *l yqm*

By *yqm*

In the middle of the rock.

147d *l kʾt bn [g]fft bn bnyt bn ʿmdn*°

By *kʾt* son of *[g]fft* son of *bnyt* son of *ʿmdn*°

The text is written down and then curves to the right at the end. The *n* of the last name is doubtful. The name *kʾt* is not in HIn. I have restored a *g* at the beginning of the second name on the basis of *kʾt bn gfft* occurring in an unpublished text from the area.

147e *l bgt*

By *bgt*

Written to the right of the first name of KJC 147d.

147f *l ʾfl*

By *ʾfl*

Written down from a drawing of a camel.

147g *l h*

By *h*

To the right and above KJC 147f. The letters are most probably a false start at an inscription.

147h *l lṯ*

By *lṯ*

147i *l ḫt bn ms¹k bn ʾʿfr bn ṣ ʿb*

By *ḫt* son of *ms¹k* son of *ʾʿfr* son of *ṣ ʿb*

The text is written downwards and then curves up.

147j *l bnmṭr bn brḥt bn qdmt bn ḫlʾt*

By *mnmṭr* son of *brḥt* son of *qdmt* son of *ḫlʾt*

The text curves up after the third name. There is a *b* written to the left of the last three letters of *qdmt*, the author started to continue the text here and then because of the lack of space decided to write the last name on the other side, up the rock. Neither *bnmṭr* or *brḥt* are in HIn.

Cdr 52 (a) On the west side of the rock face: Four pecked ibex, the forelegs of one of them have not been drawn in.

(b) To the east: (1) two ibex and a dog ? of dark patina and (2) three ibex, an unidentified animal, a camel and rider and an ostrich of a lighter patina.

(c) To the left of the inscription KJC 147c: A man with his knees bent, hands in the air and a line protruding from the middle of his body and two ibex, one of which is unfinished.

(d) An ibex to the left of KJC 147d.

(e) Above KJC 147f is a camel probably drawn by *ʾfl* the author of the text.

(f) On the right: (1) an ibex of a light patina and below, (2) an ibex with a tremendously long body and one horn.

LXI West

148 *l dnn̊*

By *dnn̊*

The first *n* is slightly longer than the second. The name is not in HIn.

149 *l yqm*

By *yqm*

150 *w gḫf ḫṭṭ*

And *gḫf* is [the] inscriber

For the phrase *w* N *ḫṭṭ* used for simple authorship, see Ch.4.A.2.

151 *l gḫfl bn bhʾ bn ʾs¹lm*

By *gḫfl* son of *bhʾ* son of *ʾs¹lm*

For other occurrences of the genealogy, see Index a and Ch.5.C.2, genealogy 1.

152 *l grf*

By *grf*

153 *l s¹ʿmn*

By *s¹ʿmn*

The name is not attested in HIn.

LXIa West

154 *l s¹ʿd*

By *s¹ʿd*

LXII Southwest. See Pl.Xa.

155 *l drg ḫṭṭ*

By *drg* is [the] drawing

For this formula referring to drawings, see Ch.4.B.1 and see Cdr 58 below.

155a *l ʾs¹mnt*

By *ʾs¹mnt*

This text and KJC 156 are written downwards between the horse's legs.

156 *w rfd ḫ[ṭ][ṭ]*

And *rfd* is [the] inscriber

The *d* of *rfd* has been filled in. All of the first *ṭ* of *ḫṭṭ* has chipped away except one of the prongs and the second *ṭ* has completely disappeared. See Ch.4.B.2 for the formula and see Cdr 58.

157 *w ḏʾb ḫṭṭ*

And *ḏʾb* is [the] inscriber

For the formula, see Ch.4.B.2 and see Cdr 58 below.

158 *l ʾnʿm wr*

By *ʾnʿm* --

An unfinished text written horizontally and turning down above the horse's rump.

Cdr 58 A deeply cut horse and rider with lines marking its body. The rider is holding reins and wearing a sword. The horse's tail is a single line with hairs depicted on the lower part. Behind the horse is a drawing of a man holding a short stick, perhaps an arrow, in one hand. The rock is cracked above his other arm. The drawing is a joint composition inscribed by the authors of KJC 155, 156 and 157 and possibly 155a as well, see Ch.6.A.

Southeast. See. Pl.XIb.

159 *l s¹ʿd*

By *s¹ʿd*

s¹ʿd is probably the inscriber of the drawing, Cdr 58a.

160 *l ʾs²s²*

By *ʾs²s²*

The name is not in HIn. It occurs frequently at these sites, see Index a.

Cdr 58a A man with his arms in the air, holding a bow and a short stick, probably drawn by *s¹ʿd* the author of KJC 159.

LXIII North

161 *l grf*

By *grf*

Cdr 59 An unfinished drawing of an animal.

LXIX Southwest

162 *bʿḥn*

bʿḥn

The letters are carelessly written. *bʿḥn* is not in HIn. See Ch.4.A.4, for possible names without an introductory particle.

LXXI Horizontal, sloping slightly southwest

163 *l bns²*

By *bns²*

The name *bnʾb* which occurs in the next inscription, KJC 164, is attested frequently at this site and in some instances occurs more than once on a rock surface, see CCCVI, CCCVIII and CCCLV. It is possible that the *bns²* is an unfinished attempt at writing the name again here. The line read as *s²* would be the stroke of an incomplete *ʾ*.

164 *l bnʾb*

By *bnʾb*

The name is not in HIn. See KJC 163 and see Index a for other occurrences at these sites.

Cdr 66 Three camels drawn in outline (cf. the camels in Adr 3 and Adr 14). There are several *wusūm* on the rock as well.

LXXIII Northeast

165 *l knn*

By *knn*

The name is only previously attested in Qat. and Sab., see the Index of names and Index a for other occurrences at these sites.

166 *l ʾs²s²*

By *ʾs²s²*

The name is not in HIn. See Index a for other occurrences at these sites.

LXXVIII Northwest

167 *q l wqf*

q By *wqf*

To the left of the inscription is a *q*. The gap between the *l* and *w* has been filled in with hammering as have one section of the *w* and the lower curve of the *f*.

LXXX North. See. Pl.Xb.

168 *l ʿrhz*

By *ʿrhz*

On the top left hand side of the rock.

169 *l ḥzbr bn ʿbd bn zdqm bn bn ʾʿbd bn ʿkl*

By *ḥzbr* son of *ʿbd* son of *zdqm* son of [] *ʾʿbd* son of *ʿkl*

Written to the right of KJC 168. The final *bn* and last name are written in careless letters whereas the rest of the text is very neatly inscribed. The names *ḥzbr* and *zdqm* are not in HIn. The second *bn* before the name *ʾʿbd* is dittography. See Index a and Ch.5.C.2, genealogy 3, for other occurrences of the genealogy. KJC 188 on this rock is by *ḥzbr*'s brother.

170 *l hd*

By *hd*

Below the first name of KJC 169.

171 *l bẓ*

By *bẓ*

To the left of KJC 170. The name is not in HIn.

172 *l bġḍ*

By *bġḍ*

Inscribed to the left of KJC 171.

173 *l gml bn zrt*

By *gml* son of *zrt*

The text is written down from KJC 171. *zrt* is not in HIn.

174 *l ʾnʿm bn brd bn mtr bn ʾṯḫd bn klf bn krrt*

By *ʾnʿm* son of *brd* son of *mtr* son of *ʾṯḫd* son of *klf* son of *krrt*

Written downwards and then curving round back up the rock. The names *mtr*, *ʾṯḫd* and *krrt* are not in HIn. For other occurrences of the genealogy, see Index a and Ch.5.C.2, genealogy 2. *ʾsˡmnt bn ḥrm bn mtr* in KJC 176 on this rock is possibly the author's cousin.

175 *l knn*

By *knn*

At the top of the rock above KJC 169. The name is only previously attested in Qat. and Sab. See Index a for other occurrences at these sites.

176 *l ʾsˡmnt bn ḥrm bn mtr*

By *ʾsˡmnt* son of *ḥrm* son of *mtr*

Written below KJC 175. See KJC 174 on this rock. For other occurrences of the genealogy, see Index a and Ch.5.C.2, genealogy 2. *mtr* is not in HIn.

177 *l rʾl*

By *rʾl*

To the right of KJC 176.

178 *l ġs¹m*

By *ġs¹m*

Above KJC 177. There are two short lines to the left of the text. The name occurs again in KJC 189 on this rock.

179 *l s²mrḫ bn ḏky bn ʾḏkw*

By *s²mrḫ* son of *ḏky* son of *ʾḏkw*

To the right of KJC 178. *ʾḏkw* is not in HIn. The author of KJC 742 is possibly *s²mrḫ*'s brother.

180 *l ṣhbt bn mgʾ*

By *ṣhbt* son of *mgʾ*

At the top of the rock. The *bn* and patronymic are written to the right of the author's name. *mgʾ* is not in HIn. *ṣhbt bn mgʾ* occurs with an additional generation in KJC 118.

181 *l fnd*

By *fnd*

Written below the first name of KJC 180. *fnd* is not in HIn. See Index a for other occurrences.

182 *l ʾʿbdt*

By *ʾʿbdt*

Below KJC 181. The name is not in HIn. See Index a for other occurrences at these sites.

183 *l tnn bn s¹dn bn ḫyb*

By *tnn* son of *s¹dn* son of *ḫyb*

Written to the right of KJC 182.

184 *l nrt*

By *nrt*

To the right of KJC 183.

185 *l ʿlṭt*

By *ʿlṭt*

To the right of KJC 184.

186 *l ḫbrt*

By *ḫbrt*

Below KJC 174, near the bottom of the rock. There is a *l* to the left of the inscription and another thicker one to the right presumably they are the beginning of inscriptions which were never finished.

187 *l s¹ʿd bn mʿn*

By *s¹ʿd* son of *mʿn*

Written down from between the legs of an ibex. Probably *s¹ʿd* drew the ibex as the technique of the inscription and drawing are similar and the position of the inscription between the legs of the animal is a common place for artists to write their names.

187a *l k*

By *k*

To the left of KJC 187. The text is unfinished.

187b *l bs²*

By *bs²*

Below KJC 187a. The name is not in HIn.

188 *l ḥdmr bn ʿbd bn zdqm bn ʾʿbd*

By *ḥdmr* son of *ʿbd* son of *zdqm* son of *ʾʿbd*

Written down the rock to the right of KJC 187b. The end of the text turns to the left. There is a *t* inscribed to the right of the second name. *zdqm* is not in HIn. For other occurrences of the genealogy see Index a and Ch.5.C.2, genealogy 3. KJC 169 on this rock is by *ḥdmr*'s brother.

189 *l ġs¹m*

By *ġs¹m*

To the right of the first name of KJC 188. The name occurs as well in KJC on this rock.

Cdr 71 An ibex probably drawn by *s¹ʿd* the author of KJC 187.

Southeast

190 *l ʾs²s² bn ʿlṭ*

By *ʾs²s²* son of *ʿlṭ*

The inscription is written inside a cartouche. There is some unidentified hammering after the first name. Neither of the names are in HIn. See Index a for other occurrences at these sites.

LXXXIII West

191 *l ʾfl*

By *ʾfl*

Cdr 75 A camel with the hump not filled in. It was probably drawn by *ʾfl* the author of KJC 191.

LXXXIV Northeast

192 *l tm*

By *tm*

LXXXV Horizontal

193 *l nb(r) (b)n°*

By *nb(r)* son of

The letters are badly formed and the reading doubtful.

XC Almost horizontal, sloping slightly southeast.

194 *w hnʾ ḫṭṭ*

And *hnʾ* is [the] inscriber

For this formula referring to drawings, see Ch.4.B.2.

Cdr 80 A feline attacking a man. One arm of the man is drawn into the neck of the animal, perhaps showing that he is piercing it with a spear. Below is an archer and behind him a small drawing of an ostrich. The drawing has been re-hammered and is a slightly lighter colour than the artist's inscription, KJC 194.

XCI West southwest

195 *l zdqm*

By *zdqm*

The name is not in HIn. See Index a for other occurrences at these sites.

196 *l whb*

By *whb*

XCIII Horizontal

197 *l ṣhbt*

By *ṣhbt*

198 *l ḥzbr*

By *ḥzbr*

The *r* of the name is written some distance from the other letters. There is an extraneous line above the text. The name is not in HIn. See Index a for other occurrences at these sites.

XCV In a dip on the northwest face of the rock

199 *l gʿṯm*

By *gʿṯm*

The name occurs again in KJC 390.

200 *l grmlh bn s²kmlh*

By *grmlh* son of *s²kmlh*

The initial *l* and a section of one of the circles of the *g* have been subsequently hammered over and are a whitish colour. *s²kmlh* is not in HIn.

West

201 *l y'l*

By *y'l*

The final *l* is curved backwards as well as having a hook.

Cdr 83 There are drawings of darker and lighter patina on the rock surface:

(a) To the left of KJC 201 are two camels, one with two stumpy legs, and slightly below, two ibex.

(b) To the right of KJC 200 is an unfinished stick animal and an ibex with ridged horns bending over the full length of the body.

(c) Of a lighter patina are drawings of a camel with a rein, a camel and a stick horse and rider ? next to each other and to the right, a camel that has been turned into an ibex by the addition of horns.

(d) To the right of KJC 199 is an animal with straight horns with, possibly, a dog drawn the other way up attacking it. Further to the right is an unfinished stick animal and an ibex.

There are several *wusūm* on the rock as well.

XCVIII Northeast. See Pl.XIa.

202 *l ḫg bn s¹ʿdt [w] [ḏ]krt lt ndmn ʿbdʾl(ʾ)[ḥ]wr bn mḥwr w ḫg ḫṭṭ*

By *ḫg* son of *s¹ʿdt* and may *lt* remember our boon companion *ʿbdʾl(ʾ)[h]wr* son of *mḥwr* and *ḫg* is [the] inscriber

The text is written in a loop. The *w* and *ḏ* at the beginning of the clause *w ḏkrt lt* has been completely hammered out. The upper fork of the second *ʾ* is obscured by hammering as is the following letter which I have restored as *ḥ* on the basis of the divine element occurring in the names *tmʾḥwr* (TIJ 323) and *whbʾḥwr* (KJC 291). Here it occurs with the definite article, cf. *tmlḥwr* and names formed with *ʿbd* + *g* which occurs both without the article, *ʿbdg* (TIJ 136), and

with it, *ʿbdlg* (KJC 205, 647). Another example of the definite article *ʾl* written with prosthetic *ʾalif* occurs in the name *ʿbdʾlyb*, see Ch.3.B.8 and Ch.8.A. For the element *ʾhwr*, see Ch.5.A.1.b. For prayers of this type, see Ch.4.C.1. *ndm* is previously unattested (cf. Ar. *nadīm* 'boon companion'). It occurs with the first person plural possessive pronoun *-n*. For another complex statement which begins with a *l* N phrase and ends with a *w* N *ḫṭṭ* phrase, see AMJ 46 and Ch.4.G.(3).

203 *l s²ᵒmmt*

By *s²ᵒmmt*

The *l* is a short line as is the letter I have read as *s²*. The second *m* has been left out and is written below the rest of the text. The name is not in HIn.

Cdr 86 Two ibex. Below the beginning of KJC 202 is an unidentified drawing.

CVI North

204 *l tmlh*

By *tmlh*

205 *l ʾ[f]l bn ʿbdlg*

By *ʾ[f]l* son of *ʿbdlg*

Part of the second letter and almost all the third letter are damaged by a chip in the rock. I have restored *f* on the basis of *ʾfl* occurring elsewhere in the collection. It occurs on the same rock with an inscription by *ʿbdlg*, see KJC 646 and 647. For the name *ʿbdlg*, see Ch.5.A.1.

Cdr 93 A horse and rider ? and a camel. The drawings might have been inscribed by the author of either KJC 204 or 205 or both.

CXIV Southeast

206 *l ʾrs²*

By *ʾrs²*

CXIX Horizontal

207 *l ʿrs¹ bn ḥrs¹*

By *ʿrs¹* son of *ḥrs¹*

The first name, cut more deeply, is a light orangey and the *bn* and second name which are shallower, an orangey grey. See Index a for other occurrences of *ʿrs¹ bn ḥrs¹* at these sites.

Cdr 106 A stick animal of lighter patina.

CXXI Horizontal

208 *l̊q*

By *q*

The initial *l* is rounded. The text is unfinished.

Below KJC 208, Sloping south

Cdr 108 An ibex

CXXIV West, the rock face slants inwards

209 *l drg*

By *drg*

CXXV West

210 *l mbʿl*

By *mbʿl*

The *ʿ* has a dot in the middle of the circle. There is a triangle without a base on the rock face as well, possibly a *wasm*, and a circle with a curved tail. The name is not in HIn. See Index a for other occurrences at these sites.

CXXVI Northeast

211 *l tm bn bnlh*

By *tm* son of *bnlh*

The same names occur in KJB 66 and 169.

CXXXIII South

212 *l zdqm bn tm [ ] bn ʿṣm ḏw*

By *zdqm* son of *tm* son of *ʿṣm* --

There is a shallow line before the second *bn* and it is possible that it introduces a second text *l bn ʿṣm ḏw*. The above reading is more likely. The text is probably unfinished. *zdqm* is not in HIn.

CXXXVIII Sloping southeast

213 *l ṣhbt*

By *ṣhbt*

214 *l nṣr*

By *nṣr*

Cdr 122 Doodling of a light patina.

CXLII Northwest

215 *l gr*

By *gr*

To the left of the inscription is a crudely hammered *l* and *t*.

CXLVIII Northwest

216 *l ʾs¹d*

By *ʾs¹d*

CLIII Southeast

217 *l fḍn*

By *fḍn*

The name is not in HIn. It is also attested in KJA 246.

Cdr 135 An unidentified drawing of a light patina to the left of KJC 217.

CLVII East

218 *l tm bn wgd[t]*

By *tm* son of *wgd[t]*

There is a chip over the last letter of the second name. *[]m bn wgdt* occurs in KJA 355.

Cdr 139 A camel to the left of the inscription. The hind leg of the camel slightly covers the *m*, *b* and *n* of KJC 218.

CLVIII East

219 *w ḏ'b ḫṭṭ*

And *ḏ'b* is [the] inscriber

Written down and round the neck and front legs of an ibex. *ḏ'b*. There are several drawings on the rock of which *ḏ'b* might be the artist. For the formula, see Ch.4.B.2.

220 *l s¹ ʿd*

By *s¹ ʿd*

The author might be a co-artist of the drawing.

Cdr 140 An ibex being chased by a seluqi and to the right an archer. Below is another dog and to the right a further ibex. On the left of the rock is a camel with only two legs depicted and a more recent line, a rein ?, going from the head to the rider. Below KJC 219 is a line with two legs.

CLIX Almost horizontal, sloping slightly west southwest

221 *l ʾs¹mnt bn ḥrm*

By *ʾs¹mnt* son of *ḥrm*

For other occurrences of *ʾs¹mnt bn ḥrm*, see Index a.

222 *l ʿrs¹ h ḫṭṭ ʿls¹*

By *ʿrs¹* is the drawing ---

Written above the head of an ibex. The letters are badly formed. The fork of the *h* is shallow. Perhaps what I have read as *l* after *ḫṭṭ* should be restored as *r* and read as a repetition of the author's name. For this formula used with drawings, see Ch.4.B.1.

223 *l ʾmt bn ʾdm°*

By *ʾmt* son of *ʾdm°*

The final *m* is an unusual triangular shape.

Cdr 141 An ibex drawn by *ʿrs¹* the author of KJC 222.

CLXVII Northeast

224 *l bgt bn tmʾl*

By *bgt* son of *tmʾl*

The first two letters have a white patina and the rest are grey. The names occur with a further generation in KJC 508.

Southeast

Cdr 150 A gazelle ? the horns are short and not curved.

CLXXI Northwest

225 *l fṣy[t]*

By *fṣy[t]*

The letters are crudely inscribed. The name might read *fṣy* but here is a hammer mark after the fourth letter and I have restored a *t* on the basis of the name in KJC 227 etc.

Cdr 154 A dog attacking an ostrich from behind and a camel with a rider. The latter is sitting on the top of the hump with his legs astride and raised. In one hand he is holding a rein and in the other a stick. *fṣyt* the author of KJC 225 was probably the artist.

CLXXII Northwest

226 *l rbʿn°*

By *rbʿn°*

The last letter is doubtful.

Cdr 155 A camel ? and rider holding a stick and with one arm in the air. There are three ostriches, all with wings depicted, being chased by a dog. There are two ibex, one of which has only one horn and two legs. *rbʿn* the author of KJC 226 was probably the artist.

CLXXIV East

227 *l fṣyt*

By *fṣyt*

228 *l flṭt*

By *flṭt*

The initial *l* has been partly hammered over. There is a *sījī* board of a darker patina between this inscription and KJC 227.

CLXXV South southeast

229 *l k̊m*

By *k̊m*

An extra hook has been added to the *l* and it has been joined to the second letter with rough hammer marks at the base. The horizontal strokes of the *k* have been joined together

forming a square and hammer marks have been added to make a circle out of the semi-circular indentation of the *m*. The same has been done to the *m* of KJC 230.

230 *l -m*

By *-m*

The second letter is obscured by hammering. There seems to be a *t* written below the other letters of the text. The central curve of the *m* has been added to forming a circle. See KJC 229.

231 *l l̲t̲*

By *l̲t̲*

CLXXVII North

232 *l ʾs¹d*

By *ʾs¹d*

233 *l d̲--*

By *d̲--*

The rock is chipped after the *d̲* and no letters are visible.

234 *l rbʿ*

By *rbʿ*

235 *l mr°*

By *mr°*

There is an extraneous stroke coming out from the prongs of the ʿ.

Cdr 157 A running archer chasing an ibex with a dog. Below is another ibex. The fore and hind legs of all the animals are drawn as thick stumps rather than depicted individually. It is uncertain which of the authors on the rock inscribed the drawing.

CLXXVIII Horizontal

236 *l t̲r'*

By *t̲r'*

The initial *l* is slightly curved.

CLXXX West

237 *l ftyt*

By *ftyt*

The text is neatly inscribed in a different technique to that of the drawing.

Cdr 159 A horseman carrying a spear ?, an ostrich and, to the left, a small ibex. A man with his hands in the air who is standing above an ibex drawn on its side. To the right is a dog, the head of which has been chipped away.

CLXXXI Practically horizontal, sloping slightly north

238 *l gḥ(f)l*

By *gḥ(f)l*

The initial *l* is very short and the hook at the bottom of the letter faces in the opposite direction to that in which the text reads. The *f* is not wavy and is formed of a straight line with a horizontal line at one end and a curve at the other.

CLXXXII Practically horizontal, sloping slightly west

239 *l yrfn*

By *yrfn*

The name is not in HIn. It occurs again in KJC 567.

CLXXXIII Horizontal

240 *l hn'*

By *hn'*

CLXXXIV Northwest

241 *l ʾʿbdt*

By *ʾʿbdt*

The name is not in HIn. See Index a for other occurrences at these sites.

242 *l ḥglt*

By *ḥglt*

The name is not in HIn. The second *l* is slightly wiggly and indistinct.

CLXXXV Southwest

243 *l hyḏd*

By *hyḏd*

The circle of the *y* is directly hammered in a different technique to the other letters of the inscription and it of a slightly lighter patina. *hyd* is not in HIn.

244 *l ʿ*

By *ʿ*

An unfinished text.

245 *l ʿrb*

By *ʿrb*

Cdr 160 To the right of KJC 243-245 is an ibex.

CLXXXVI East

246 *l h*˚-

By *h*˚-

The letter *l* is legible although the legs of an ibex have been drawn over the top of it and the fork of another letter which might be a *h*, *ʾ* or *ṣ*. The rest of the letter is obscured by the horns of an ibex.

Cdr 161 (a) Three ostriches of various sizes, standing in a row, and an ibex drawn in outline with long horns curving back.

(b) Of a lighter patina, is an animal with straight horns bent slightly back, two ibex and a stick dog ?. There are hammer marks on the rock face as well.

CXC Northeast

247 *l ʾrs²*

By *ʾrs²*

Cdr 166 A camel with a long back and hump drawn at the rear. Part of the hump has been left in relief. *ʾrs²*, the author of KJC 247, probably inscribed it.

CXCI West

248 *l ʾs²ṣr*

By *ʾs²ṣr*

The name is not in HIn. See Index a for other occurrences at these sites.

There is no KJC 249.

250 *l tr*

By *tr*

The *r* is partly covered by the *m* of KJC 253.

251 *l ḥb*

By *ḥb*

252 *l h*

By *h*

The text is unfinished.

253 *l ḥr bn ʾdrm*

By *ḥr* son of *ʾdrm*

The text is written down the rock and then turns upwards. The *m* of *ʾdrm* is written in the opposite direction to the other letters of the text. *ʾdrm* is not in HIn. See Index a for other occurrences of *ḥr bn ʾdrm*.

254 *l wh(b)lh (b)n ʿqrb*

By *wh(b)lh* son of *ʿqrb*

To the right and below KJC 248-253. The text is written down the rock and then continues up after the first name. The first and second *b* are covered by abrasions, the reading, however, is certain.

255 *l whblh bn ʿmr*

By *whblh* son of *ʿmr*

The rock is chipped after the final *r*.

CXCII West

256 *l k*

By *k*

The second letter is partially chipped. The text is unfinished.

257 *l brr bn ʾs¹mnt*

By *brr* son of *ʾs¹mnt*

The names occur in KJC 128 and 668.

258 *l qnlh bṣ*

By *qnlh* ? ?

There is a natural pit in the rock after the *b* but no traces of the letter *n*. The fork of the *ṣ* is slightly damaged by hammering. *qnlh* is not in HIn. See Index a for other occurrences at these sites.

259 *h ḏs²ry l kmn*

O *ḏs²ry* [grant ?] to *kmn*

Part of the *m* is covered by a chip. The rock is damaged after the *n*. See Ch.4.C.3 for this type of prayer.

260 *w dʿ ḏs²r lḏf*

And may *ḏs²r* call *lḏf*

Part of the *f* is covered by a chip in the rock. The *ḏ*'s are written with four prongs, the tail of the first one is inscribed out to the left and then bends down. The second has a short curve for the tail. For this type of prayer, see Ch.4.C.3.

CXCIV North

261 *l ʿrs¹ bn ḥrs¹*

By *ʿrs¹* son of *ḥrs¹*

See Index a for other occurrences of *ʿrs¹ bn ḥrs¹*.

262 *l ḥg*

By *ḥg*

263 *l ʾs¹mnt bn ḥrm*

By *ʾs¹mnt* son of *ḥrm*

See Index a for other occurrences of *ʾs¹mnt bn ḥrm*.

264 *l drs¹ bn dḥk*

By *drs¹* son of *dḥk*

The name occurs again in KJC 458.

265 *l kʾt*

By *kʾt*

The text is written downwards between the horns and body of an ibex. The name is not in HIn. See Index a for other occurrences at these sites. The position of the inscription suggests that *kʾt* is the artist.

Cdr 169 A camel with a large hump drawn in outline and a single curling line with the head and neck. An ibex drawn in outline with a square body and long horns curving back. Below are two smaller ibex. *kʾt* the author of KJC 265 is most likely the artist of the larger ibex and either *ʾs¹mnt*, KJC 263, or *drs¹*, KJC 264, probably drew the camel.

CXCV North

266 *l grmlh*

By *grmlh*

CXVI Southwest

267 *l ʿmr bn ʿbs¹*

By *ʿmr* son of *ʿbs¹*

268 *ṭ ʿs¹ḥ*

?

Part of the first letter is damaged by hammering. The letters do not make any coherent sense and might be practise letters.

CXCVI Southwest

269 *l ʾrs² bn ʾftḥ*

By *ʾrs²* son of *ʾftḥ*

The *ʾrs² bn ʾftḥ* occurs again in KJC 380 and 573.

CXVII East

270 *l ʾs¹ bn ʿhn bn tm*

By *ʾs¹* son of *ʿhn* son of *tm*

bn tm is written below the text and near the end of KJC 271. The words probably belong to this text, unless the author of KJC 271 has written his great-grandfather's name twice or *tm* is the name of both his great-grandfather and great great-grandfather.

271 *l ḫr bn ʾdrm bn ʾs¹lh bn tm*

By *ḫr* son of *ʾdrm* son of *ʾs¹lh* son of *tm*

The first *m* is a strange shape. *ḫr bn ʾdrm* occurs in KJC 253 where the *m* back to front. *ʾdrm* is not in HIn. See Index a for other occurrences at these sites. See KJC 270.

CXCIX Practically horizontal, sloping northwest

272 *w ḏkrt lt ʿbdḥrṯt*
And may *lt* remember *ʿbdḥrṯt*
= KJPr 1.
The *ḥ* of the proper name has an unusually long tail and is written on its side. *ʿbdḥrṯt* is not in HIn. See Ch.5.A.1. For this type of prayer, see Ch.4.C.1. There is a *d* and *t* inscribed to the left of the text.

Cdr 171 An ibex.

CC Southeast

273 *l mlgn*
By *mlgn*
The name is not in HIn. See Index a for other occurrences at these sites.

274 *l ʿm bn ʾʿbd*
By *ʿm* son of *ʾʿbd*
The *b* and *d* of the second name are written horizontally below the end of KJC 275 in order to avoid a dip in the rock. See KJA 194 for *ʿm bn ʾʿbd* with an additional generation.

275 *l sˡʿd*
By *sˡʿd*

276 *l hkn*
By *hkn*
The name is not in HIn.

CCI East

277 *l ʾʿbdt*
By *ʾʿbdt*

The letters of the text have been joined up and altered. The initial *l* has been joined to the ʾ. The forks of the ʾ have lines across giving the letter the appearance of a *g*. There is a ligature extending from the bottom fork of the ʾ to the ʿ and another on the other side of the ʿ joining it to the *b*. The arms of the *b* have been joined to form a rectangle and extended to attach the letter to the *d*. The final *t* has been left unattached. The name is not in HIn. See Index a for other occurrences at these sites.

278 *ʿls²trk ʾs²ṣr ʾtbtmrkbh-ḏbt*

??????

The text starts to the right of KJC 277 and then continues in a wavy line running right to left below it. The ʿ is a little below the rest of the text and might not belong. *ʾs²ṣr* might be a proper name, see the Index of names, but I am uncertain how to translate the rest of the text.

279 *l md-ʿ-*

By *md-ʿ-*

On the right side of the rock near the end of KJC 278.

280 *l krh bn wʿl*

By *krh* son of *wʿl*

To the right of the end of KJC 278.

281 *l s¹rqt bn ʾlwḏ*

By *s¹rqt* son of *ʾlwḏ*

Written above the head of a seluqi and curving upwards. The *ḏ* is written to the right of the *w*.

282 *l ʾḫʾb bn ʿnʾl*

By *ʾḫʾb* son of *ʿnʾl*

Written downwards in front of a seluqi. *ʾḫʾb* is possibly the father of *fnd bn ʾḫʾb* in KJC 283 on this rock.

283 *l fnd bn ʾḫʾb*

By *fnd* son of *ʾḫʾb*

The author's name and patronymic are written down the rock, side by side. KJC 282 is possibly by *fnd*'s father. *fnd bn ʾḫʾb* occurs in KJC 4 as well.

284 *l bntrb*

By *bntrb*

Running at a slant below KJC 278. The name is not attested in HIn.

285 *l ʿyl*

By *ʿyl*

Below KJC 284.

286 *l nmr*

By *nmr*

On the left side of the rock, written to the left of a seluqi.

287 *l ʾs²ṣr bn zdqm ḫṭṭ*

By *ʾs²ṣr* son of *zdqm* is [the] drawing

The text starts between the legs of a seluqi and then turns right. The word *ḫṭṭ* is written left to right above the end of *zdqm*. Neither names are in HIn. See Index a for other occurrences at these sites. For this formula referring to drawings, see Ch.4.B.1.

288 *l ʾbn*

By *ʾbn*

Written after the end of KJC 283.

289 *l ṯ̊ntn*

By *ṯ̊ntn*

Written clockwise in a circle below KJC 285. The letters are crudely formed text and the interpretation doubtful. The name is not in HIn.

290 *l ʿbd bn s¹yr bn s¹lm*

By *ʿbd* son of *s¹yr* son of *s¹lm*

Written downwards from KJC 289 and then turning left. *bn s¹lm* is written at a right angle to the rest of the text. See Index a for occurrences of *ʿbd bn s¹yr*.

Cdr 172 A seluqi and an ibex drawn by *ʾs²ṣr* the author of KJC 287.

CCIII West

291 *l whbʾḫwr bn bẕry bn ns²r bn fl- ---- bn tṣr bn -*

By *whbʾḫwr* son of *bẕry* son of *ns²r* son of *fl-* ---- son of *tṣr* son of -

The rock has flaked away and the middle and end of the text have disappeared. It is possibly that *bn tṣr bn-* is part of a separate text, the beginning of which is no longer there. There are remains of what might be a small circle after the fifth *bn*. The first name and *bn* are a blackish colour and the second, third and fourth names of the genealogy are a light sandy colour. Neither *whbʾḫwr* or *bẕry* are in HIn. *ʿbdʾḫwr* occurs in KJC 757, *ʿbdʾlḫwr* occurs in KJC 202 and *tmʾḫwr* in TIJ 323, see Ch.5.A.1.b for the element *ʾḫwr*.

292 *--tm bn k--*

--tm son of *k--*

The beginning and end of the text has flaked away. There are lines belonging to two letters after the *k*.

CCIVa Northeast

293 *btydḫfs¹t w ḥzbr -----s¹ʿdt*

???? and *ḥzbr ----s¹dt*

The rock is very worn and the letters faint. The names *ḥzbr* and *s¹ʿdt* are certain. *ḥzbr* is not in HIn.

293a *kld*

???

This might be a name but I think some letters are missing.

CCX East

294 *l ʿrs¹*

By *ʿrs¹*

CCXI Southwest

295 *w sˡlm bn ẓ ʿnt ḫṭṭ*

And *sˡlm* son of *ẓ ʿnt* is [the] inscriber

The inscription is written down the rock and then turns right. The *sˡ* has a slight line drawn across the opening. *sˡlm bn ẓ ʿnt* occurs in KJA 88 and KJC 749. For the formula referring to drawings, see Ch.4.B.2.

295a *l r*

By *r*

Written to the right of the drawing of a feline. The text is unfinished.

Cdr 182 A feline drawn in deep lines. The animal has three claws to each foot, an eye left in relief and a long tail curved at the end. There is a line drawn on the shoulder and another on the thigh. To the right is a drawing of a man with his hands in the air, holding a whip ?. It is not drawn in the same style as the feline and was probably added later. To the left of the inscription is another man. The feline was drawn by *sˡlm* the author of KJC 295.

CCXII Northwest

296 *l ṯ̊mʾl*

By *ṯ̊mʾl*

The *t* has been hammered over and the lines of the cross are indistinct.

297 *l sˡdt̊° bn ytr°*

By *sˡdt̊°* son of *ytr°*

Part of the *d* and second *l* are covered by a chip. The final *r* is doubtful as there is a chip over the letter. It might be another *t*.

297a *h---bn--*

The rock is chipped after the letter *h*. There is a *b*, *n* and traces of another two letters covered by the chip to the right which might be a continuation of the text or might be another text beginning with a *l* which is inscribed above and slightly to the right.

298 *br ʾlk(b)s¹nn*

????

The *b* and *r* at the beginning are shallower than the other letters. The sixth letter which I have read as a *b* has a very beep curve. The interpretation of the text is unclear.

CCXII Southeast

299 *l tn*

By *tn*

The name is not in HIn.

CCXIII Northeast

300 *l fṣ(y)t*

By *fṣ(y)t*

The circle of the *y* is incomplete.

301 *l ġ°--*

By *ġ°--*

The second letter seems to be an unfinished *ġ*, the second horizontal line has not been drawn.

Southwest

302 *l s¹rqt*

By *s¹rqt*

CCXIV Northwest

303 *l mġny*

By *mġny*

The *m* has been hammered in.

304 *-hʿl ḥbb*

The rock is chipped before the *h*. *l ḥbb* might be a separate text 'By *ḥbb*' or a continuation of what was written before.

305 *rb s²q b mtʿ*

mtʿ feels much desire

To the right of KJC 304. The *r*, which is partially covered by subsequent chipping, is similar in shape to the following *b*. The ʿ is doubtful as the rock is damaged, it might be a *y*. For this type of love text, see Ch.4.E.1.

306 *l ġnṯ*

By *ġnṯ*

To the right of KJC 305. The text is damaged between the *ġ* and *ṯ*. There is a slight stroke which I have read as a *n*.

307 *l krt bn ftḥt*

By *krt* son of *ftḥt*

To the right of KJC 306. The *r* is written inside the arms of the *k*. The *t* of the first name has been hammered and the cross lines are indistinct. *krt bn ftḥt* occurs in KJA 111 and KJB 132 is possibly written by his son.

308 *l ḥrw*

By *ḥrw*

Written above the *bn* of KJC 307. There are two *l*'s written slightly to the right of the *w*.

309 *l t*

By *t*

An unfinished text below and to the left of the end of KJC 307.

CCXIV West

310 *rb s²q b s²mrḫ ʾl - ṯ*

s²mrḫ feels much desire towards - *ṯ*

The text is written down a ridge in the rock. There are shallow ligatures joining the second *s²* to the *m*, the *m* to the *r*, the *r* to the *ḫ* and the *ḫ* to one fork of the *ʾ*. After the proper name *s²mrḫ*, the text is written horizontally at right angles to the rest. There is a line going diagonally across the *l*, probably with the intention of joining it to the preceding *ʾ* and the following letter. The rock is chipped after the *l* and no letter is visible. Only two spokes of the *ṯ* are visible and the centre has been filled in. For this type of love text, see Ch.4.E.1.

Southwest

311 *l s²mrḫ*

By *s²mrḫ*

The *l*, *s²*, *m* and *r* are joined together by shallow hammering. The *m* and the spaces between the arms of the *ḫ* have been filled in.

312 *l ʿkmt*

By *ʿkmt*

The name is not in HIn.

Cdr 193 A camel. There is a line above its head.

CCXIV Southeast

313 *rbr ?*

Written above the camel and rider.

314 *l s¹yr ḫṯṯ*

By *s¹yr* is [the] drawing

The *s¹*, the circle of the *y*, the gap between one set of arms of the *ḫ* and both the *ṯ*'s have been hammered over and filled in. For this formula used with drawings, see Ch.4.B.1. The text is written down between the legs of a camel and rider to which *s¹yr* is referring. He might have inscribed the drawing to the left as well.

315 *l (w)ḫgˤbn ḏk(y)*

By *(w)ḫgˤ*son of *ḏk(y)*

The *w* of the first name has been filled in. The *b* and *n* have been formed into a circle. The last letter is an infilled circle with a short line with a smaller circle on the end. It might all be a *y* or, perhaps, a *y* followed by another unidentifiable letter. The same names with infilling of the *w*, joining of the *b* and *n* and infilling of the ninth letter occurs in KJA 212. *wḥg* is not in HIn.

Cdr 184 A camel and a badly drawn rider holding reins. To the right is a man with one arm bend left upwards and the other held out straight. *s¹yr* the author of KJC 314 mentions a drawing, he is referring to the camel and possibly the man as well.

CCXV Southwest. See Pl.XIb.

316 *h ḏs²*

O *ḏs²*

The text is unfinished. The *h* has been joined on the tail of the *ḏ* by hammer marks.

317 *s¹b ḏs²ry l lṯ ġny*

May *ḏs²ry* give ? to *lṯ* freedom from want

Except for the initial *s¹* the letters of the text have been joined up by lighter hammering. The tail of the *ḏ* bends to join one arm of the *b* and another line links it to the other arm. A line runs from one prong of the *ḏ* through the *s²* to the *r*. The circle of the *y* is joined to an arm of the *r* and to one end of the following *l*. Slight hammering joins this *l* to the second, which is attached to the *ṯ* by an extension to the hook linking it to one spoke and a short diagonal line linking it to another. Two spokes of the *ṯ* have been extended in the other direction to join the tail of the *ġ* and its back between the two horizontal line. The *n* is linked to the *ġ* by a line starting just above the tail and to the final *y* by a line joined to the circle of the *y*.

The position of the word *s¹b* before the deity's name and the lack of a vocative particle suggests that the word is a verb in the perfect with an optative sense, see Ch.4.C.5. Neither *sabba* 'he reviled' or *sabā* 'he made captive' provide a suitable meaning. The substantive *sb* which I have translated as 'gift' (cf. Ar. *sayb*) occurs in KJC 145. The basic meaning of the root, however, 'is run (of water)' which would not be appropriate here either, although Kaz. lists Form II with the meaning 'give'. The word *ġny*, Ar. *ġanāʾ* 'freedom from want', occurs in other prayers, see Ch.4.C.3.

There are five lines in various places inscribed on the rock face as well.

CCXV Northwest

318 *l bġṯt ḫṭṭ*

By *bġṯt* is [the] inscriber

The last word is written over a ridge and on to a different face to the beginning. It is possible that the first letter is a *r* and the name should be read *rġṯt*. For the formula referring to drawings, see Ch.4.B.1. There is a camel below the text.

Cdr 185 A camel drawn by *bġṯt* the author of KJC 318.

CCXVI Northwest

319 *l qym*

By *qym*

CCXVII South

320 *l tmʾl*

By *tmʾl*

CCXVIII Practically horizontal, sloping south west. See Pl.XIIa, for KJC 321.

321 *l lhṯ bn ʾs¹lm*

By *lhṯ* son of *ʾs¹lm*

The two *l*'s at the beginning are joined up to form a loop. The fork of the *h* and the centre of the *ṯ* have been filled in. The bottom fork of the *ʾ* has been joined. The *b* and *n* of *bn* have been joined to form a circle and the *s¹* is linked to the *l* in the second name by shallow hammering extending from one of the arms and a second hook has been added to the *l* to join it to the *m*. *lhṯ* does not occur in HIn. For other occurrences of the names, see KJB 30 and KJC 750.

322 *l mty bn rfʾy*

By *mty* son of *rfʾy*

mty bn rfʾy occurs elsewhere, see Index a.

CCXX Horizontal

323 *l s¹*

By *s¹*

The text is unfinished. There is some recent doodling after the *s¹* but there does not seem to be any traces of further letters.

Cdr 187 Doodling

CCXXI Practically horizontal, sloping slightly west

324 *lʾltb*

By *ltb*

The first letter is slightly thicker than the rest and does not appear to have a hook. It might be a first attempt at an initial *l* which was then repeated. If that is the case the inscription should be read *l tb*. Neither *ltb* nor *tb* is in HIn.

CCXXII Northwest

325 *w g*

And *g*

The text is most probably a false start at writing KJC 326.

326 *w gḫfl ḫṭṭ*

And *gḫfl* is [the] inscriber

The second *ṭ* of *ḫṭṭ* is written on a vertical surface of the rock. *gḫfl* is referring to an ibex. The *f* has only one distinctive hook, cf. the unusual shape of the letter in the same name in KJC 238. For the expression referring to drawings, see Ch.4.B.2.

Cdr 188 An ibex.

CCXXIV Practically horizontal, sloping slightly south

327 *l°l°-- h°(or ʾ) hm*

By *l*-----

The text is hammered over and badly damaged. The lines which I have taken as the first two letters, form three sides of a rectangle which might be two *l*'s joined together at one end or a *l* and a *s*². The next legible letter might be a *h*, ʾor *ṣ*. The lines of the *m* are joined by hammering.

CCXXV Northeast

328 *--bk°*

--bk°

The rock is weathered before the first letter and nothing is legible. There might be a *n* after the *b* although the dot is probably natural. The second letter is doubtful, it might be a badly formed *k*.

CCXXVII South

329 *l bʾrʾd bt ʿlʾm*

By *bʾrʾd* daughter of *ʿlʾm*

The letters are crudely hammered. There are lines joining some of them together. This is the only text by a woman from these sites.

CCXXIX South

330 *-- bn ḏ----r°*

--son of *ḏ----r°*

The rock is very chipped and eroded. The field copy has an ʾ after the *ḏ* but it is not visible on the photograph.

330a *--ṯṯ*

--ṯṯ

Everything before these two letters is eroded. The inscription probably ended in *ḫṯṯ*.

CCXXX A loose boulder facing southeast when found.

331 *l zdn bn ʾġ[nt]*

By *zdn* son of *ʾġ[nt]*

The rock is worn after the *ʾ* and *ġ*. I have restored *n* and *t* on the basis of the name occurring in KJC 740. Neither of the names is in HIn. See Index a for other occurrences at these sites.

CCXXXII Southeast

332 *l mtʿ*

By *mtʿ*

333 *l ʿyḏ bn ḏʾb*

By *ʿyḏ* son of *ḏʾb*

CCXXXIII Practically horizontal

334 *l ʾs²s²*

By *ʾs²s²*

The name is not in HIn. See Index a for other occurrences at these sites.

CCXXXV West

335 *l bn ʾl*

By *bn ʾl*

CCXXXVII West

336 *l mbʿl (ḫ)ṭṭ*

By *mbʿl* is [the] drawing

The *ḫ* looks more like an *ʾ*. The drawing that *mb ʿl* refers to is a camel suckling a young camel. For the formula used with drawings, see Ch.4.B.1. *mb ʿl* is not in HIn. See Index a for other occurrences at these sites.

337 *l ʿrs¹ bn ḥrs¹*

By *ʿrs¹* son of *ḥrs¹*

ʿrs¹ bn ḥrs¹ occurs elsewhere, see Index a.

Cdr 195 A camel suckling a young camel. The drawing is acknowledged by *mb ʿl* the author of KJC 336.

CCXXXVIII Northwest

338 *[l] ʿrs¹*

[By] *ʿrs¹*

The rock is hammered before the *ʿ*. The outline of the *ʿ* and half of one arm of the *s¹* have subsequently been hammered over.

338a *l s¹*

By *s¹*

An unfinished text written in crude letters.

CCXXXVIII East

339 *l s²ᵒʾwt*

By *s²ᵒʾwt*

The text is written in badly formed letters. The name is not in HIn.

340 *l ʾ*

By *ʾ*

Written to the right of KJC 339. The text is unfinished.

341 *l ẓ ʿnt*

By *ẓ ʿnt*

CCXLI South southeast

342 *l ʿrs¹*

By *ʿrs¹*

There is a chip covering part of the *s¹* but the reading is certain.

343 *l zḥn*

By *zḥn*

The name is not in HIn.

CCXLIII North

344 *l hn°ˀ*

By *hn°ˀ*

Part of the *n* and most of the *ˀ* is covered by the rein of a drawing of a camel and rider. There is possibly a *g* inscribed under one of the ibex on the rock surface. One of the circles of the letter has been hammered over.

Cdr 199 A camel and rider of whitish patina. There is a stick ibex in the bottom right hand corner and another stick ibex with one horn to the left of the camel and rider. Above are some unidentified lines and a *sījī* board, to the left of which is an unfinished stick animal.

CCXLIV East

345 *l ʿlyn*

By *ʿlyn*

346 *l w ʿl*

By *w ʿl*

CCXLV Southwest

347 *l <u>t</u> ʿt w rb s¹qm bh*

By *t ʿt*; and he feels much sickness

For other texts using *rb* see, Ch.4.E.1. Unlike the majority of attested examples, the love text is expressed by an expanded *l* N phrase, see Ch.4.G.(2). The subject of the love phrase is expressed by the third person suffixed pronoun *-h*.

CCL South southwest

348 *l (tˤ)mlh*

By *(tˤ)mlh*

The second letter is a hammered circle and I have restored it as a *t*. The letter might be an *ʿ*. *ʿmlh* is not in HIn although *ʿmʾl* attested in the dialect, see the Index of names.

CCLII East

349 *l h*

By *h*

The text is unfinished.

350 *l brr*

By *brr*

CCLIII East

351 *l mʔ(ʿ)n nk sᶩmʿˤn*

By *mʔ(ʿ)n;* he had sex with *sᶩmʿˤn*

The inscription is carelessly hammered and the third letter is damaged by a chip. the second *m* is a rectangular shape. Love texts using *nk* occur elsewhere, see Ch.4.E.2. This is the only attested example in which this type of text is expressed as an expanded *l* N phrase, cf. KJB 63, KJC 347 and see Ch.4.G.(2).

CCLV West

352 *l hr*

By *hr*

353 *l s¹mʿn*

By *s¹mʿn*

CCLVII Northeast

354 *-s¹*

-s¹

On the left side of the rock. Nothing is legible before the *s¹*.

355 *l -s¹*

By *-s¹*

There is a chip between the two letters and another after the *s¹*. It is possible the text continues.

356 *[l] ġlnṯ*

[By] *ġlnṯ*

Only one arm of what is probably a *ġ* remain before the *n*. For other occurrences of *ġnṯ* at these sites, see Index a.

357 *[l] s¹yr*

[By] *s¹yr*

The *l* has chipped away.

358 *l zhmn*

By *zhmn*

The text is written near the top of the rock.

359 *l s¹yr°h bk[rt]*

By *s¹yr°*is the young female camel

Written down between the legs of the camel to which it refers. There is hammering over the *r* of the name although traces of the outline of the letter remain. There is a chip in the rock after *k* and I have restored a *r* and *t*. For this formula referring to drawings, see Ch.4.B.1.

360 *l l̲t̲*

By *l̲t̲*

To the right and below KJC 258. The grid of the *t̲* has been filled in.

361 *[h] d̲s²ry (l) (ʾ)mn*

[O] *d̲s²ry* [grant ?] to *ʾmn*

The rock is chipped before the *d̲* but a short stroke, probably the tail of a *h* remains. The *l* is a short line, the hook is probably obscured by the following chip. One of the forks of the *ʾ* is obscured by damage to the rock. For this type of prayer, see Ch.4.C.3.

361a *l ʿmr*

By *ʿmr*

Written directly on from the end of KJC 361.

362 *w dʿt lt rfd w mṯy (ḫ)ṭ̊ṭ̊*

And may *lt* call *rfd*, and *mṯy* is [the] inscriber

The *f* of *rfd* is a straight line with two hooks facing towards the beginning. The second part of the inscription is written down parallel to the right of the first. The rock is chipped at the end and only parts of the letters *ḫ*, *ṯ* and *ṯ* remain. For this type of prayer, see Ch.4.C.2.

363 *l -lt*

By *-lt*

There is an arm showing of the second letter, the rest has chipped away.

Cdr 207 A camel acknowledged by *s¹yr* the author of KJC 359.

CCLVIII An enormous boulder with a natural basin in the centre. The inscriptions are written on the rock surfaces around the basin.

At the west end of the basin, facing north.

364 *l ḫgs²t*

By *ḫgs²t*

The name is not in HIn and the root is problematic. Perhaps the fourth letter should be emended to *l* (see the Index of names for *ḥglt*) although it does not have a hook.

Written on the southern side of the basin, facing north.

365 *l ġlb*

By *ġlb*

There is a more recently inscribed wiggley line after the name. *ġlb* occurs in KJC 368 on this rock and in KJC 395 on the east face.

366 *l kzn*

By *kzn*

The name is not in HIn.

367 *l ḥ(r)ḍ*

By *ḥ(r)ḍ*

The *r* is almost completely covered by later hammering.

368 *l ġlb (b)n s²b-*

By *ġlb* son of *s²b-*

One arm of the *b* of *bn* is lost because of a crack in the rock. The name *ġlb bn s²by* occurs in KJC 395 on the east face of the rock and perhaps a *y* should be restored at the end. *ġlb* also occurs in KJC 365.

369 *w ds²r l hm*

And [may] *ds²r* [grant ?] to *hm*

Recent doodling has been hammering between the *h* and the *m* which might cover a further letter of the name as might the hammer marks after the *m*. See Ch.4.C.3 for this type of prayer.

370 *l ʾs¹mnt bn ḥrm bn mtr*

By *ʾs¹mnt* son of *ḥrm* son of *mtr*

The inscription is written in a loop inside the horns of a pecked ibex. See Index a for other occurrences of *ʾs¹mnt bn ḥrm*. The author of KJC 372 on this rock might be *ʾs¹mnt*'s cousin, see Ch.5.C.2, genealogy 2.

371 *l ʾnʿm*

By *ʾnʿm*

Written to the left of KJC 370.

372 *l ʾnʿm bn brd*

By *ʾnʿm* son of *brd*

The text is written n a curve. For other occurrences of the names see Index a and see KJC 370 on this rock.

373 *grṭʿ ?*

The letters are inscribed in the same technique and are the same colour as a zig-zag line drawn above. Their patina is much lighter than the inscriptions on the rock and possibly they are a later attempt at copying Hismaic. letters.

On the east side of the basin, sloping west towards the basin.

374 *l ṣhbt*

By *ṣhbt*

There is some doodling or possibly a *wasm* between this and KJC 375.

375 *l ḫlṣt*

By *ḫlṣt*

Above and to the left of KJC 374.

376 *l ḥg*

By *ḥg*

Above and to the left of KJC 375.

377 *l ʿbʾ*

By *ʿbʾ*

To the left of KJC 376. The name is not in HIn.

378 *l ʿbd bn s¹yr*

By *ʿbd* son of *s¹yr*

To the left of KJC 377. For other occurrences of *ʿbd bn s¹yr*, see Index a. The circle of the *y* has been filled in.

379 *l hnʾ*

By *hnʾ*

To the left of KJC 378.

380 *l ʾrs² bn ʾftḥ*

By *ʾrs²* son of *ʾftḥ*

The name *ʾrs²w* is written in Habataean to the left of the inscription.

Nab. 1 *ʾrs²w*

The name is previously attested in Nabataean (Cantineau 1932: 67). KJC 380 is written by someone called *ʾrs²*.

381 *l ʿbr*

By *ʿbr*

Written to the right of the patronymic of KJC 380. The *l* and *b* are deeply cut. The *ʿ* is a small indistinct circle and the *r* is written in shallow hammer marks.

382 *ġtb*

Written below the end of KJC 380. The *ġ* and *t* are deeply cut and the *b* directly hammered and ill-formed. There is no initial *l* at the beginning of the text. Perhaps it was left out as there is a crack before the *ġ* and not much space. See Ch.4.A.4. The name is not in HIn.

383 *l (m)s¹ᵒʿd*

By *(m)s¹ᵒʿd*

The reading is doubtful. All that remains of the *m* is part of a curve. The rest has been hammered over and has chipped away.

384 *l knn*

By *knn*

There is an indirectly hammered *l* of pinkish white patina to the left and above the inscription. The name *knn* is only previously attested in Qat. and Sab.

On the north side of the basin, sloping south towards it.

385 *l ḥryʾbn s¹ʿd*

By *ḥryʾ* son of *s¹ʿd*

386 There are traces of letters under hammer marks above and to the right of KJC 385.

387 *l ʾnʿm*

By *ʾnʿm*

On the north side of the basin, sloping away from it to the north.

388 *l k*

By *k*

Above and to the right of KJC 387. It is possibly a false start at KJC 389. There is a line, possibly an unfinished cartouche, above the letters.

389 *l khl bn s¹ny*

By *khl* son of *s¹ny*

For other occurrences of the name, see Index a.

390 *l g ʿṯm*

By *g ʿṯm*

To the left of KJC 389.

391 *l ʾṣlḥ bn ngʾ bn qnt*

By *ʾṣlḥ* son of *ngʾ* son of *qnt*

bn ngʾ bn qnt is written on a horizontal surface slightly below the first name. For other occurrences of *ʾṣlḥ bn ngʾ*, see Index a.

392 *l whbʾl*

By *whbʾl*

To the right of the first name of KJC 391.

Cdr 209 There are traces of drawings, two *wusūm*, several hammer marks and unidentified shapes on the rock. The latter are mostly of a whitish or orangey white patina. There are the horns of an ibex above the end of KJC 369 and an ibex with a partially damaged body and long horns inside which is written KJC 370. Above KJC 380 is a directly hammered creature of browny patina with no distinct head.

East

393 *l (ʿ)rs¹*

By *(ʿ)rs¹*

One side of the circle of the ʿ is lost because of a crack in the rock. The *r* has been hammered over.

394 *l qṯ bn t(m)*

By *qṯ* son of *t(m)*

The *m* has been hammered over and filled in.

395 *l ġlb bn s²by*

By *ġlb* son of *s²by*

See KJC 365 and 368 on the horizontal surface of this rock.

396 *l ʾrs² bn fṭ*

By *ʾrs²* son of *fṭ*

fṭ is not in HIn. *ʾrs² bn ʾftḥ* occurs in KJC 380 on the top of this rock and in KJC 269 and 576. It is possible that the same name was intended here but, having left out the ʾ and the *t*, the author did not bother to emend the text or complete the *ḥ* by giving it a tail.

397 *l k*

By *k*

Below KJC 394-395. The text is unfinished. Possibly it is an abandoned attempt at writing KJC 398.

398 *l kzy°*

By *kzy°*

The tail of the *y* is unusually long and shallower than the rest of the letter, perhaps it is extraneous and an *ʿ* should be read. Neither *kzy* or *kzʿ* are in HIn.

399 *l ʿn*

By *ʿn*

The same letters written in lighter hammer marks are repeated above. Possibly they are a later copy of this inscription.

400 *l ʿmrʾl*

By *ʿmrʾl*

There is no KJC 401.

CCLIX South

402 *l n̊gf ḥ ʿlrl̊°-mr*

By *n̊gf* ???

The *n* might be an incidental hammer mark. The arms of the *r* have been extended by shallow hammering. The ninth letter is chipped, it might be a *l*, although the hook would be an exaggerated curve. There is room for another letter between it and the following *m*.

403 *l ʾtr*

By *ʾtr*

Cdr 211 An ibex below KJC 402, the head is partially damaged.

CCLX East

404 *l s¹ʿd*

By *s¹ʿd*

Cdr 212 The *d* of KJC 404 has been changed into a camel. The letter has been used as the body and hump, and a tail, legs, neck and head have been added. For other examples of inscriptions being turned into drawings, see KJC 132 and KJC 431.

CCLXI Northeast

405 *h ḏs²ry l ʾgd s¹ʿd*

O *ḏs²ry* [grant ?] to *ʾgd* good fortune

= KJPr 7

For this type of prayer, see Ch.4.C.3. *s¹ʾd* cf. Ar. *saʾd* 'good fortune'.

406 *l knn*

By *knn*

= KJPr 8

The name *knn* is only previously attested in Qat. and Sab. See Index a for other occurrences at these sites.

407 *l ʾmn*

By *ʾmn*

= KJPr 9

CCLXII Southeast, sloping inwards. The distance between KJC 408 and 410 is not drawn to scale on the facsimile. They are much further apart.

408 *w rfd ḫṭṭ w ʿl*

And *rfd* is the inscriber of an ibex

See Pl.XIIb.

The initial *w* is an infilled circle with a cross in it. The *r*, the loop of the *d* and the ʿ have been filled in, see Ch.E.2. The final letter *l* is written in the opposite direction to other

letters of the text. See Ch.4.B.2 for this formula used for the authorship of drawings. The ibex referred to is above the inscription.

409 *l rms*[1]

By *rms*[1]

See Pl.XIIb.

410 *l lt*

By *lt*

The text is above and to the right of KJC 408-409. There is a picture of an archer next to it which was perhaps drawn by *lt*.

411 *l br*

By *br*

Written below KJC 410.

411a *l rm*

l rm

The letter I have read as *l* is inscribed rather far from the *r*. The text and Cdr 213a are inscribed close to ground level and there are small boulders wedged in front of the rock face.

Cdr 213 (a) An ibex with patches on its body in relief, drawn by *rfd* the author of KJC 408. There is an arrow embedded in its stomach. To the right of KJC 409 is a straight line with two arms, see a similar sign to the left of KJC 413 and Ch.6.B.

(b) On the right hand corner of the rock face is a picture of an archer which was probably drawn by *lt*, the author of KJC 410.

(c) At the bottom of the rock to the left of KJC 411a is a drawing of a man with a rectangular body. One of his arms is raised and the other obscured by a chip. To the right is a drawing of a dog.

East

412 *l* ʿ

By ʿ

The text is unfinished.

413 *l ms²*

By *ms²*

To the left is a line with two arms, cf. Cdr 213a.

414 *l ʿn*

By *ʿn*

CCLXII Northeast

415 *l bnbs¹r*

By *bnbs¹r*

The name is not in HIn. For other occurrences at these sites, see Index a.

CCLXIII Northeast

416 *l ġrṭm*

By *ġrṭm*

The name is not in HIn. See Index a for other occurrences at these sites.

417 *bn*

bn

Nothing else has been inscribed. It could be the name *bn*, see Ch.4.A.4.

418 *rb s¹qm b ġnṯ*

ġnṯ feels much sickness

For this type of love text, see Ch.4.E.1.

419 *l grf*

By *grf*

420 *l rks¹*

By *rks*[1]

CCLXIII Southeast

421 *l tm*

By *tm*

422 *l ḫ̊m -*

By *ḫ̊m -*

The text is doubtful. There is possibly another letter after the *m*.

Cdr 214 A damaged drawing of an archer and a dog attacking an ibex.

CCLXVII Horizontal

423 *l ʾḥls*[1]

By *ʾḥls*[1]

The name is not in HIn. See Index a for other occurrences at these sites.

Cdr 220 A stick ibex with a long body and horns. Above is a dog running and, to the right, is a drawing that looks as though it was originally intended to be an ibex of which only the horns and body was completed.

CCLXVII Northwest

424 *l rms*[1]

By *rms*[1]

CCLXX Horizontal

425 *l ʿrhz*

By *ʿrhz*

426 *l mb ʿl*

By *mbʿl*

The name is not in HIn. See Index a for other occurrences at these sites.

427 *l ʿmrn̊*

By *ʿmrn̊*

The penultimate letter might be a *b* in which case the text would read *l ʿmr bn*.

428 *l gḫfl*

By *gḫfl*

One of the circles of the *g* is obliterated.

429 *l ʿnl*

By *ʿnl*

Cdr 223 There are two camels to the right of KJC 428, possibly drawn by *gḫfl* the author of the inscription.

CCLXXIII North

430 *l s¹lm b*

By *s¹lm* -

The text is unfinished. The *m* is a loop without an indentation. The letter I have read as *b* has a line protruding from the back. It is shallower than the curve of the *b* and is most probably extraneous.

CCLXXVI East

431 *l lʾm*

By *lʾm*

The *m* has been changed into an ibex. cf. KJC 132 and 404.

432 *l qnlh*

By *qnlh*

The name is not in HIn. See Index a for other occurrences at these sites.

Cdr 228 The *m* of KJC 431 has been later re-used as the body of an ibex. Four legs, a tail, horns and a head have been added. There is a crudely drawn figure with his arms in the air to the right. To the left of KJC 432 is a camel and rider holding a rein and a stick. There is a hooked line above, which could be a Hismaic *l*. The drawing was most probably inscribed by *qnlh*, the author of KJC 432.

CCLXXVII West

433 *l ʿṯft bn s¹yr*
By *ʿṯft* son of *s¹yr*
ʿṯft is not in HIn.

434 *l ġs¹m*
By *ġs¹m*

CCLXXXII North

435 *m ʿṯr ʿs²q ws²ḏ*
m ʿṯr is the lover of *ws²ḏ*
This is the only Tham.D text found at these sites.

436 *l ʿbd*
By *ʿbd*
The *d* is written facing the beginning of the text and the protruding lines are bent round facing the same direction as the loop.

436a *l mly*
By *mly*
There is a circle hammered to the right of the inscription and it is possible the name should be read *m ʿly*. Since the technique of inscribing is different from the other letters I have read *mly*.

437 *l ʿbdt*

By *ʿbdt*

438 *l ʿwr bn ʾmrt bn s¹lm*

By *ʿwr* son of *ʾmrt* son of *s¹lm*

The *m* of *s¹lm* is rather far from the *l* to avoid a crack in the rock.

439 *l ʾmrt*

By *ʾmrt*

The *m* is a rectangular shape.

Cdr 233 To the left of KJC 436 is a man holding his arms out horizontally and below KJC 436 is an ibex.

CCLXXXVI South

440 *l ʾs¹lh bn ʿrs¹*

By *ʾs¹lh* son of *ʿrs¹*

It is possible *ʾs¹lh* was the artist of the unfinished drawing to the left.

441 *w ḏ ʾb ḫṭṭ*

And *ḏ ʾb* is [the] inscriber

= KJPr 10

The drawing to which *ḏ ʾb* refers is of a dog chasing an ostrich. The inscription is written curving round the chest and neck of the ostrich. For this formula referring to drawings, see Ch.4.B.2.

Cdr 237 (a) To the left of KJC 440 are the hind legs, tail and partial body of an ibex, probably drawn by *ʾṣlḥ* the author of the inscription.

(b) Below is a seluqi grabbing hold of the tail of an ostrich. The bird has a long back, deep chest and small wings depicted. It was drawn by *ḏ ʾb* the author of KJC 441.

CCXCI Northwest

442 *-ll bn m-ʾktb bn ʿbd*

-ll son of *m-ʾktb* son of *ʿbd*

The rock is chipped at the beginning of the text. There is a chip after the *m* of the second name. There are three equally possibly ways of restoring the name. Either the chip covers a *r* and the name *mrʾktb* should be read where *ktb* is an alternative orthography to the more usual *ktby* (cf. TIJ 28 in Appendix 2) or the name should be interpreted as a compound of *mrʾ* + *ʾktb* with the second *ʾ* assimilated (cf. *mrʾl* in Saf. (HIn: 537) which is most likely to be a compound of *mrʾ* + *ʾl* and see Ch.3.A.5). Alternatively, the chip might obscure a *n* and the name read *m[n]ʾktb*, *mn* + *ʾktb* (cf. *mnʾl* in Saf. (HIn: 567)). IF the reading of *ʾktb* is correct, it would be the first occurrence of the deity in compound names in the dialect. *ʿbdʾktb* occurs in Saf., Naveh TSB A, and, with the article, in Lihyn. Compound names *zdhnʾktb*, JS L 78, 358 and *grmhnʾktb*, JS L 290.

442a *w ʿrs¹ ḫṭṭ bn ḥrs¹ bn ʾs¹lm*

And *ʿrs¹* is [the] inscriber son of *ḥrs¹* son of *ʾs¹lm*

The inscription starts under the stomach of an ibex and curves to the left under the hind legs. *bn ḥrs¹ bn ʾs¹lm* is written vertically down the rock to the left of a camel. *ʿrs¹ bn ḥrs¹ bn ʾs¹lm* occurs in KJA 112. See Index a for occurrences of *ʿrs¹ bn ḥrs¹*. For this formula referring to drawings, see Ch.4.B.2.

442b *h ḏs²ry s¹ ʿd l bṯr*

O *ḏs²ry* [grant] good fortune to *bṯr*

The first six letters are light orangey and the rest a browny black. The *l* is a straight line. The first letter of the proper name is a short, thick and slightly curved line, I have read it as *b*. For this type of prayer, see Ch.4.C.3.

442c *l bys¹*

By *bys¹*

The text is written in careless letters spaced rather far apart and the interpretation is somewhat doubtful. *bys¹* is not in HIn.

443 *l khl bn s¹ny bn gtt bn hml*

By *khl* son of *s¹ny* son of *gtt* son of *hml*

The text is written in a cartouche which is lightly hammered in a different technique to that used for the letters. There are two lines with three crossbars attached to it. It is

similar to the lines arranged in the form of a ladder found with some Safaitic texts, although, in those examples, seven lines are inscribed and here there are only three (see Winnett and Harding 1978: 26). For other occurrences of *khl bn s¹ny*, see Index a.

443a *ʿl*

ʿl

Written to the right of KJC 443. For possible names without an initial particle, see Ch.4.A.4.

Cdr 243 (a) On the left of the rock face is an ibex and a camel drawn by *ʿrs¹*, the author of KJC 442a. To the right of the camel is another ibex which was possibly drawn by him as well.

(b) Below and to the right of KJC 442c is a camel and rider. On the left of KJC 443 is a badly drawn stick horse and rider and to the right a seluqi chasing an ostrich facing up the rock. It is uncertain who drew them.

CCXCIV Southwest

444 *w ftyt ḫṭṭ*

And *ftyt* is [the] inscriber

The inscription is written around the right side of a drawing. For the formula referring to drawings, see Ch.4.B.2.

Cdr 246 An archer shooting an ibex. An arrow is embedded in the animal's stomach. The ibex has a possible beard and feet depicted. A seluqi is attacking it from underneath, three claws are depicted on three of its feet, on the fourth, there are ill-defined. *ftyt* the author of KJC 444 drew the composition.

CCXCV East

445 *l gs²m*

By *gs²m*

The inscription is written in a cartouche with an ibex.

Cdr 247 An ibex with long legs and shortish horns drawn by *gs²m* the author of KJC 445.

CCXCVI Southwest

446 *l ʿbdlh*

By *ʿbdlh*

CCXCIX Horizontal

447 *l ʿ------*

By *ʿ-----*

The letters are carelessly written and it is probably not a serious attempt at writing an inscription. There is a cartouche surrounding them.

CCCIV South

448 *l ʾnʿm bn brd*

By *ʾnʿm bn brd*

Written down from more recent drawings of two camel. For other occurrences of *ʾnʿm bn brd*, see Index a.

449 *l r ʾl*

By *r ʾl*

Above and to the right of KJC 448. The name occurs again in KJC 455 on this rock.

450 *l fṣyt*

By *fṣyt*

KJC 545 on this rock is also by someone called *fṣyt*.

451 *l ʾfl*

By *ʾfl*

The text is written near the top of the rock.

452 *w ʾṣlḥ bn ngʾ bn qnt ḫṭṭ*

And *ʾṣlḥ* son of *ngʾ* son of *qnt* is [the] inscriber

The inscription is written down between the legs of a camel which is the drawing *ʾṣlḥ* is referring to. For another occurrence of *ʾṣlḥ bn ngʾ bn qnt*, see Index a. For the formula, see Ch.4.B.2.

453 *l ʿbd*

By *ʿbd*

The arms of the *d* are bent forwards, the letter is partially damaged by a chip.

454 *w fṣyt ḫṭṭ*

And *fṣyt* is [the] inscriber

fṣyt is probably referring to a drawing of a horse and rider to the right of the text. See KJC 450 also by someone called *fṣyt*, and, for the formula, see Ch.4.B.2.

455 *l r ʾl*

By *r ʾl*

The text is written on the right side of the rock. See KJC 449.

Cdr 253 A camel drawn by *ʾṣlḥ* the author of KJC 452. To the right is a horse and rider probably drawn by *fṣyt* author of KJC 454. The horse's tail fans out at the bottom. Below is an unfinished drawing of a stick animal which probably belongs to the same period. The other drawings are a much lighter patina. On the left side of the rock are two camels, one with one of its front legs slightly bent. Below are two donkeys ? galloping side by side. Below is a man leading a camel and, on the right side of the rock, is a horse and rider carrying a long spear.

CCCV Southeast

457 *l knn bn ʿlṭ*

By *knn* son of *ʿlṭ*

knn is only previously attested in Qat. and Sab. *ʿlṭ* is not in HIn. For other occurrences of *knn bn ʿlṭ*, see Index a.

CCCVI East. See Pl.XIIIa.

458 *l drs¹ bn ḍḥk*

By *drs¹* son of *ḍḥk*

On the top left hand of the rock. The first name is written down the rock, the inscription then turns right and the second name is written up the rock. The *k* is written with two arms facing in the opposite direction to that in which the text reads. cf. KJC 264, which is also written by *drs¹ bn ḍḥk*, where the *ḥ* of *ḍḥk* is written *contra* the stance of the other letters.

459 *l ġnmt*

By *ġnmt*

To the right of KJC 458. *ġnmt* occurs five times on this rock, see, KJC 460, 477, 478, 479.

460 *l ġnmt*

By *ġnmt*

To the right of KJC 459. See KJC 459.

461 *l bnʾb*

By *bnʾb*

To the right of KJC 460. *bnʾb* occurs eight times on this rock, see, KJC 462, 467, 473, 474, 475, 476 and 482. The name is not in HIn.

462 *l bnʾb*

By *bnʾb*

To the right of KJC 461. See KJC 461.

463 *l nhlʿll*

By *nhlʿ*??

To the right of KJC 462. The name is not in HIn.

464 *l mbʿl*

By *mbʿl*

To the right of KJC 463. The name is not in HIn. See Index a for other occurrences at these sites.

465 *l ʿnn*

By *ʿnn*

On the top right side of the rock.

466 *l ḥ*

By *ḥ*

Written below KJC 463. The text is unfinished.

467 *l bnʾ(b)*

By *bnʾ(b)*

To the right of KJC 466. The final *b* is badly formed. See KJC 461.

468 *l nṣrlh*

By *nṣrlh*

To the right of KJC 467. The name is not in HIn.

469 *l ʿlṭ*

By *ʿlṭ*

On the left side of the rock, below the drawing of two horses. The name is not in HIn. See Index a for other occurrences at these sites.

470 *l mḥllt frs*[1]

By *mḥllt* is [the] horse

The text is written down from between the legs of the horse to which it refers. The initial *l* is just legible under a penis that has been added to the drawing of the horse. For this formula, see Ch.4.B.1 and see KJA 113.

471 *w hd ḫṭṭ*

And *hd* is [the] inscriber

The inscription starts between the legs of a drawing of a horse to which it refers. For the formula referring to drawings, see Ch.4.B.2.

472 *l qnft*

By *qnft*

The text is written to the right of KJC 471. The second curve of the *f* has not been completed. The name is not in HIn.

473 *l bnʾb*

By *bnʾb*

The text is written to the right of KJC 472. There is a *l* after the final *b* which is probably a false start at a further inscription. For occurrences of *bnʾb* on this rock see KJC 461. The name is not in HIn.

474 *l bnʾb*

By *bnʾb*

The text is on the right side of the rock below KJC 469. See KJC 461.

475 *l bnʾb*

By *bnʾb*

To the right of KJC 474. See KJC 461.

476 *l bnʾb*

By *bnʾb*

Written to the right of the end of KJC 470. See KJC 461.

477 *l ġnmt*

By *ġnmt*

To the right of KJC 476. See the KJC 459.

478 *l ġnmt*

By *ġnmt*

Written to the right of KJC 477. The *m* and *t* are separated from the rest of the text by the *l* of KJC 479. See KJC 459.

479 *l ġnmt*

By *ġnmt*

The text begins below the *n* of KJC 478. See KJC 459.

480 *w ms¹ʿd ḫṭṭ bn°wfṣ*

And *ms¹ʿd* is [the] inscriber son of *wfṣ*

The text starts between the legs of a horse and rider to which *ms¹ʿd* refers. The *bn* and patronymic are written to the left of the first part of the text. *wfṣ* is not in HIn. The *b* and *n* are a slightly different colour and technique to the rest of the text and it is not certain that they belong. It is possible that the letters *wfṣ* are the start of an unfinished text beginning with an introductory *w*, *w fṣ* 'And *fṣ*-'.

481 *l ʾbn*

By *ʾbn*

To the right of KJC 480. The *ʾ* has been hammered over.

482 *l bnʾb*

By *bnʾb*

To the right of KJC 481. See KJC 461.

Cdr 254 A composition of three horses, two with riders and one with a man standing next to it. The upper drawings were done by *mḥllt*, the author of KJC 470, and *hd*, the author of KJC 471, and the lower one by *ms¹ʿd*, the author of KJC 480. All three horses have heavy bodies and tails fanning out at the bottom with hairs depicted. The dismounted man is carrying a shield, with an inner circle, and larger than the shields depicted elsewhere. He has a sword at his waist and is spearing the rider on horseback. The latter is armed with a sword and carrying a short spear in one hand and holding reins in the other. The lower horseman is holding reins and carrying a sword at the waist. His body has been left in relief and his head is encircled with a band. The spikes coming out from the band might be either a depiction of his hair or a form of head gear.

There is no KJC 483

CCCVII Southwest

484 *l bn(ʾ)b*

By *bn(ʾ)b*

One of the forks of the ʾ has been hammered carelessly giving it the appearance of a *h* or possibly a *ṣ*. *bnʾb* occurs again in KJC 486 on this rock and see KJC 461 for the occurrences of the name on the previous rock. The name is not in HIn.

485 *l ʾmn*

By *ʾmn*

The *n* is a dash rather than a dot.

486 *l bnʾb*

By *bnʾb*

See KJC 484. The name in not in HIn.

487 *l ft(ḥ)t*

By *ft(ḥ)t*

The *ḥ* has not got a tail.

CCCVIII Southwest

488 *l s¹ʿd*

By *s¹ʿd*

489 *l ḥzbr bn ʿbd*

By *ḥzbr* son of *ʿbd*

The *b* and *d* of the last name are written to the left of the ʿ as there is insufficient space before the edge of the rock to continue the inscription in a line. *ḥzbr* is not in HIn. See Index a for other occurrences of *ḥzbr bn ʿbd*.

490 *l yẓr*

By *yẓr*

CCCIX West

491 *l bnʾb*

By *bnʾb*

See KJC 461, 484 and 486 for other occurrences of the name in this area of the site.

492 *l ʾmn*

By *ʾmn*

CCCXII Horizontal

493 *l bn ʿmh*

By *bn ʿmh*

The name is not in HIn. See Index a for other occurrences at these sites.

494 *[l] mš¹ ʿd*

[By] *mš¹ ʿd*

This and KJC 495 are partially covered by a later drawing of an ibex. The *l* is completely covered by a leg of the ibex and only part of the *m* is visible.

495 *l ʿ[r]s¹*

By *ʿ[r]s¹*

Most of the third letter is obscured by the rump of the ibex.

Cdr 257 (a) Four ibex, one is being chased by a dog. To the left of KJC 493 is a loop which is damaged at either end by abrasions. Two men with their arms in the air were noted when recording but they are not visible on the photograph.

(b) There are more recent ibex on the rock as well, one in the left hand corner and the other in the right. The latter has only three legs and obscures parts of KJC 494 and 495.

CCCXIV Southwest

496 *l ʿr*

By *ʿr*

CCCXV North

497 *l* ----

l ????

The letters are carelessly written and badly formed.

498 *h ḏs²ry l ʾmt k-s¹r*

O *ḏs²ry* [grant] to *ʾmt* ---

For prayers of this type, see Ch.4.C.3. The last word is damaged and the interpretation uncertain.

CCCXIX East southeast

499 *l s¹lmʾl*

By *s¹lmʾl*

500 *l hkdn*

By *hkdn*

The name is not in HIn.

Cdr 262 An ibex, a stick man and an unidentified drawing.

CCCXX Northwest

501 *l lʾm*

By *lʾm*

One of the forks of the *ʾ* is slightly damaged.

Cdr 263 Below KJC 501 is a stick animal with one horn.

CCCXXIII South

502 *l qnt bn ʿwḏ bn ʿṯft*

By *qnt* son of *ʿwd* son of *ʿṯft*

The text is written in a semi-circle. There is a circle that has been hammered in on the inside of the inscription.

503 *l ʾʿbdt*

By *ʾʿbdt*

The name is not in HIn. See Index a for other occurrences at these sites.

504 *l sˡʿd*

By *sˡʿd*

Written inside a cartouche.

505 *l yẓr*

By *yẓr*

Cdr 266 There is a loop with a dot in the middle and below a loop that has been filled in. Two horns and the body of an unfinished ibex. To the left and below is a horseshoe shape, possibly a *wasm*.

There is no KJC 506

CCCXXIV Southwest

507 *l dʿʾnln ?*

By ????

CCCXXVII Horizontal

508 *l bgt bn tmʾl bn nht*

By *bgt* son of *tmʾl* son of *nht*

The *l* of the second name is inscribed in a wavy line. *bgt bn tmʾl* occurs in KJC 24.

509 *l tm*

By *tm*

The *m* is small and faces towards the beginning of the text.

CCCXXXV East

510 *l bnlh*
By *bnlh*

CCCXXXVI Northeast

511 *w gml ḫṭ(ṭ)*
And *gml* is [the] inscriber
The inscription is written to the left of the camel to which it refers. Only part of the final *ṭ* has been completed. For the formula, see Ch.4.B.2.

Cdr 275 A small neatly inscribed camel drawn by *gml* the author of KJC 511.

CCCXXXVII East

512 *l ʾrs²lh*
By *ʾrs²lh*
The name is not in HIn. See Index a for other occurrences at these sites.

CCCXXXVIII Southeast

513 *l fr*
By *fr*

There is no KJC 514.

CCCXLV Horizontal

515 *l ʾṣlḥ*
By *ʾṣlḥ*

CCCXLVI Northwest

516 *l ʿrs¹ bn ḥrs¹*

By *ʿrs¹* son of *ḥrs¹*

Below the *ʿ* is a further *b*, perhaps the author was going to continue the text and then changed his mind. See Index a for other occurrences of *ʿrs¹ bn ḥrs¹*.

CCCXLVIII Southwest

517 *l ḏ ʾb ḫṭṭ*

By *ḏ ʾb* is [the] drawing

To the right of a very damaged drawing of an archer. The position of the word *ḫṭṭ* is somewhat ambiguous. It might belong to this inscription or to KJC 518 by *s¹yr*. For this formula referring to drawings, see Ch.4.B.1.

518 *l (s¹)yr*

By *(s¹)yr*

The *s¹* is partially damaged. See KJC 517.

519 *l ṯfnt*

By *ṯfnt*

The second letter is partially covered by abrasions. Below is a *l*, possibly a false start at an inscription. The name is not in HIn.

520 *l ḥ*

By *ḥ*

Written to the right of KJC 519. The text is unfinished.

521 *l s¹ ʿd*

By *s¹ ʿd*

The *d* is damaged by chipping on the rock, however, the reading is clear.

Cdr 282 Two men in combat, most of the left hand is damaged by chipping. An arrow is depicted in flight and two others embedded in the arm and thigh of the man on the right. He is holding a bow in one hand and a shield in the other and has a sword at the waist. Below is another archer with later lines added to the drawing. The man is carrying a sword at the waist and

there is an arrow embedded in his chest. There is a loop going from one foot to the knee ?. To the left of KJC 521 is another archer, he is armed with a sword and there is an arrow piercing one of his legs. *ḏ ʾb* the author of KJC 517 and *s¹yr* the author of KJC 518 were probably co-artists although the other authors on the rock might have participated as well.

Southeast

521a *l n*

By *n*

The text is unfinished. There is no facsimile.

CCCXLIX Horizontal

522 *l ʿrs¹ bn ḥrs¹ bn ʾs¹lm bn ms¹lm*

By *ʿrs¹* son of *ḥrs¹* son of *ʾs¹lm* son of *ms¹lm*

bn ḥrs¹ is written below the first name. The *bn* of the third name is written below the first *bn* and then the text continues around to the right. For occurrences of *ʿrs¹ bn ḥrs¹ bn ʾs¹lm* see Index a.

523 *l r ʿnrmʿ ?*

l ????

Cdr 283 A camel and rider with reins depicted.

CCCLII East

524 *l khl*

By *khl*

525 *l [] bnṣrlh*

By *[] bnṣrlh*

There is a short stroke between the *l* and *b*. The name is not in HIn. It occurs again in KJC 525.

526 *l ʿbd*

By *ʿbd*

To the right and above KJC 525.

527 *l tḥbb*

By *tḥbb*

The inscription is surrounded by a lightly hammered cartouche.

528 *l ḥfẓ*

By *ḥfẓ*

The first two letters are black and the last two light orangey.

529 *l bl°--*

By *bl°--*

There is hammering after the third letter.

530 *l rms¹*

By *rms¹*

530a *l b*

By *b*

On the upper surface of the rock. The text is unfinished.

Cdr 285 A camel drawn in outline some distance to the left of KJC 530a. There is unidentified hammering above KJC 524-530.

CCCLIII Northwest

531 *l s²tr ʿ ʾfln*

????

CCCLV North. See Pl. XIIIb.

532 *l bn ʾb*

By *bn ʾb*

On the left of the rock. The name is not in HIn. It occurs again in KJC 533, 536 and 536 on this rock and see Index a for other occurrences at these sites.

533 *l bn ʾb*

By *bn ʾb*

Not in HIn. See KJC 532.

534 *l m*

By *m*

Written above KJC 533. The text is unfinished.

535 *l kms*$^{t\circ}$

By *kms*$^{t\circ}$

The *s*^{t} has not got a tail. The name is not in HIn.

536 *l bn ʾb*

By *bn ʾb*

Written below KJC 535. See KJC 532.

537 *kbl*

kbl

The text is written over a ridge in the rock, to the right of KJC 536. See Ch.4.A.4 for possible names without an initial particle.

537a *l bn ʾb*

By *bn ʾb*

The name is not in HIn. See KJC 532.

CCCLV Horizontal

538 *l ms*^{t} *ʿd*

By *ms*^{t} *ʿd*

This and the following five texts are written inside a cartouche.

539 *rb s²q w s¹qm w s¹rr b hd ʾl nʿrt w ġlmt w bkrt w ʾrḫl w s¹lʿt w hd bn s¹mʿn ḫṭṭ*

hd feels much desire and sickness and happiness towards young girls and young women and maidens and young girls and 'women', and *hd* son of *s¹mʿn* is [the] inscriber

The text begins at the top left of the cartouche and winds round in a zig-zag. The letter I have read as *b* of *bkrt* looks more like a *r*. The *r* of *ʾrḫl* was originally left out and has been added slightly below the *ʾ* and *ḫ*. For love texts of this kind, see Ch.4.E.1. The occurrence of a clearly plural form in *ʾrḫl* suggests that all the substantives after the preposition *ʾl* 'towards' (Ar. *ʾilā*) are feminine sound plurals rather than singular forms. *nʿrt* 'young girl', Heb. *nᵉʿara*; *ġlmt* 'young woman', Ar. *ġulāmah*; *bkrt* 'young girl', Ar. *bakrah*; *ʾrḫl* 'ewes', cf. Ar. *riḫl*, pl. *ʾarḫul*, the word might refer to female sheep or by extension 'young women'. The root *slʿ* in Ar., Heb. and Syr. has the meaning cleave and Ar. *silʿ* is a 'cleft, fissure' perhaps denoting here the female genitals. For the phrase *w* N *ḫṭṭ* at the end, see Ch.4.G.(3).

540 *l rms¹*

By *rms¹*

Written between two lines of KJC 539.

541 *l b*

By *b*

An unfinished text inscribed between the word *nʿrt* and the *t* of *ġlmt* of KJC 539.

542 *l g*

By *g*

Below KJC 539. The text is unfinished. The similarity of the infilling of the *g* with that in texts by *gs²m* on this rock (KJC 544, 546) suggests he might have started to write his name here.

543 *l ftyt*

By *ftyt*

Written directly on from the end of KJC 539. There is a slight gap between the *y* and *t*.

Southwest

544 *l gs²m*

By *gs²m*

Written below the cartouche surrounding KJC 538-543. The letters are joined by a line running through the middle to the *m*. The name occurs again in KJC 546 on this rock.

545 *l s²*

By *s²*

To the right of KJC 544. The text is unfinished.

546 *l gs²m*

By *gs²m*

See KJC 544.

547 *l ġnmt*

By *ġnmt*

CCCLVI East

548 *l gs²m*

By *gs²m*

See KJC 544.

CCCLVII North

549 *l ġ*

By *ġ*

The tail of the *ġ* curls back to join the *l*. The text is unfinished.

CCCLVIII Northeast

550 *l grm*

By *grm*

550a *l g*

By *g*

One circle of the *g* has been filled in. The text is unfinished. Possibly *grm* of KJC 550 was going to inscribe his name again.

550b *l ʾfl*

By *ʾfl*

CCCLIX Southeast

551 *l ʿwḏ*

By *ʿwḏ*

CCCLX West

552 *l s² ʿṯ ʿ*

By *s² ʿṯ ʿ*

The letters are crudely hammered. One line of the grid of *ṯ* is covered by a chip. The name is not in HIN.

CCCLXI Northeast

553 *l knn[ ]*

By *knn[ ]*

There are three dots after the *k*, two are inscribed one above the other inside the arms of the *k* and the third, after them. *knn* is only previously attested in Qat. and Sab.

554 *l s²brmt*

By *s²brmt*

The name is not in HIn. It occurs as well in KJB 107.

555 *h ḏs²ry l m ʿz s¹ ʿd ngy w ṯry*

O *ḏs²ry* [grant] to *m ʿz* good fortune of deliverance and sufficiency

The text is written down the rock and then turns in a loop up. For the form of the prayer, see Ch.4.C.3. The expression of *s¹ʿd ngy* is a construct. For other occurrences of the substantive *s¹ʿd*, see KJC 405 and 442b; *ngy*, cf. Ar. *najāʾ* 'deliverance'; *try*, cf. Ar. *tarāʾ* 'sufficiency', the word occurs again in KJC 729.

Cdr 287 To the left of KJC 553 is an ibex and below KJC 555 is another one.

CCCLXII Horizontal

556 *l f-*

By *f-*

There is a dash after the *f* which is possibly the beginning of a third letter.

CCCLXIII North

557 *l hnʾlh*

By *hnʾlh*

558 *l gs²m*

By *gs²m*

Cdr 288 A man with a shield and to the right a man shooting a bow. The name of the artist *gs²m* is inscribed between them.

CCCLXIV Southeast

Two modern Arabic inscriptions. There are no diacritical points.

CCCLXV Horizontal

559 *(l) (g)(ḥ)(f)l*

By *(g)(ḥ)(f)l*

The text is damaged at the beginning. Part of the initial *l* has chipped away and only a circle of the *g* remains. The tail and spine of the *ḥ* have been lost.

CCCLXVII Northeast

560 *l mrḫ°*

By *mrḫ°*

It is possible the last letter is a *t*. The name is not in HIn.

CCCLXIX Northeast

561 *l ḏ ʾb*

By *ḏ ʾb*

562 *l ḥs²s²*

By *ḥs²s²*

There is a further line to the left of the text. It is possible that the name should be read *ḥll*.

563 *l bn ʾb*

By *bn ʾb*

The name is not in HIn. See Index a for other occurrences at these sites.

564 *l ʾmn*

By *ʾmn*

565 *l ʾs²ṣr*

By *ʾs²ṣr*

Written directly on from the end of KJC 564. The name is not in HIn. See Index a for other occurrences at these sites.

CCCLXX Southeast

566 *l ḥ-fnn*

By *ḥ-fnn* ?

The third letter has been filled in.

Cdr 291 An ibex inscribed above KJC 566.

CCCLXXI Horizontal

567 *l yrfn*
By *yrfn*
The name is not in HIn. It occurs in KJC 239 as well.

CCCLXXIII North

568 *l tbr*
By *tbr*

569 *l (m)l*
By *(m)l*
The second letter is a loop and does not have the usual indentation of a *m*.

570 *l ʾr ʿt*
By *ʾr ʿt*

Cdr 293 Two camels. The top right hand one has a line which is shallower than the rest of the drawing between its two front legs. The bottom one has a line extending from its shoulders.

CCCLXXIV Horizontal

571 *l ʿyl*
By *ʿyl*

CCCLXXVI West

572 *l blsr° bn rḫmt*
By *blsr°* son of *rḫmt*

The fourth letter is damaged and is not facing in the direction of the text. Neither of the names are in HIn.

CCCLXXVII Horizontal, a loose boulder

573 *l ʾrs² bn ʾftḥ*

By *ʾrs²* son of *ʾftḥ*

The text runs into the end of KJC 574. For other occurrences of *ʾrs² bn ʾftḥ*, see KJC 269 and 380.

574 *l ḏbʿn bn ʿbdʿbdt*

By *ḏbʿn* son of *ʿbdʿbdt*

ʿbdʿbdt is not in HIn.

575 *l kmy bn tmlh*

By *kmy* son of *tmlh*

kmy bn tmlh occurs in KJA 132.

576 *l hnʾ*

By *hnʾ*

576a *l-ʿ--*

By-ʿ--

The text is badly damaged.

577 *l s¹d*

By *s¹d*

The name is not in HIn.

578 *l lhm---*

By *lhm*

The text has hammering going through it and the last three letters are uncertain.

579 *l ḫg*

By *ḥg*

The *l* and *g* are roughly hammered whilst the *ḥ* is well-formed.

CCCLXXIX West

580 *l ʾs¹mnt*

By *ʾs¹mnt*

There are two curved lines to the right of the text below which the rock has chipped away. It is probably all the remains of a drawing of an ibex.

CCCLXXXIII North

581 *l whbl*

By *whbl*

Hammering joins the *b* to the *l*.

CCCLXXXV East

582 *l ʿrhz b*

By *ʿrhz* -

The final letter is probably a *b* although one arm is rather long. Possibly *ʿrhz* was going to continue with his father's name and then abandoned the text.

CCCLXXXVI North

583 *l ʿs²*

By *ʿs²*

The letters are arranged in a circle. It is possible the *s²* is a line of an unfinished letter.

583a *l ḥfẓ*

By *ḥfẓ*

584 *l ʿ*-

By ʿ-

The rock is chipped after the ʿ

585 *l grf*

By *grf*

CCCLXXXVII North. See Pl.XIVa.

586 *l ṯyft*

By *ṯyft*

On the left side of the rock.

587 *l ḏ ʾb*

By *ḏ ʾb*

To the right of KJC 586.

588 *l m ʿs¹ bn ʾdd*

By *m ʿs¹* son of *ʾdd*

To the right of KJC 588.

589 *l drg*

By *drg*

Above the text there is another inscription which has been completely hammered out.

590 *nykº-- --r ʾt ks¹by bṣ fʾ lḥgbhns²mm*

--- had sex repeatedly with a woman ------

I cannot translate this text satisfactorily but it may be worth mentioning some of the possibilities and difficulties. The first word *nyk* is clear despite the fact that the tail of the *k* is slightly curved, and probably the rest of the inscription is related to love or sexual activity. The name of the subject of the verb is covered by hammer marks as is the first letter of the object which I would restore as *m* and read *mr ʾt*, Ar. *mara ʾah* 'woman', which occurs in KJA 20 and KJB 129. The *s¹* of the next word has been left out and is written to the right of the *k*. The next letter is probably a *b* although the curve is not as pronounced as the other *b*'s in the text. I am

inclined to read the word *ksʾlby* as a name either of the woman or in construct with *mrʾt* 'the wife of *ksʾlby*'. *ksʾlby* is not in HIn.

There are several possible divisions of the following letters and none of them are altogether satisfactory. One alternative is to read *bṣ* and translate it from Ar. *bayṣ* 'difficulty', here as an adverbial particle 'with difficulty', cf. my suggestion for *ʿṣ* in KJA 28. A second alternative would be to divide the letters *b ṣfʾ* where *b* would be the infinitive noun *safāʾ* of the verb *safā* meaning 'happiness, joy'. *b* would be the preposition 'with' and the phrase would translate as 'with happiness'. I cannot see with either of these how the rest would translate.

CCCLXXXVIII Northeast

591 *l ṣʿdt*

By *ṣʿdt*

The *ṣ* is joined to the *ʿ*. There is a second loop inscribed on to the *d* which has been used to join it to the *t*.

592 *l bny*

By *bny*

Above KJC 591.

593 *l ʿrhz*

By *ʿrhz*

Below and to the right of KJC 592.

CCCLXXXIX Northeast

594 *l ʾʿbdt*

By *ʾʿbdt*

The name is not in HIn. See Index a for other occurrences at these sites.

595 *l ṭgdʿ*

By *ṭgdʿ*

The letter at the end is a unusual shape being a circle with two lines protruding. It might be a *d* or an unfinished *w*. The name is not in HIn.

596 *l ʾṣlḥ*

By *ʾṣlḥ*

Cdr 300 Two ibex to the left of the inscriptions.

CCCXC Northeast

597 *l ʿl bn nhk*

By *ʿl* son of *nhk*

The letters are crudely inscribed. The *b* has a deep curve, the *h* has a small fork and the arms of the *k* are somewhat curved. There is a *m* above the s^1 which might be a letter that has been left out of the text and, perhaps, the first name should be read *ʿlm*, although the letter is rather far away to be certain of this.

CCCXCI West, a loose boulder

598 *l r ʿ(y)*

By *r ʿ(y)*

The tail of the *y* is slightly obscured by a chip.

599 *l r--*

By *r--*

The rock is chipped after the *r*.

600 *l m--*

By *m--*

Only a curve remains of the second letter. It might be a *m*. The rock is chipped after it.

601 *l* bs^2

By bs^2

To the left of a drawing of a camel. The name is not in HIn. It is possible the text is unfinished.

602 *l drg*

By *drg*

The text is written below KJC 601.

603 *l ḫrm*

By *ḫrm*

Following on from the end of KJC 602. Part of the *m* is lost under hammering and rubbing.

604 *l ġfrt*

By *ġfrt*

Inscribed across the end of KJC 603.

605 *l ḫrs¹*

By *ḫrs¹*

Below KJC 604.

606 *l s¹hr*

By *s¹hr*

On the right hand side of the rock. There is a line going from the *s¹* to the *h* giving the latter letter the appearance of a *ḫ*.

607 *l ʿ*

By *ʿ*

The text appears to be unfinished. There is a line to the right of the *ʿ*.

608 *l bn ʿmh*

By *bn ʿmh*

The name is not in HIn. See Index a for other occurrences at these sites.

Cdr 301 The central part of the rock has been smoothed and worn by rubbing. A camel and rider with a rein and a stick depicted. Below is part of the body and hind legs of an animal.

Vertical west edge

609 *l kmʾt*

By *kmʾt*

The name is not in HIn. It occurs in KJA 259 and 657 as well.

610 *l wḥf*

By *wḥf*

Written horizontally on the top left side of the rock.

611 *l bntrb*

By *bntrb*

Written from right to left under KJC 610. The name is not in HIn. It occurs again in KJC 611, 640.

612 *w l*

Written below the final *b* of KJC 611. The letters might be the start of a text, see Ch.4.B.3, or a continuation of KJC 611.

613 *l grf*

By *grf*

Written vertically down the rock to the right of KJC 610-611.

614 *l gs²(m)*

By *gs²(m)*

The *m* is badly formed being a circle with a line across the upper part.

615 *l ʿrs¹ bn ḥrs¹*

By *ʿrs¹* son of *ḥrs¹*

The initial *l* and the first name is written on a different surface of the rock and reads in the opposite direction to the rest. See Index a for other occurrences of *ʿrs¹ bn ḥrs¹*.

CCCXCII West

616 *l y*

By *y*

The text is unfinished. There is a *l* to the left.

617 *l k*

By *k*

The text is unfinished. There is a *l* above and to the right and a *h* below and to the right.

618 *l gs²m*

By *gs²m*

618a *b̊d*

b̊d

Written to the right of KJC 618. See Ch.4.A.4 for possible names without an initial particle.

Cdr 302 A camel and rider most probably drawn by *gs²m* the author of KJC 618.

CCCXCV West

619 *l gl*

By *gl*

The two *l*'s have been written facing towards each other. One of the circles of the *g* is shallower than the rest of the letter.

CCCXCVI Horizontal

620 *l ns²l bn zrt bn nw(y)*

By *ns²l* son of *zrt* son of *nw(y)*

The rock is chipped at the end and only half of the *y* is visible.

621 *l nr nn̊*

By *nr nn̊*

The second *n* is a slightly larger dot than the others. The name might read *nrn* but it is more likely the text is unfinished.

622 *l (g)s²m*

By *(g)s²m*

Part of the *l* and one of the circles of the *g* has been hammered over and filled in and part of the *m* is chipped away.

CCCXCVII North northeast

623 *l hnʾ*

By *hnʾ*

CCCXCVIII Northeast

624 *l whblh*

By *whblh*

CCCXCIX West southwest

625 *l ʿlṭ*

By *ʿlṭ*

On the left side of the rock. The name is not in HIn. See Index a for other occurrences at these sites.

626 *l b[n]y bn s¹mnn*

By *b[n]y* son of *s¹mnn*

The third letter has completely chipped away. The restoration of *n* is based on the smallness of the gap. *s¹mnn* is not in HIn.

627 *l d*

By *d*

To the right of the *bn* of KJC 626. The text is unfinished.

628 *l bglt*

By *bglt*

The name is not in HIn. See Index a for other occurrences at these sites.

629 *l ʿrs¹*

By *ʿrs¹*

CD North

630 *l ʿyln*

By *ʿyln*

631 *l ʾḫls¹*

By *ʾḫls¹*

The name is not in HIn. See Index a for other occurrences at these sites.

CDa Southwest

631a *l ʿbdʾyb*

By *ʿbdʾyb*

The final letter is a quite different shape from the *b* of *ʿbd*, a feature which occurs in MuNJ 1 which is possibly by the same man. The name is not in HIn. See KJA 168 for another occurrence and Ch.5.A.1.

CDI Northeast

632 *l gs²m*

By *gs²m*

CDII Southwest

633 *l w*

By *w*

The text is unfinished.

Cdr 303a Two camels below KJC 633.

CDIII East

634 *l bnbs¹r bn s²kr*

By *bnbs¹r* son of *s²kr*

bnbs¹r is not in HIn. It occurs in KJA 118 and 634 as well.

635 *l ftyt*

By *ftyt*

636 *l ʿ*

By *ʿ*

The text is probably unfinished although the *l* at the end of KJC 637 might belong to it, the name reading *ʿl*.

637 *l qnlh*

By *qnlh*

For the *l* after the *h*, see KJC 636. The name is not in HIn. See Index a for other occurrences at these sites.

CDV South

638 *l ʾnʿm bn brd bn mtr*

By *ʾnʿm* son of *brd* son of *mtr*

For other occurrences of *ʾnʿm bn brd* see Index a and see Ch.5.C.2, genealogy 2.

639 *l brqs²*

By *brqs²*

Cdr 308 An ibex most probably drawn by *brqs²* the author of KJC 639.

CDX Southwest

640 *l bntrb*

By *bntrb*

The name is not in HIn. It occurs again in KJC 284 and 611.

CDXI Northwest. See Pl.XIVb.

641 *l ʿly bn ʾṣfr mn ʾl mzn w ḏkrt lt ʾs²[y]ʿn kllhm*

By *ʿly* son of *ʾṣfr* from the tribe of *mzn*; and may *lt* remember our companions, all of them

The inscription starts on the right and then curls round inside itself. The *y* of *ʾs²yʿ* has been left out and the *m* of *-hm* at the end is some distance from the previous letter. The tribal affiliation is introduced by *mn* 'from' a form which is not previously attested in the dialect but occurs in Nabataean, see Ch.4.A.1. The tribal name *mzn* occurs in AMJ 138 and *mznytʾ* (fem) occurs in a Nabataean text from *Madāʾin Ṣāliḥ* in Saudi Arabia (Cantineau 1930: 113), see Ch.5.D. For this type of prayer, see Ch.4.C.1.

CDXIII Horizontal

642 *l ʾ(n)ʿm l----m°*

By *ʾ(n)ʿm l----m°*

The line joining the *ʾ* to the *ʿ* obscures the *n*. After the name *ʾnʿm* the text is damaged and mostly illegible.

643 *l m---*

By *m---*

The rest of the text is illegible.

There is no KJC 644.

CDXIII Southwest

645 *l ʾnʿm bn brd*

By *ʾnʿm* son of *brd*

For other occurrences of *ʾnʿm bn brd*, see Index a.

CDXV East. See Pl.XVa.

646 *w ʾn ʾfl*

And I am *ʾfl*

This is the only example among these inscriptions where the phrase *w ʾn* (Ar. *wa ʾanā*), most frequently attested in Tham.C, is used to express simple authorship, see Ch.4.A.5. KJC 647 is possibly written by *ʾfl*'s father.

647 *w ʿbdlg ḏ ʾl gy*

And *ʿbdlg* of the tribe of *gy*

For texts of simple authorship introduced by *w*, see Ch.4.A.3. It is interesting that *ʿbdlg* (Nab. *ʿbdʾlg* etc. and cf. modern *al-Jī* near Petra, see KJC 205 and Ch.5.A.1) is from a tribe with the name *gy* which most probably has the same derivation. The name *ʾfl bn ʿbdlg* occurs in KJC 205 and the two texts on this rock are possibly written by father and son.

Cdr 310a Below the end of KJC 647. An animal ?, four legs depicted, a tail and a head.

CDXVII Southwest

648 *w dʿ ḏs²ry rb°w ḏfrn ḫṭṭ*

And may *ḏs²ry* call *rb°*, and *ḏfrn* is [the] inscriber

The two clauses of the text are written parallel to each other, the beginning is on the right. The rock is chipped after the second name but traces of a *b* remain. For this type of prayer, see Ch.4.C.2. *ḏfrn* is not in HIn. It occurs KJC 53 and KJC 45 as well.

CDXVIII North

649 *s¹mʿt k[tby]*

That *k[tby]* may hear

The text is unfinished. The *s*¹ and *m* are written with a vertical stance in a horizontal text. cf. KJC 46 where the shape of the *m* is similar as well and see Ch.2.H. For this type of prayer, see Ch.4.C.4.

CDXIX Northwest

650 *l ḏ ʾb*

By *ḏ ʾb*

CDXX Southeast

651 *l ʿrs*¹

By *ʿrs*¹

652 *l s*¹*l b--*

By *s*¹*l --*

The rest of the text is damaged. There are several probably letters to the left but I cannot make sense of them.

CDXXIII West

653 *l ġtm*

l ġtm

654 *l s*²*ṣr*

By *s*²*ṣr*

CDXXV Horizontal

655 *l t--*

By *t--*

Some of the *t* is chipped away and the rest of the text is lost.

656 *l -- bn s*¹*(ʿ)r*

By -- son of *s¹(ʿ)r*

The first name is damaged although traces of letters remain. The *ʿ* is partly obscured by a chip.

Cdr 314 The outline of an animal ?.

CDXXVII North northeast

657 *l kẖmʾt*

By *kẖmʾt*

The *l* has been joined to the *k* and the arms of the *k* are joined to form a loop. The name is not in HIn. It occurs in KJA 259 and 609 as well.

658 *w tmlh ḫṭṭ*

And *tmlh* is [the] inscriber

For this formula used to express simple authorship, see Ch.4.A.2.

659 *ny(k) ʾmh mn s²h rʾ s¹fr*

ʾmh had sex repeatedly with *mn* desiring the sight of beauty ??

The text begins below KJC 657 and curves down the rock. The last three letters turn sharply upwards. The reading of the *k* is doubtful as the tail is indistinct. *s²h* cf. Ar. *šāhⁱⁿ* 'desiring'; *rʾ* cf. Ar. *raʾy* 'sight', the word occurs in an unpublished 'love' prayer HS 950. The word *sāfir* in Ar. is used of a woman having her face uncovered which would be inappropriate here, Syr. *šūfrā* on the other hand means 'beauty'. For other texts using *nyk*, see Ch.4.E.2.

660 *l q[n]lh*

By *q[n]lh*

To the right of the beginning of KJC 659. Rough hammering joins all the letters of the text except the final one. The *n* is obscured and most of the fork of the *h* is covered by hammering. The name is not in HIn. See Index a for other occurrences at these sites.

661 *l ʾs²ṣr*

By *ʾs²ṣr*

Above and to the right of KJB 660. The name is not in HIn. See Index a for other occurrences at these sites.

662 *l s¹m*

By *s¹m*

To the right of KJC 661.

662a *l gs¹°*

By *gs¹°*

The reading is doubtful. There is a line joining the *l* to the final letter of KJC 662 and another joining the *g* with the letter I have read as *s¹*. The name is not in HIn.

663 *l hhd -*

By *hhd -*

There is hammering after the *d* which might be a further letter. The name is not in HIn.

664 *l qym*

By *qym*

On the left side of the rock below and to the right of KJC 657.

665 *l qymt bn s¹ ʿd*

By *qymt* son of *s¹ ʿd*

The text is written below KJC 662. The *l* is joined to the *q* by two ligatures and part of the *m* is covered by an abrasion. KJB 115 is also by someone called *qymt bn s¹ ʿd*.

666 *l rms¹*

By *rms¹*

Below KJC 661. The *r* has been joined to the *l* and the tail of the *s¹* at the end runs into the *m*. The *m* is a rectangular shape without an indentation. The name occurs again in KJC 670 on this rock.

667 *l (t)m bn (ġ)m*

By *(t)m bn (ġ)m*

To the right of KJC 666. The text is extremely doubtful. The field copy has a *t* for the second letter but it is difficult to justify from the photograph. The penultimate letter is a line with a tail which might be a *ġ*. The second *m* is written slightly to the left.

668 *l brr bn ʾs¹mn(t)*

By *brr* son of *ʾs¹mn(t)*

Starting to the right of KJC 662a. The *t* is inscribed to the right of the *n* and is obscured by a chip. The names occur again in KJC 128 and 257.

669 *l -brn̊°*

By *-brn̊°*

On the right side of the rock. The second letter is a dash and the other letters doubtful.

670 *l rms¹*

By *rms¹*

Below and to the right of KJC 669. See KJC 666.

671 *l s¹dn*

By *s¹dn*

Part of the *s¹* is covered by an abrasion.

672 *l qnm bn qn*

By *qnm* son of *qn*

To the right of KJC 671.

673 *ʾ[n] ġr b kbr*

I am fond of *kbr*

On the lower right hand corner of the rock. There is an abrasion before the first *ġ*. I have restored a *n* on the basis of the expression *ʾn ġr b* occurring elsewhere, see Ch.4.E.3. The back of the *k* is shallower then the rest of the letter. KJC 673a begins directly after the end of this text and it is possible it is a continuation: *(w) mġny--* (And) *mġny--*.

673a *(w) mġny--*

(And) *mġny*--

Written after the end of KJC 673. The letters after *y* are hammered over. For texts of simple authorship introduced by *w*, see Ch.4.A.3. See KJC 673.

674 *w ġ̊nṯ*

And *ġ̊nṯ*

The first letter is a circle that has been completely filled in and the centre of the grid of the *ṯ* has been hammered over. See Ch.4.A.3 for names introduced by *w*.

675 *l s¹yr bn s¹lm bn ft*

By *s¹yr* son of *s¹lm* son of *ft*

To the right of KJC 674. The *s¹* of *s¹lm* has been filled in. The third name is written to the right of the rest of the text, it is possible that there are further letters under the abrasion and the name continues on the other side of the *ḫ* of KJC 676b, see KJC 713. The name *ft* is not in HIn. *s¹yr bn s¹lm* occurs elsewhere, see Index a. KJC 676a on this rock is also by someone called *s¹yr*.

676 *l hg˚*

By *hg˚*

The text is written squashed up to the right of the *s¹* of the first name of KJC 675. Part of the *l* and *h* are covered by an abrasion and the circles of the *g* have been completely filled in.

676a *w s¹(y)r ḫṯ[ṭ]*

And *s¹(y)r* is [the] inscriber

Below the drawing of a camel to which it refers. Half of the *w* has been filled in and the *y* and final *ṭ* are obscured by hammering. For the formula referring to drawings, see Ch.4.B.2. KJC 675 is also by someone called *s¹yr*.

676b *l fḫtn*

By *fḫtn*

The name is not in HIn. See Index a for other occurrences at these sites.

Cdr 316 A camel and rider drawn above KJC 670. A camel with its front legs hobbled above KJC 676a, the author of which says he is the inscriber.

CDXXIX South

677 *l lgm*

By *lgm*

678 *l gs¹t*

By *gs¹t*

The text is written above and to the right of KJC 677. The letters are carelessly hammered and badly formed. The top circle of the *g* has been almost completely filled in. The name is not in HIn.

Southeast

679 *l hnʾb* (or *r)*

By *hnʾ-*

The text is written horizontally. There is a carelessly hammered *b* or *r* after the *ʾ*. The text is probably unfinished.

680 *l ftyt bn ʾ-wr*

By *ftyt* son of *ʾ-wr*

The *bn* and patronymic are written below the first name. The second letter of the final name is covered by a chip although the arms of the letter are still legible.

CDXXX East

681 *l tġṯ*

By *tġṯ*

The text is written on the top left hand part of the rock.

682 *l ʿbd bn --*

By *ʿbd* son --

The first four letters are written in a circle and *bn* below. No further letters are legible.

683 *l ʿyl*

By *ʿyl*

The text is written below and to the right of KJC 682.

684 *l gs²m*

By *gs²m*

The inscription is written down from underneath the legs of a camel. Both the inscription and drawing are surrounded by a cartouche.

685 *l ʿbd bn s¹yr*

By *ʿbd* son of *s¹yr*

Above KJC 684. The text is written down and then curves to the right. For other texts by *ʿbd bn s¹yr*, see Index a.

686 *l ḥg bn mh[ṣ]*

By *ḥg* son of *mh[ṣ]*

On the left side of the rock. The rock is chipped after the *h* and I have restored a *ṣ* on the basis of the name occurring in KJA 128. *mhṣ* is not in HIn. See Index a for other occurrences at these sites.

687 *l knn bn ʿlṭ*

By *knn* son of *ʿlṭ*

The text is written to the right of KJC 686. *knn* is only previously attested in Qat. and Sab. *ʿlṭ* is not in HIn. For other occurrences of *knn bn ʿlṭ*, see Index a.

688 *l ʾn ʿm*

By *ʾn ʿm*

Above and to the right of KJC 687.

689 *l ws¹q*

By *ws¹q*

Below KJC 688.

690 *w ftyt ḫṭṭ (bn) s²ʿn*

And *ftyt* is [the] inscriber son if *s²ʿn*

Written down from the legs of a feline which is part of the drawing to which the inscription refers. The reading after *ḫṭṭ* is doubtful. The *b* and *n* are joined and look like a *ṭ*. The next letter has a slight hook although but it seems to be a different colour to the rest of the letters.

690a *l fṣyt*

By *fṣyt*

To the right of KJC 690. The *t* is partially covered by an abrasion.

Cdr 318 (a) A camel and rider drawn by *gs²m* the author of KJC 684.

(b) A feline with three claws depicted on its paws. It is being attacked by a man with a spear ? and carrying a sword at his waist. *ftyt* the author of KJC 690 was the artist.

691 *wtnʾdn*

???

The letters are written in a circle and it is uncertain how they should be interpreted.

Cdr 319 Of a whitish patina, a stick horse with a line for the rider ?

CDXXXII Southeast

692 *l ḫrs¹*

By *ḫrs¹*

CDXXXIII Almost horizontal, sloping slightly east

693 *l ḏʾb*

By *ḏʾb*

CDXXXIV Practically horizontal, sloping slightly southeast

694 *l bnʾb*

By *bnʾb*

The name is not in HIn. See Index a for other occurrences at these sites.

CDXXXV West

695 *l qrs²*

By *qrs²*

The *l* has a proportionally long hook. The name is not in HIn. It occurs in KJB 132 as well.

CDXXXVI Northeast

696 *l grf*

By *grf*

697 *lʿs¹nn*

By *s¹nn*

Below KJC 696. The *l* is indistinctly hammered.

698 *l (ʾ)ṣlḥ*

By *(ʾ)ṣlḥ*

One forks of the ʾ is covered by a chip and the other is inscribed at a right angle to the stroke.

699 *l bll bn ṣḥb*

By *bll* son of *ṣḥb*

The final *b* is more rounded than the other *b*'s of the text.

Rocks CDXXXVIII-CDXLIX are all loose boulders.

CDXXXVIII Small loose boulder, inscribed surface sloping west when found

700 *l ʾsʿmnt bn ḥrm bn mtr*

By *ʾsʿmnt* son of *ḥrm* son of *mtr*

Written in a loop inside a cartouche. For other occurrences of the name, see Index a and see Ch.5.C.2, genealogy 2.

701 *l lbʾt bn nʿm*

By *lbʾt* son of *nʿm*

The last name turns to the right.

702 *l ʿyl*

By *ʿyl*

Written directly on from the end of KJC 701.

CDXXXIX Small loose boulder, facing east when found

703 *l tmlh bn ʿbd*

By *tmlh* son of *ʿbd*

The *bn* and patronymic are written below the first name.

CDXXXIXa A loose boulder. The inscribed surface was facing west when found

703a *l ʿr-r-bm*

By ----

Most of the rock face has eroded away and only some of the letters are complete.

CDXXXIXb A loose boulder, the inscribed surface was facing west when found

703b *l ʿrn*

By *ʿrn*

CDXL A loose boulder, facing west when found

704 *l z*

By *z*

Both letters are extremely faint.

CDXLI A loose boulder, the inscription was on a horizontally facing surface when found

705 *l ʾn ʿm bn brd*

By *ʾn ʿm* son of *brd*

The *m* is partly damaged but otherwise clear. For other occurrences of *ʾn ʿm bn brd*, see Index a.

706 *l bn ʾb°*

By *bn ʾb°*

The final letter is shallow and indistinct. The name is not in HIn. See Index a for other occurrences at these sites.

CDXLII On a deeply embedded loose boulder. The inscribed face was sloping slightly northeast when found.

707 *-(ʿ)ṣb°*

-(ʿ)ṣb°

The rock is chipped before the first letter and probably a *l* should be restored. All the letters are faint and uncertain and only part of what might be an *ʿ* is visible at the beginning.

CDXLIII A loose boulder, the inscribed surface was facing northeast when found

708 *l ʾmn bn s¹ °- ʿ(l)mt°bn ʿlṭ°*

By *ʾmn* son of *s¹ °-* son of *ʿ(l)mt°* son of *ʿlṭ°*

The text is written in three lines one below the other. Several of the letters are doubtful. Part of the first *ʿ* is covered by a chip and there is no letter visible after it. The *bn* and third *ʿ* are extremely faint and written slightly below the other letters of the second line. The *l* of the third name is curved and the two rounded lines of the *m* are not joined. Part of the *t* is obscured by a chip. The bottom part of the last letter of the third name is very faint. The name *ʿlṭ* is not in HIn. See Index a for other occurrences at these sites.

CDXLIV A loose boulder, the inscribed surface was facing northeast when found

710 *(l) (ʾ)mt*

(By) *(ʾ)mt*

Most of the *l* and *ʾ* are covered by a chip. The reading of the text is very doubtful.

710a *hn̊n°*

hn̊n°

The letter *h* and possibly two *n*'s are legible below KJC 710. No initial *l* is visible.

CDXLV A loose boulder, the inscribed face was facing southwest when it was found.

711 *w°ḏ̲krt°lt zbʿw blṣ̊t°w ʿmr°w zd---(s¹)[ʿ]dʾl ḫṭṭ*

And may *lt* remember *zbʿ* and *blṣ̊t°* and *ʿmr°* and *zd---(s¹)[ʿ]dʾl* is [the] inscriber

The text begins at the edge of the rock and curls round to the right. The second and third names of the prayer are written in smaller letters inside the loop created by the beginning and final part of the text. The text then continues to the left of the first word in a large outer curve.

The text is badly damaged in parts. A section of the first *w*, half the *ḏ̲* and a part of the *t* is covered by hammering. The *ṣ* of the second name in the prayer is an odd shape as the line joining the fork and circle of the letter is not straight. There are traces of what might be a *r* after the *m* of the third name. No letters are visible after the first two of the fourth name and the author's name at the end. There is sufficient space for three letters where the rock is chipped. The *s¹* of the author's name has no distinct tail and the letter I have restored as an *ʿ* has been completely hammered over. Neither *blṣt* nor *zbʿ* are in HIn. For this type of prayer, see Ch.4.C.1.

CDXLVa A loose boulder, the inscribed surface was facing south when found

712 *l s¹l̊m*

By *s¹l̊m*

The spine of the second *l* is unclear.

713 *l mṣry bn̊ ft*

By *mṣry* son of *ft*

The *bn* and patronymic are written diagonally below the first name. Part of the *b* is faint and uncertain. The name *mṣry bn ftḥ*° occurs in KJA 139 where the *ḥ* is very faint and *sʾlyr bn sʾlm bn ft* in KJC 675 although the rock is chipped after the end of the latter text and the text possibly continues. There do not seem to be traces of a letter after the *t* in this text but the rock is worn and I think it is possible that *ft[ḥ]* should be restored here and in KJC 675. *sʾlm* in KJC 712 on this rock might be the father of *sʾlyr* in KJC 675 and the patronymic might be supposed to be read with both *mṣry* and *sʾlm*, cf. *bn tbr* on Rock CDXLVII. The name *ft*, if that is the correct reading, is not in HIn.

CDXLVI A loose boulder, the inscribed surface was facing southeast when it was found

714 *l bgỉ*°

By *bgỉ*°

One loop of the *g* is covered by a chip and part of the *t*.

Facing northeast when found

715 *l ʿbd*

By *ʿbd*

The *l* is on the edge of the rock.

CDXLVII A loose boulder, the inscribed face was facing north when found

716 *l ẓ ʿn (bn tbr)*

By *ẓ ʿn* (son of *tbr*)

The beginning of both this text and KJC 716a are written diagonally up towards *bn tbr* and it is difficult to tell from the technique of inscribing or any other factors to which the *bn* and patronymic belong. Possibly *ẓ ʿn* and *krh* of KJC 716a are brothers and have written their patronymic once to be read with both their names cf. my suggestions for KJC 712-713. The letter I have read as *t* is a rectangle with only short protruding lines forming the grid.

716a *l krh (bn tbr)*

By *krh* (son of *tbr*)

See KJC 716.

CDXLVIII A loose boulder, the inscribed face was sloping north when it was found

717 *----mṭ -- ʿ---- ----- ------*

There are four lines of text on the rock all of which have been hammered over and rendered illegible. Only three letters can be read with any certainty.

CDXLIX A loose boulder inscribed on four faces

Southwest face when found

718 *l khl bn s¹n(y)*

By *khl* son of *s¹n(y)*

The final letter is a *g* and the name reads *s¹ng*. It is emended to *y* on the basis of *khl bn s¹ny* in KJB 135, KJC 389 and KJC 722 which is also on this rock.

Northeast face when found

719 *l ṯbr*

By *ṯbr*

The *b* is slightly damaged.

720 *l yḏmtn*

By *yḏmtn*

The line of the back of the *m* is thinner than the other lines of the text. The name is not in HIn.

721 *l ẓ ʿ[n]*

By *ẓ ʿ[n]*

There is a chip after the *ʿ* and I have restored a *n*. *ẓ ʿn* occurs in KJC 716.

On southeast face when found

722 *l khl bn s¹ny*

By *khl* son of *sʿny*

The text is partly surrounded by a cartouche which is hammered as a continuous line in places and as dots in others. The cartouche is broken by a chip in the rock surface around the beginning of the text. It may have continued around the end of the text but the rock is very worn and there are no traces left. See KJC 718.

Facing the ground when found

723 *l ʾn ʿm*

By *ʾn ʿm*

724 *l sʿyr*

By *sʿyr*

The *r* is much smaller than the other letters of the text because of a lack of space on the face of the rock.

CDLI Sloping east

725 *l ṣhbt*

By *ṣhbt*

Part of the fork of the *h* is covered by a chip.

CDLII Sloping northeast

726 *l mbʿl*

By *mbʿl*

On the top left hand corner of the rock. The final *l* is written to the left of the letters of the text. The name occurs as well in KJC 728 on this rock. the name is not in HIn. See Index a for other occurrences at these sites.

727 *w db*

And *db*

The *w* and loop of the *d* are covered by an abrasion. For texts of simple authorship beginning with *w*, see Ch.4.A.3.

728 *l mb ʿl*

By *mb ʿl*

To the left of KJA 727. It occurs as well in KJC 726 on this rock. The name is not in HIn.

729 *h ltm ṯry l m ʿzy*

O *lt* [grant] sufficiency to *m ʿzy*

The text is written below and to the right of KJC 728. For the vocative, see Ch.3.C.8 and for other prayers of this type, see Ch.4.C.3. For another occurrence of the substantive *ṯry*, see KJC 555.

730 *[l] ʾlṭ*

By *ʾlṭ*

The initial *l* is doubtful as there is not much space between a crack in the rock and the beginning of the text. The name is not in HIn. See Index a for other occurrences at these sites.

731 *l mn ʿ*

By *mn ʿ*

Below and to the right of KJC 730. Only part of the initial *l* remains, the rest has chipped away. The *m* is slightly damaged.

732 *l mġny*

By *mġny*

Part of the *l* and *m* are covered by abrasions.

a East

733 *ʾṭrfqṣmty˚w gr bn ʿs²b*

????? and *gr bn ʿs²b*

To the right of the inscription are a series of interconnecting lines.

b East

734 *l grf*

By *grf*

The letters are faint but the reading is certain.

735 *l ʿbd bn s¹yr*

By *ʿbd* son of *s¹yr*

Written in large letters down from the end of KJC 734. For other occurrences of the name and patronym, see Index a.

c Southeast

736 *w gr -*

And *gr -*

The fourth letter has been hammered over it might complete the name or be the beginning of another word which was left unfinished. The name *gr* occurs in KJC 733 which is in the same general area. For names introduced by the particle *w*, see Ch.4.A.3.

d Horizontal, lying at ground level. See Pl.XVb for KJC 744-754.

737 *l ʾnʿm bn brd*

By *ʾnʿm* son of *brd*

Written in a circle on the left side of the rock near an ibex. For other occurrences of *ʾnʿm bn brd*, see Index a.

738 *l mty bn rfʾy*

By *mty* son of *rfʾy*

See Index a for other occurrences of *mty bn rfʾy*. There are two *l*'s written to the left of the text which are probably false starts at writing inscriptions.

738a *l ḥ*

By *ḥ*

An unfinished text.

738b *l ḥ*

By *ḥ*

An unfinished text.

738c *l b*

By *b*

An unfinished text.

739 *l grs²ʿ*

By *grs²ʿ*

The name is not in HIn but is previously attested, see the Index of names.

740 *l zdn bn ʾġnt*

By *zdn* son of *ʾġnt*

Neither of the names are in HIn. For other possible occurrences of *zdn bn ʾġnt*, see Index a.

741 *l bġ*

By *bġ*

To the left of the end of KJC 740. The name is not in HIn. It is possible that the text is unfinished and a *ḍ* should be restored at the end. *bġḍ* occurs in KJC 759 from this area of the site and elsewhere, see Index a.

742 *l s¹nm bn ḏky bn ʾḏkw*

By *s¹nm* son of *ḏky* son of *ʾḏkw*

ʾḏkw is not in HIn. It is possible that KJC 179 is by *s¹nm*'s brother, see Index a and Ch.5.C.2, genealogy 6.

743 *l s¹yr*

By *s¹yr*

Written to the right of the beginning of KJC 742.

744 *w lṯ h w ʿl*

And *lṯ* the ibex

For this formula referring to drawings, see Ch.4.B.3.

744a *l ʿ*

Above KJC 744 to the left of an older drawing of a man. The text is unfinished.

745 *l ġnṯ*

By *ġnṯ*

Inscribed near the top of the rock, to the right of KJC 744a. The name occurs again in KJC 748 on this rock.

746 *l gs²m*

By *gs²m*

Below KJC 745.

747 *l s¹yr*

By *s¹yr*

Starting immediately after the end of KJC 746.

748 *l ġnṯ*

By *ġnṯ*

On the top right side of the rock. See KJC 745.

749 *l s¹lm bn ẓ ʿnt w s¹lm bn ẓ ʿnt ḫṭṭ*

By *s¹lm* son of *ẓ ʿnt*; and *s¹lm* son of *ẓ ʿnt* is [the] inscriber

There is more than one possible interpretation of the text. Perhaps the two phrases should be read separately: a) *l s¹lm bn ẓ ʿnt* b) *w s¹lm bn ẓ ʿnt ḫṭṭ*. Equally the position of the word *ḫṭṭ*, makes it uncertain as to whether it should be read with the first phrase or the second. The first phrase is written down and curving slightly to the right. The words *w s¹lm bn ẓ ʿnt* are written in a complete loop just below, and the word *ḫṭṭ* inscribed outside the loop to the left of the *m* of *s¹lm* and below the *t* of the name *ẓ ʿnt* in the first part. It is possible that *ḫṭṭ* should be taken with first part and the text read as two:

a) *l s¹lm bn ẓ ʿnt ḫṭṭ* b) *w s¹lm bn ẓ ʿnt*. I have read it as one, similar in form to KJA 132 and TIJ 134, see Ch.4.B.2.

750 *l lḫṯ bn ʾs¹lm*

By *lhṯ* son of *ʾsʿlm*

lhṯ is not in HIn. For other occurrences of the name, see Index a.

751 *l br*

By *br*

The *l* and the *b* are facing down the rock and the *r* turns to the left.

751a *l b*

By *b*

To the left of KJC 751. The text is unfinished.

751b *l ṣ*

By *ṣ*

An incomplete inscription to the left of KJC 751a.

752 *l ʿrḏ(t)*

By *ʿrḏ(t)*

Written above an ibex, the penultimate and final letters are separated by the animal's neck. The third letter is a hammered circle and could be either an *ʿ*, *w* or *r*. I have read it as the latter, as there are no traces of a crossbar and the hammering which completes the letter seems to be shallower than the rest. The last letter has been hammered over.

753 *l mlʾ*

By *mlʾ*

The *m* has no indentation and the second *l* runs into the lower horn of the ibex. It is shallower than the lines of the drawing.

754 *l wb ḫṭṭ h wʿl*

By *wb* is the drawing of the ibex

On the right side of the rock. For this formula referring to drawings, see Ch.4.B.1. The name is not in HIn. It occurs in KJA 61 and KJA 339 as well.

Cdr 321 (a) On the left side of the rock is an ibex probably drawn by *ʾnʿm*, the author of KJC 737. There are clearly two stages of drawings on the central and right side of the rock.

(b) Three ibex deeply cut in strong even lines. One of them has two patches depicted in relief on its body. The left hand one is acknowledged by *lṯ*, the author of KJC 744 and the right hand one by *wb* the author of KJC 754. *sʾlm* in KJC is probably referring to the middle one.

(c) The older drawings are pecked and, in some places, the inscriptions (and drawings associated with them) are inscribed on top. There are four men, all with their arms in the air. The top left hand one has bent legs and is holding a short knife, there is an appendage hanging down between his legs. To the right is a man with a bow and arrow in one hand. Below is a smaller man with a fist depicted. There are lines, which are inscribed in a different technique and probably later, protruding from his waist to the man on his right and continuing from one of his legs. The man on the right has fingers crudely depicted. There is a hammered circle attached to a line with a fork, below and to the left, which is pecked in the same fashion as the man.

e Virtually horizontal, lying at ground level

755 *l mty bn rfʾy*
By *mty* son of *rfʾy*
For other occurrences of *mty bn rfʾy*, see Index a.

756 *w ḏʾb bn sʾm ʿn ḫṭṭ*
And *ḏʾb* is [the] inscriber
For other occurrences of *ḏʾb bn sʾm ʿn*, see Index a. *ḏʾb* is referring to Cdr 321. For this formula referring to drawings, see Ch.4.B.2.

Cdr 322 A drawing of an ibex and a man with one leg in the air and holding a bow and arrow in one hand and possibly a short knife in the other. *ḏʾb*, the author of KJC 756 says he is the inscriber.

f Northeast

757 *l ʿbdʾḥwr*
By *ʿbdʾḥwr*
= KPrJ 2

The letters of the text are rather carelessly hammered. *ʿbdʾḥwr* is not in HIn. For the element *ʾḥwr*, see Ch.5.A.1.b and Index a.

758 *l tnn bn hnʾ bn zdqm*

By *tnn* son of *hnʾ* son of *zdqm*

= KPrJ 3

KJC 761 on this rock is by someone called *tnn*. *zdqm* is not in HIn. See Index a for other occurrences at these sites and see Ch.5.C.2, genealogy 3.

759 *l bġḍ*

By *bġḍ*

= KPrJ 4

760 *l mlgn*

By *mlgn*

= KPrJ 5

There is a hammer mark after the *n*. The name is not in HIn. See Index a for other occurrences at these sites. The name is inscribed on the north northwest face of this rock as well, see KJC 762.

761 *w dʿ ḏs²ry tnn*

And may *ḏs²ry* call *tnn*

= KPrJ 6

For prayers of this type, see Ch.4.C.2. See KJC 758.

North northwest

762 *w dʿ ḏs²ry mlgn*

And may *ḏs²ry* call *mlgn*

See Ch.4.C.2 for this type of prayer, *mlgn* is not in HIn. See KJC 760.

763 *l ʿrs¹*

By *ʿrs¹*

A hammer mark covers most of the first letter.

764 *l ʿ*

By *ʿ*

The text is unfinished.

765 *l ʿrb bn ḫrm*

By *ʿrb* son of *ḫrm*

Cdr 323 To the right of KJC 762 is a dog chasing an ibex and below the same inscription an ibex.

g East

766 *l tmlh*

By *tmlh*

767 *l gḫf*

By *gḫf*

The name is not in HIn. See Index a for other occurrences at these sites.

768 *l ʿbd bn zdqm*

By *ʿbd* son of *zdqm*

zdqm is not in HIn. For other occurrences of *ʿbd bn zdqm*, see Index a.

h East

769 *l ṭyft*

By *ṭyft*

The text is written down from the belly of an ibex.

770 *l lhmt*

By *lhmt*

The name is not in HIn.

771 *l gs²[m]*

By *gs²[m]*

The last letter is almost completely covered by a chip. I have restored a *m* on the basis of the name *gs²m* occurring in KJC 445 etc.

Cdr 324 An ibex. Probably drawn by *tyft*, the author of KJC 769. There is a circle with a slightly curved tail to the right.

INDEX OF NAMES IN HISMAIC:

(An asterisk after the inscription number indicates that the reading is doubtful)

ʾb	*ab*, 'father', *ʾabba* 'prepare for, yearn for', *ʾabb* 'pasture': Cantineau 55 *ʾb*; PNNR 9; Stark, 63 *ʾbʾ*; HIn 7-8 Saf.; Hismaic KJA 206.
ʾbʾns¹	Cmpd. HIn 8 Saf. and cf. other compounds with *ʾns¹*, 79 *ʾmʾns¹* Tham.C HU 617, 435 *ʿmʾns¹* Sab. etc, 621 *hlʾns¹* Saf. (doubtful); Mixed WTI 97; Hismaic TIJ 12. -fa. of *ṣlf* TIJ 12
ʾbrq	*ʾfʿl*, see *brq*: *ʾabraq* 'a rope, animal having two colours, black and white'; ID 264-5 *ʾUbayriq*; cf. Cantineau 56 *ʾbrqh*; Stark 64 *ʾbrwq*; Hismaic AMJ 3. -s. of *ḥddn* -s. of *tmlh* AMJ 3
ʾbs¹lm	Cmpd., see *ʾb* and *s¹lm*; North 1928: 234 *ʾabᵉšālôm*; Cantineau 55 + 151 *ʾbšlm*; HIn 12 Lihyn; Hismaic MNM a 1. -s. of *brky* -s. of *ʿm* MNM a 1
ʾbs²	*ʾfʿl*, see *bs²*: Hismaic KWM 5*. -fa. of *ddʾl* KWM 5*
ʾbṣr	*ʾfʿl*, see *bṣr*: Cantineau 55-56 *ʾbṣrw*; PNNR 10.; Hismaic CTSS 2a
ʾbmlk	Cmpd., see *ʾb* and *mlk*; Noth 1928: 234 *ʾᵃbīmelek*; HIn 16 Sab; Hismaic Naveh TSB C.
ʾbn	*ʾabana* 'blame, suspect' or see *bnn*: PNNR 9; CIK 101,1 *Abān*; ID 48 *Abān* (the name of a mountain); cf. LittNE 2 232 *ʾbyn*; Stark 64 *ʾbnʾ*; HIn 16 Saf.; Hismaic KJC 288, 481.
ʾbnḥt	Cmpd., see *ʾb*: *naḥata* 'cut, hew', *naḥīt* 'a stranger' or cf. *bn* and see *ḥt*; HB 49 *ᵉNḥīt*; Hismaic TIJ 348. -s. of *ḫly* TIJ 348
ʾbns¹ʿd	Cmpd., cf. *bns¹ʿd* and see *s¹ʿd*; Hismaic JS 682.
ʾbnmn	Cmpd., cf. *bn* and see *mn*: WAM T 25.
ʾtr	See *tr* or *wtr*: Cantineau 69 *ʾtrw*; PNNR 16; Hismaic KJC 403.

ʾtm *ʾatm* ‘having two punctures so as to become one’ or see *tm* or *wtm*: Cantineau 68-9 *ʾtmw*; PNNR 16; HIn 19 Saf.; Hismaic JS 670, TIJ 183, TIJ 472.

-s. of *m ʿnlh* TIJ 183

ʾtmt See *ʾtm*: HIn 19 Tham.B JS 577; Hismaic WAM T 31, WAM T 38.

-fa. of *s¹ ʿdlh* WAM T 31

-s. of *ḥdd* -s. of *ḥḏm* WAM T 38

ʾṯ *ʾaṯīṯ*, *ʾaṯṯ*, ‘abundant’: Hismaic JS 717.

ʾgd *gadda*, ‘cut, be new, be fortunate’ or from *wgd*, *ʾijād* ‘creation, invention’: cf. CIK 251,2 *Jadd*, CIK 252,1 *Jadūd* etc.; HIn 22 Saf.; Hismaic KJC 405.

ʾglḥ *ʾf ʿl*, *jaliḥa* ‘be bald’, *ajlaḥ* ‘bald’: CIK 144,2 *al-Ajlaḥ;* Cantineau 56 *ʾglḥ*; PNNR 10; HIn 23 Saf.; Hismaic TIJ 321.

-fa. of *w ʿl* -fa. of *s²hr* TIJ 321

ʾgm *ʾajima* ‘dislike, anger’, *jamma* ‘be abundant’, *ʾajamm* ‘greater in quantity etc.’ or from *wajama*: WR 48 *al-ʾAjamm*; Cantineau 56 *ʾgm*; PNNR 10; HIn 23 Saf.; Hismaic TIJ 257.

-fa. of *mtḥt* TIJ 257

ʾgmʿ *ʾf ʿl*, *jamaʿa* ‘collect, gather’, *ʾajmaʿ* ‘whole’: cf. CIK 256,2 *Jāmiʿ*, 265,1 *Jumaiʿ*; HIn 23 Saf.; Hismaic TIJ 195, TIJ 212, TIJ 287b, TIJ 315, TIJ 343, TIJ 354.

-fa. of *ftḥt* TIJ 343

-fa. of *ʾmrt* TIJ 354

-s. of *khl* TIJ 195, TIJ 315

ʾgml *ʾf ʿl*, see *gml*: HIn 23 Saf.; Hismaic TIJ 287, WAM T 56.

-s. of *khl* TIJ 287

ʾgys² *ʾf ʿl*, *jāša* ‘it boiled’, *jayš* ‘a troop’: HIn 24 Saf.; Hismaic TIJ 64 + 63.

-s. of *drs¹* -s. of *ʾgys²* TIJ 64 + 63

-fa. of *drs¹* -fa. of *ʾgys²* TIJ 64 + 63

ʾḥrs¹ *ʾf ʿl*, see *ḥrs¹*: HIn 25 Saf; Cantineau 60 *ʾḥrs²w*; PNNR 11; MuNJ 2.

-s. of *ḥb* -s. of *ḥ[](r)gt* MuNJ 2

ḥls[1] *ʾfʿl*, *ḥalis*, ‘courageous’, *ḥils* ‘a saddle cloth’: cf. CIK 324,1 *Ḥilās*, *Ḥils*, CIK 331,1,2 *Ḥulais*; ID 73: Stark 88 *ḥlyšw*, *ḥlyšy*; Hismaic KJA 40, KJB 138, KJC 423, KJC 631.

ḥlk *ʾfʿl*, *ḥalaka*, ‘be intensely black’: HIn 198 listed under *ḥlk*; see Beeston 1978: 17; Hismaic KJB 138 (fem.).

ḥwr *ʾfʿl*, see *ḥwr*, *ʾaḥwar* ‘having intense white or black of the eye, the planet Jupiter’ cf. CIK 146,2 *al-Aḥwari*; HIn 28 Saf. and cf. HIn 605 *hʾḥwr* Saf.; Hismaic AMJ 151, AMJ 152, AMJ 153, TIJ 393, TIJ 394, TIJ 424.

-fa. of *zydt* AMJ 152

-s. of *mḥrt* AMJ 153

-s. of *hʿtl* TIJ 394

-s. of *yʿly* AMJ 151

ʾḫ *ʾaḫ*, ‘brother’: Cantineau 59 *ʾḫw*; PNNR 11; HIn 29 Saf.; Tham.B WHI 35; Tham.D HU 698; Hismaic KJA 20*, TIJ 127.

-fa. of *hnʾlh* TIJ 127

-s. of *bhʾ** KJA 20*

ʾḫʾb Cmpd., see *ʾḫ* and *ʾb*: Noth 1928: 235 *ʾaḥ*[e]*āb*; Ansary 1966: 113; Caskel 1954: 142; HIn 29 Lihyn; Hismaic AMJ 114, KJC 4, KJC 282, KJC 283.

-fa. of *fnd* KJC 4, KJC 283

-s. of *ʿnʾl* AMJ 11, KJC 282

ʾḫmr *ʾfʿl*, *ḫamara* ‘cover, conceal’: HIn 30 Sab.; Hismaic TIJ 133.

-fa. of *hnʾlh* TIJ 133

ʾḫy Dim., see *ʾḫ*: Cantineau 59 *ʾḫyw*; PNNR 11; Stark 66 *ʾḫyʾ*; HIn 31 Saf., Tham.C HU 23; Hismaic KJB 58, KJC 134.

-fa. of *s*[2]*ṣr* KJB 58

-s. of *gʿd* KJC 134*

ʾdbʾl *ʾadaba* ‘invite, discipline, punish’: Fowler 1988: 389 *ʾad*[e]*b*[e]*êl*; HIn 31 Saf., Tham.B JS 551; Hismaic TIJ 477.

-fa. of *s*[1]*ʿdʾl* TIJ 477

ʾdd *ʾadda*, ‘befell’, *ʾadd,* ‘strength’, *ʾidd*, ‘wonderful thing’ or from *wdd*; CIK 565,1 *ʾUdad*; WR 348; HIn 32 Saf., Tham.B, JS 282 (doubtful), JS 365; Hismaic KJA 182*, KJC 588.

-fa. of *ġṯ* KJA 182*

-fa. of *m ʿs¹* KJA 588

ʾdr See *dr* and *wadara* ‘repel’: Cantineau 57 *ʾdrw* ? ; PNNR 10; Hismaic KJA 195*.

ʾdrm *ʾfʿl*, *dārim*, ‘plump’, *ʾadram*, ‘plump, toothless’: Cantineau 57 *ʾdrm*, *ʾdrmw*; PNNR 10; Savignac AS no. 6; CIK 142,1 *al-ʾAdram*, Hismaic KJA 349, KJC 253, KJC 271.

-fa. of *ḥr* KJA 349, KJC 253

-s. of *ʾs¹lh* -fa. of *ḥr* KJC 271

ʾds¹ *ʾfʿl*, *dassa* ‘hide, conceal’: TIJ 18b.

ʾdʿn *ʾfʿl*, *daʿin* ‘ill-natured’: Hismaic AMJ 141, AMJ 157.

-fa. of *whblh* AMJ 157

-fa. of *whblh* -fa. of *ʾdʿn* AMJ 141

-s. of *whblh* -s. of *ʾdʿn* AMJ 141

ʾdm *ādam*, ‘brown, tawny’: CIK 136,2 *Âdam*, CIK 565,2 *al-Udūm*; ID 44; Cantineau 56 *ʾdwmw*; PNNR 10; BDrN 6 *Âdam*; HIn 32 Saf.; Hismaic KJC 223.

-fa. of *ʾmt* KJC 223*.

ʾḏkw *ʾfʿl*, see *ḏky*: Hismaic KJC 179, KJC 742.

-fa. of *ḏky* -fa. of *s²mrḫ* KJC 179

-fa. of *s¹nm* KJC 742

ʾḏnt *ʾaḏina* ‘listen, permit’, *ʾuḏun*, ‘ear’, dim. *ʾuḏaynah*: CIK 565,2 *ʾUḏaina*; ID 106; WR 349; Cantineau 56 *ʾdynt*; PNNR 10; Stark 65 *ʾdynt*; HIn 34 Saf., Tham.C JS 749; Hismaic JS 595, KJA 5, KU 2.

-s. of *(w)--kyt* -fa. of *nsʾ* JS 595

ʾḏnl Cmpd., see *ʾaḏina* under *ʾḏnt*, *ʾiḏn* ‘permission, will’: Hismaic Naveh TSB C*.

ʾr *ʾayr* ‘penis’: HIn 35 Saf., Tham.B HU 697, HU 706; Hismaic TIJ 280.

-fa. of *ts¹b* TIJ 280

ʾrb *ʾaraba* ‘be cunning’, *ʾarīb* ‘cunning’ or see *rb*: HIn 35 Saf., Hismaic TIJ 443.

-s. of *ʾftḥ* TIJ 443

ʾrs² *ʾaraša* ‘lacerate’, *ʾarš* ‘hommes, genre humains’ (see RNP I 47), Heb. *ʾᵉrešet* ‘desire, request’: CIK 358, 1 *Irāš*; Benz 1972: 276 *ʾrš*; Cantineau 67 *ʾršw*; PNNR 15; HIn 37 Lihyn Saf., Tay. JA 528, Tham.B HU 704; Hismaic AMJ 47, AMJ 80, AMJ 107, AMJ 110, KJC 206, KJC 247, KJC 269, KJC 380, KJC 396, KJC 573, KWM 1, LAU 13.

-fa.of *ṣṣrt* AMJ 110

-s. of *ʾftḥ* KJC 269, KJC 380, KJC 573

-s. of *flṭ* AMJ 107

-s. of *fṭ* KJC 396

ʾrs²t See *ʾrs²*, *ʾarraša* ‘provoke’: CIK 358,1 *ʾIrāša*; ID 202; HIn 37 Saf.; Hismaic KJA 170*.

-s. of *ʿln* KJA 170*.

ʾrs²lh Cmpd., see *ʾrs²*; Hismaic AMJ 120, KJA 108, KJA 255, KJB 69*, KJB 114, KJB 125, KJC 512.

-fa. of *nhq* -fa. of *ʾrs²lh* AMJ 120

-s. of *ʿhn* KJA 108

-s. of *nhq* -s. of *ʾrs²lh* AMJ 120

ʾr ʿt *wari ʿ* ‘be pious’, *wara ʿ* ‘be faint hearted’, *ʾawra ʿa* ‘intervene’, *wari ʿ* ‘godly, timid’: HIn 37 Tham.B JS 321 = HU 650; Hismaic KJC 570.

ʾzd CIK 217, 1-2 *al-Azd*; Hismaic CTSS 2b*.

ʾzm *ʾazama* ‘bite’, *ʾazūm* ‘canine tooth’, *zamma* ‘tie, bound’, Cantineau 59 *ʾzmw*; PNNR 11; HIn 40; Hismaic TIJ 88.

ʾznm *taznīm* ‘the cutting of a part of the ear of an animal leaving it to hang down’, *ʾaznam* ‘hard or rigorous time’: CIK 218,1 *Aznam*; ID 108; HIn 40; Hismaic TIJ 79.

ʾs¹ *ʾās* ‘myrtle’, *ʾaws* ‘gift’: CIK 213,2-215,2 *Aus*; ID 83; Cantineau 57-58 *ʾwšw*; PNNR 11; Stark 66 *ʾwšy*; HIn 40-41 Lihyn, Saf.; Hismaic JS 229,

KJB 141, KJC 36, KJC 82, KJC 270, NST 1, TIJ 328, TIJ 427, TIJ 428, TIJ 445, TIJ 449a, TIJ 459, TIJ 492, TIJ 505.

-fa. of *ʾs¹lm* KJC 36

-fa. of *ʾhwd* TIJ 328

-fa. of *bnzʿg* TIJ 449a

-fa. of *s²l* TIJ 445, 459

-fa. of *mlkt* -fa. of *bs²mn* TIJ 505

-s. of *bnngʾt* KJC 82

-s. of *s¹ʿd* -s. of *ḥdd* TIJ 492

-s. of *s¹ʿdlh* JS 229

-s. of *ḏ-* KJB 141

-s. of *ʿhn* -s. of *tm* KJC 270

-s. of *wḥf* TIJ 139

ʾs¹ʾl Cmpd., see *ʾs¹*; HIn 41 Saf.; Tham. ? Ph 165v 1; Hismaic JaS 1.

-fa. of *nbh* JaS 1

ʾs¹d *ʾasad*, 'lion': CIK 194,1 *Asad*, CIK 196,1-197,1 *Asīd*, CIK 575,2 *Usaid*; BDrN 6 *ʾAsad*; Cantineau 68 *ʾšdw*; PNNR 15; Stark 73 *ʾšd*; HIn 42 Lihyn, Saf.; Hismaic CSP 2, CSP 3i, CTSS 1a, JS 629, JS 632, JS 702, JS 735, KJC 216, KJC 232*, KWM 9, Naveh TSB C, TIJ 129, TIJ 223.

-fa. of *ẓʿn* JS 702

-fa. of *mʿz* JS 629

-fa. of *bʿ* JS 632

-s. of *tm* -s. of *ʿbd* KWM 9

-s. of *s¹ʿdt* TIJ 129

-s. of *wʾl* TIJ 223

ʾs¹dt See *ʾs¹d*, *ʾasadah* 'lioness': HIn 42 Saf.; Hismaic NST 1.

ʾs¹rk *sarika* 'pine away': HIn 44 Saf.; Hismaic AMJ 37, KWM 7.

-fa. of *s²l* KWM 7

-s. of *zdʾl* AMJ 37

ʾs¹lb *salaba* 'seize, plunder', *ʾuslūb* 'road, way': HIn 45 Saf.; Hismaic TIJ 406*.

-s. of *yn ʿ* -s. of *fṣy* TIJ 406*

ʾs¹ll *ʾf ʿl*, *salla* ‘draw something out of another thing’, *sall* ‘a man whose teeth are falling out’, *salīl* ‘a drawn sword, male offspring’ *ʾislāl* ‘a bribe’: Cantineau 68 *ʾšl*; PNNR 15; Hismaic CTSS 2a.

ʾs¹lm *ʾf ʿl*, see *s¹lm*: CIK 197,1,2 *Aslam*, CIK 197,2 *Aslum*, CIK 198,1 *al-Aslūm*, CIK 575,2 *ʾUsailim*; ID 22 etc.; Cantineau 151 *ʾšlmw*, *ʾšlm*; PNNR 15; HIn 45 Lihyn, Saf., Tham.C JS 173, Tham.D HU 698; Hismaic AMJ 79, AMJ 117, KJA 17, KJA 37, KJA 112, KJA 237, KJA 327, KJB 30, KJB 47, KJB 57, KJB 158, KJC 36, KJC 151, KJC 321, KJC 442a, KJC 522, KJC 750, MNM c 7, TIJ 111*.

-fa. of *bhʾ* KJA 17, KJB 57, KJC 151

-fa. of *ḥrs¹* KJA 112, KJC 442a

-fa. of *km* KJA 237

-fa. of *lṯ* AMJ 79, AMJ 117, KJA 37

-fa. of *lhṯ* KJB 30, KJC 321, KJC 750

-fa. of *mdʿ* TIJ 111*

-s. of *ʾs¹* KJC 36

-s. of *ʿbdmk* -s. of *khl* MNM c 7

-s. of *ms¹lm* -fa. of *bhʾ* KJB 47

-fa. of *ḥrs¹* KJC 522

-fa. of *ṣḥb* KJB 158

ʾs¹lmt See *s¹lm*: HIn 45; Hismaic Meek.

ʾs¹lmn See *s¹lm*: HIn 45; Hismaic WAM T 43*.

-fa. of *ʿmhzn* WAM T 43*

ʾs¹lh Cmpd., see *ʾs¹*: CIK 215,2-216,1 *Ausallāh*; Cantineau 58 *ʾwšʾlh*, *ʾwšʾlhy*, *ʾwšlhy*, *ʾwšlh*; PNNR 10, PNNR 11; HIn 45 Saf.; Hismaic AMJ 103, JS 179, JS 618, KJA 30, KJB 166, KJC 271, KJC 440, TIJ 5, TIJ 20, TIJ 36, TIJ 61, TIJ 85, TIJ 441, TIJ 487, TIJ 504.

-fa. of *ġṯ* TIJ 5

-fa. of *ġṯlh* TIJ 441

-fa. of *ngm* AMJ 103

-s. of *tm* -fa. of *ʾdrm*, KJC 271

-s. of *ḥrkn* -s. of *ḥrs²t* TIJ 504

-s. of *ḫrgt* -fa. of *mḥwr* KJA 30

-s. of *ʿrs¹* KJC 440

-s. of *khln* -fa. of *ḥmlg* TIJ 36

-s. of *kyln* TIJ 61

-s. of *whblh* TIJ 85, TIJ 487

ʾs¹mn *ʾfʿl*, see *s¹mn*: HIn 46; Hismaic WAM T 28.

-s. of *ḏl* WAM T 28

ʾs¹mnt Cmpd., see *ʾs¹* or see *s¹mn*: CIK 216,1 *ʾAusmanāt*; HIn 46 Lihyn, Saf., Tham.C ? HU 472; Hismaic KJA 29b, KJA 84, KJA 167, KJA 186, KJA 225, KJC 21, KJC 55, KJC 89, KJC 101, KJC 128, KJC 155a, KJC 176, KJC 221, KJC 257, KJC 263, KJC 370, KJC 580, KJC 668*, KJC 700, TIJ 83, TIJ 131.

-fa. of *brr* KJC 128, KJC 257, KJC 668

-s. of *ḥrm* KJA 29b, KJA 186, KJA 225, KJC 21, KJC 55, KJC 89, KJC 221, KJC 263

-s. of *mtr* KJA 84, KJC 176, KJC 370, KJC 700, TIJ 83

ʾs¹wr *ʾfʿl*, *s¹wr*, *sāra* ‘leap, spring’: HIn 47 Saf.; Hismaic AMJ 31, AMJ 119, LAU 28, TIJ 31a, TIJ 115, TIJ 209, TIJ 235, TIJ 247.

-s. of *s¹r* AMJ 119

-s. of *whbʾl* TIJ 235

ʾs¹y *ʾasiya* ‘grieve’, *ʾusan* ‘patience’: HIn 47 Saf.; Hismaic KJC 29.

-fa. of *mhṣ* -fa. of *ʿrhz* KJC 29

ʾs²rs¹ *ʾfʿl*, *šarisa* ‘be ill-natured, show love to men’, *šaris*, *ʾašras* ‘ill-natured’, *al-ʾašras* ‘the lion’: CIK 201,1 *ʾAšras*; ID 140: HIn 48 Sab.; Hismaic AMJ 78, KJA 226.

ʾs²s² *ʾašaš* ‘respond with energy’: Hismaic KJA 334, KJB 6, KJB 8, KJB 64, KJB 97*, KJC 160, KJC 166, KJC 190, KJC 334.

-s. of *ʿlṭ* KJB 64, KJC 190

-s. of *(ʾ)mn* KJB 6

ʾs²ṣr See *s²ṣr*, pl. *šaṣr*, *ʾašṣār* ‘young gazelles’: Hismaic KJA 16, KJA 53, KJA 207, KJB 151, KJB 155, KJC 248, KJC 278*, KJC 287, KJC 565, KJC 661.

-s. of *zdqm* KJA 53, KJB 155, KJC 287

ʾs²ml *ʾfʿl*, *šamila* ‘encompass’, *šamil* ‘agile, swift (camel)’: HIn 49; Hismaic TIJ 367, TIJ 400, TIJ 444.

ʾs²hl *ʾfʿl*, see *s²hl*, *ʾašhal* ‘having a mixture of blueness in the black of the eye’: CIK 201,1 *al-Ašhal*; HIn 49 Saf.; Hismaic KnEG 4.

-fa. of *ms¹lm* KnEG 4

ʾṣḥ *ṣaḥḥa* ‘be healthy, sound’, *ṣaḥīḥ* ‘healthy, sound’; HIn 51 Saf.; Hismaic NST 1.

ʾṣfr *ʾfʿl*, *ṣafara* ‘whistle (a bird)’, *ṣafar* ‘whistler’ or *ʾaṣfar* ‘yellow’: cf. Stark 109 *ṣprʾ*; Hismaic KJC 641.

-fa. of *ʿly* KJC 641

ʾṣlḥ *ʾfʿl*, *ṣalaḥa* ‘be good, honest’, *ṣāliḥ* ‘good, honest’: Hin 52 Saf.; Cantineau 67 *ʾṣlḥ*; PNNR 14 *ʾṣlḥ*; Hismaic KJA 152, KJC 73*, KJC 391, KJC 452, KJC 515, KJC 596, KJC 698, MNM a 1.

-s. of *tm̊lh* -fa. of *ʿm* MNM a 1

-s. of *ngʾ* KJA 152

-s. of *qnt* KJC 391, 452

ʾṯḏ Hismaic AMJ 105, KJC 114, KJC 174.

-fa. of *mtr* KJC 114

-fa. of *mr* AMJ 105

-s. of *klf* -fa. of *mtr* KJC 174

ʾʿ Hismaic KJC 22, TIJ 422 (both unfinished ?).

ʾʿtl *ʿatala* ‘drag along’: HIn 55 Saf.; Hismaic TIJ 196*.

ʾʿbd See *ʿbd*, pl. *ʿabd*, *ʾaʿbud*, *ʾaʿbād* ‘servants’: CIK 101,1 *ʾAʿbad*, 136,1 *al-Aʿbūd*; HIn 54 Saf.; Hismaic JS 709, KJA 194, KJB 110, KJC 169, KJC 188, KJC 274.

-fa. of *zdqm* KJC 188

-fa. of *ʿm* KJC 274

-s. of *ʿbdt* -fa. *m* KJA 194

-s. of *ʿkl* -fa. *zdqm* KJB 110, KJC 169

ʾʿbdt See *ʿbd*, pl. *ʿabd*, *ʾaʿbidah* 'servants': KJA 179*, KJB 17, KJB 90, KJC 35, 182, KJC 241, KJC 277, KJC 503, KJC 594.

-s. of *s¹yr* KJB 17, KJB 90

ʾʿtl *ʿatala* 'drag along': HIn 55 Saf.; Hismaic TIJ 196*.

-fa. of *ʿts¹* -fa. of *qn* TIJ 196*

ʾʿs¹ *ʿassa* 'patrol', *ʿassās* 'patrolling by night', *wʿs¹*, *ʾawʿas* 'sandy ground' or see *ʿs¹y*: cf. ID 198 *ʿAssas*; cf. HIn 419 *ʿs¹* Saf. (doubtful); Hismaic KJC 31a*.

ʾʿṣ *ʿṣw*, *ʿaṣā* 'beat', *ʿṣy*, *ʿaṣā* 'rebel', *ʿaṣṣa* 'devinir dur': cf. BDrN 15 *ʿÂṣī*; HB 40 *el-ʿÂṣī*; Hismaic Naveh TSB C; PNNR 14 *ʾʿṣṣ*.

ʾʿfr *ʾfʿl*, see *ʿfrw*, *ʾaʿfar*, 'whitish dust colour': HIn 56, Saf. add CSNS 707; Hismaic KJC 147i.

-s. of *ṣʿb* -fa. of *ms¹k* KJC 147i

ʾʿm *ʾfʿl*, see *ʿm*: HIn 56 Saf.; Hismaic JS 592.

ʾġnt See *ġn*, *ʾaġann* 'one who speaks through the nose': Hismaic KJA 83, KJA 270, KJC 75*, KJC 331*, KJC 740.

-fa. of *zdn* KJC 331*, KJC 740

-fa. of *nht* -fa. of *ġrṭm* KJA 270, KJC 75*

-s. of *mqẓ* -fa. of *nht* -fa. of *ġrṭm* KJA 83

ʾftḥ *ʾfʿl*, see *ftḥ*, *ʾaftaḥ* 'qui a les articulations des mains et des pieds lâches, sans vigueur': Cantineau 67 *ʾftḥ*; PNNR 14; HIn 58; Hismaic KJB 73, KJC 269, KJC 380, KJC 573, TIJ 123, TIJ 322, TIJ 324, TIJ 443.

-fa. of *ʾrb* TIJ 443

-fa. of *ʾrs²* KJC 269, KJC 380, KJC 573

-fa. of *ḫbrt* -fa. of *ʾftḥ* TIJ 324

-fa. of *s²ll* KJB 73

-fa. of *wrs²t* TIJ 322

-s. of *ḫbrt* -s. of *ʾftḥ* TIJ 324

ʾfṣ See *fṣ*: HIn 58 Lihyn (doubtful), Saf. add JaS 57; Cantineau 67 *ʾfṣ ʾ*; Hismaic TIJ 221, TIJ 426.

-s. of *ḥg* TIJ 221, TIJ 426

ʾfṣy *ʾf ʿl*, see *fṣy*: CIK 143,2-144,1 *Afṣā*; ID 196; HIn 59 Saf.; Hismaic AMJ 44, AMJ 147 (Personal.N and Tr.N), AMJ 148, WAM T 6; PNNR 41 *ʾfṣy* see LittNE.

-fa. of *ġnṯ* -fa. of *bnt* AMJ 147

-fa. of *mr ʾgd* -fa. of *mn ʿt* AMJ 44

-fa. of *y(ġ)ṯ* WAM T 6

ʾfl *ʾafala* 'be absent or hidden', *ʾafīl*, 'a young camel': Stark 72 *ʾply*; HIn 59 Saf. add WTI 101; Hismaic KJC 42, KJC 147f, KJC 191, KJC 205, KJC 451, KJC 550b, KJC 646.

-s. of *ʿbdlg* KJC 205*

ʾqm See *qm* or from *wqm*, *ʾawqama* 'treat violently': cf. Stark 72 *ʾqmʾ* (explained as Greek name Ἀκμή) Hismaic AMJ 38; PNNR 14 *ʾqwm*.

ʾkbr *kabura* 'grow large', *kabīr* 'big': Cantineau 61 *ʾkbrw,* Cantineau 105 *ʾkbry*; PNNR 12; HIn 61 Saf.; Hismaic AMJ 20.

ʾkr *ʾakara* 'till, dig a hollow in the ground', *ʾakkār* 'tiller' or from *krr*, see *krrt*; Cantineau 61 *ʾkwr*; PNNR 12; HIn 61 Saf.; Tham ? JS 303; Hismaic WAM T 44*.

-fa. of *ns²s²* WAM T 44*

ʾks¹r *kasara* 'break off', *kasīr* 'broken'; Hismaic TIJ 389*.

ʾklbn See *klb*. cf. CIK 150,2 *Aklab*, CIK 151, *Aklūb*; ID 13; cf. Cantineau 107 *ʾklbw*; PNNR 12; cf. Stark 67 *ʾklb*; cf. HIn 62 Saf.; Hismaic KJA 8*, KWM 13*.

-s. of *bḥs²s²* KWM 13*

ʾl ʿn Cmpd., see *ʿn ʾl* or *la ʿana* 'curse': Hismaic AMJ 137*.

ʾlf *ʾalifa* 'keep to, become familiar', *ʾallafa* 'unite', *ʾilf* 'companion': cf. Stark 68 *ʾlpy*; HIn 69 Saf., Tay.JS 433 (doubtful); Hismaic LAU 9, LAU 11.

ʾlfʾl Cmpd., see *ʾlf*: HIn 69; Hismaic TIJ 282, TIJ 291, TIJ 421.

-fa. of *ṣ---* -fa. of *ns²l* TIJ 421

ʾlwd Cmpd., see *wd* or from *lwḏ*, see *ʾlwḏ*: Hismaic TIJ 65.

-fa. of *ʿwḏ* TIJ 65

ʾlwḏ *ʾfʿl*, *lwḏ*, *lāḏa* 'take refuge in': CIK 155,2 *ʾAlwaḏ*; ID 245; HIn 72 Saf.; Hismaic KJC 281.

-fa. of *s¹rqt* KJC 281

ʾm *ʾamma* 'lead', *ʾumm* 'mother': Cantineau 64 *ʾmw*; PNNR 12; Stark 68 *ʾmʾ*, *ʾmw*; HIn 73 Saf., Tham.B HU 721; Hismaic KJA 157.

ʾmt *ʾamata* 'measure, compute', see *ʾamma* under *ʾm*, *ʾimmah* 'prosperity, blessing', *ʾmw*, *ʾamah* 'female servant': CIK 155,2 *Ama*; ID 260; Cantineau 64-65 *ʾmh*, *ʾmt* (all fem.); PNNR 12, PNNR 13; Stark 70 *ʾmtʾ*; HIn 73 Saf., Tham.B HU 807, HU 743, Tham.C ? JS 214, Mixed WTI 31; Hismaic JS 703, KJC 223, KJC 498, KJC 709*, TIJ 93, TIJ 95.

-fa. of *kmʾ* TIJ 93

-fa. of *s²mt* TIJ 95

-s. of *ʾdm°*KJC 223

ʾmr *ʾamara* 'command, order': Cantineau 64 *ʾmrw*; CIK 156,1 *ʾAmīr*, *ʾAmir*, *Âmar*; cf. ID 323 *al-Âmirī*; BDrN 6 *ʾÂmir*; Cantineau 64 *ʾmrw*, *ʾmyrw*; PNNR 13; HIn 75 Saf., Tham.B HU 667, Hismaic JS 622, KJA 244*, TIJ 242, TIJ 403, WAM T 3.

-fa. of *ḫzn* WAM T 3

-fa. of *ʿṣm* TIJ 242

-s. of *(t)r* JS 622

ʾmrʾl Cmpd., see *ʾmr*: HIn 75 Saf.; Hismaic TIJ 51, TIJ 49 + TIJ 52, TIJ 54, TIJ 55, TIJ 102, TIJ 107; PNNR 13 *ʾmrʾl*.

-fa. of *tm* TIJ 54, TIJ 102, TIJ 107

-fa. of *ʿmrʾl* TIJ 49 + TIJ 52

-s. of *tm* TIJ 51, TIJ 55

ʾmrt See *ʾmr*. *ʾamrah* 'an order', *ʾamarah* 'stones, heap of stones': HIn 75 Saf.; Hismaic KJC 438, KJC 439, TIJ 296, TIJ 354.

-s. of *ʾgmʿ* TIJ 354

-s. of *s¹lm* -fa. of *ʿwr* KJC 438

ʾmrh *maraha* ‘be weak (the eye)’, *ʾamrah* ‘weak-sighted’ or see *ʾmrt*: HIn 76 Saf.; Hismaic KJA 133.

ʾmlg *ʾfʿl*, *malaja* ‘suck (a kid)’, *malīj* ‘foster brother, illustrious man’, *ʾamlaj* ‘yellowish brown, barren desert’, *ʾumlūj* ‘wild date’: cf. HIn 42 *ʾs¹d ʾmlg* Lihyn JS 365; Hismaic KnEG 1*.

-fa. of *rbbʾl* KnEG 1*

ʾmn *ʾamina* ‘be safe, trust’, *ʾamīn* ‘trusted’: CIK 149,1 *Aiman*, 155,2 *Amān*, 156,1 *Amīn*, *Âmin*; BdrN 6 *Amīn*; Cantineau 64 *ʾmnyw*; PNNR 13; Stark 69 *ʾmyn*, *ʾmwn*; HIn 77 Saf.: Hismaic AMJ 53, KJA 10, KJA 62, KJA 198, KJB 6*, KJB 7, KJB 40, KJB 62, KJB 95, KJC 126, KJC 142, KJC 361*, KJC 407, KJC 485, KJC 492, KJC 564, KJC 708, TIJ 506.

-fa. of *ʿlṭ* KJA 10, KJB 6*, KJB 62

-s. of *s¹dn* KJA 198

-s. of *nhy* KJC 126

-s. of *s¹°* -s. of *ʿ(l)m(t)* -s. of *ʿlṭ°* KJC 708

-s. of *s¹mdt* AMJ 53

-s. of *ftḥt* -fa. of *ʿlṭ* KJB 95

-s. of *ṭyq* -fa. of *ʿlṭ* KJB 7

ʾmh See *ʾm* and *ʾmt*, *ʾamiha* ‘forget’: HIn 77 Saf.; KJC 659.

ʾns² See *ns²s²*: cf. Stark 71 *ʾnš* (reading uncertain); Hismaic KJB 130.

-fa. of *km* KJB 130

ʾnḍrt *naḍura* ‘be beautiful, bright’, *naḍr*, *ʾanḍar* ‘pure gold or silver’: Hismaic KWM 1.

ʾnʿm *ʾfʿl*, *niʿmah* ‘benefit, blessing’, *nāʿim* ‘pleasant (life), soft, tender (plant)’: CIK 188,1 *Anʿam*; ID 85, ID 299; WR 81; Cantineau 121 *ʾnʿm*; PNNR 13; Stark 70 *ʾnʿm*; HIn 80 Lihyn, Saf.; Hismaic AMJ 68, KJA 171, KJA 189, KJA 190, KJA 278, KJA 305, KJA 309, KJA 315, KJA 332, KJB 78, KJB 81, KJB 84, KJB 87, KJB 144, KJC 20, KJC 53, KJC 78, KJC 114, KJC 158, KJC 174, KJC 371, KJC 372, KJC 387, KJC 448, KJC 638, KJC 642*, KJC 645, KJC 688, KJC 705, KJC 723, KJC 737, TIJ 481.

-s. of *brd* KJA 190, KJB 78, KJB 84, KJB 87, KJB 144, KJC 20, KJC 372, KJC 448, KJC 645, KJC 705, KJC 737

-s. of *mtr* KJA 332, KJC 638

-s. of *ʾṯḫd* KJC 114

-s. of *br* AMJ 68

-s. of *m--* KJA 278

-s. of *mlk* KJA 189, KJA 305, KJA 309

-s. of *m[l]kʾl* -s. of *mʾ-* TIJ 481

ʾnf *ʾanf* 'nose', dim. *ʾunayf*: CIK 189,2 *Anf* CIK 572,1 *Unāf*, CIK 572,1-2 *Unaif*; ID 121; HIn 80 Saf.; Hismaic KJA 58, KJA 145, KJB 117.

ʾnmyt *nmy*, *namā* 'increase': Hismaic KWM 16.

-s. of *khln* KWM 16

ʾhd See *hd*: HIn 82 Saf.; Hismaic TIJ 96*.

-s. of *ṯnn* TIJ 96*

ʾhwd See *hwd*: CIK 145,1 *Ahwad*; ID 321; Stark 65 *ʾhwd*; HIn 83 Saf.; Hismaic TIJ 328.

-s. of *ʾs¹* TIJ 328

ʾwf *ʾwf*, *āfa* 'cause damage', *wfy*, *wafā* 'fulfil a promise': cf. CIK 213,1-2 *Aufā*; cf. ID 116; HIn 86 Saf.; Hismaic AMJ 16*.

ʾyt *āyah* 'sign, mark'; Cantineau 61 *ʾyty*; PNNR 12; HIn 87; Hismaic TIJ 440*.

-s. of *ḫbbt* TIJ 440*

ʾys¹ *ʾayisa* 'despair', see *ʾs¹*, *āsa* 'reward', *ʾiyās* 'reward': CIK 360, 2-361 *Iyās*; ID 229; Cantineau 61 *ʾyšw*; PNNR 12; Stark 67 *ʾyšʾ*; HIn 88 Lihyn, Saf.; Hismaic CTSS 1a, KJC 41*, JS 708, JS 746*, TIJ 227*, TIJ 434.

-fa. of *tmlḥwr* -fa. of *s¹ʿd* TIJ 434

-s. of *ʾs²-* JS 708

-s. of *wqs²* JS 746*

bʾr *biʾr* 'well', *baʾʾār* 'a well-digger': HIn 90 Saf.; Tham.B Ph 279 bh (doubtful); Hismaic LAU 14, TIJ 172.

bt *batta* ‘cut off, sever, decide against’: HIn 91 Saf.; Hismaic TIJ 122, TIJ 370, TIJ 380, TIJ 404.

bṯ Form VIII ?, *baṯṯa* ‘spread, scatter’: Hismaic TIJ 188*.

btr *batara* ‘cut, cut off’, *bātir* ‘cutting, sharp’ (sword): CIK 225, 2 *Bātir*; HIn 92 Saf. (not TIJ 147); Hismaic TIJ 99*(fem.).

-d. of *ʿṭ* TIJ 99*

btlt *batala* ‘sever, cut off’, *batīl* ‘slender’: cf. HB 11 *Bātil*, *Battāl* etc.; Hismaic AMJ 89.

bthdt Fem. cmpd. *bt* (cf. Ar *bint*) + *hdt* ?, see *hd*, *hāddah* ‘thunder’: Hismaic AMJ 92.

bgt *bajja* ‘lance a wound’, *bajjah* ‘a pimple on the eye’: ID 122 *Bajjah*; HIn 93 Saf.; Hismaic KJA 130*, KJA 193, KJC 43*, KJC 81, KJC 147e, KJC 224, KJC 508, KJC 714*.

-fa. of *m--* KJC 81

-s. of *tmʾl* KJC 224

-s. of *nht* KJC 508

bgr *bajara* ‘be large-bellied’, *bajīr* ‘abundant’: CIK 228,2 *Bujair*; Cantineau 70 *bgrt*; PNNR 16 *bgrt*; Hismaic JS 707.

-s. of *wʾln* -s. of *bnbrḥ* JS 707

bgl *bagula* ‘be in a good state, respected’, *bajāl* ‘honoured, corpulent, forbearing, rough’: CIK 219,2 *Bajal*; ID 302 *Banū Bajāl*; Cantineau 70 *bglw*; PNNR 16; HIn 94 Saf.; Hismaic KJB 162.

bglt See *bgl*: CIK 219,2 *Bagāla*, *Bagīla*, *Bagla*: ID 119 *Banū Bagālah*, 302 *Banū Baglah*; Hismaic AMJ 52, KJA 191*, KJB 77, KJC 5, KJC 628.

-fa. of *ḫgg* AMJ 52, KJB 77

-fa. of *ʿm* KJA 191*

-s. of *zdlh* -fa. of *ḫgg* KJC 5

bḫs²s² See *ḫs²s²*: Cantineau 70 *bḫšwšw*; Hismaic KWM 13, KWM 17.

-fa. of *ʾklbn* KWM 13

-s. of *ʿbb* KWM 17

bd *badda* ‘part one’s legs’, *budd* ‘amplitude’, *bidd* ‘a share, fellow’: cf. CIK 228,1 *Budaid*; HIn 96 Saf.; Tham ? HU 690*; Hismaic KJC 618a*.

bḏ ʾb Cmpd., see *ḏ ʾb*: Hismaic SSA 13*.

br See *brr*, *barr* ‘pious’: CIK 224,2 *Barr*; WR 107 *Barr*; HIn 99 Saf. (doubtful); Hismaic AMJ 68*, KJC 411, KJC 751.

-fa. of *ʾn ʿm* AMJ 68*

brʾ *bariʾa* ‘be free’, *barīʾ*, *barāʾ* ‘free’: CIK 224,1 *Barāʾ*; ID 244, etc.; WR 106; Cantineau 74 *brʾw*; PNNR 17; Stark 78 *brʾ*; HIn 99 Saf.; Hismaic CTSS 2b*, JS 706, JS 721, JS 754.

brḥt *bariḥa* ‘go away, depart’, *barḥ* ‘difficulty’, *burḥah* ‘the best of anything’: Hismaic KJC 147j.

-s. of *qdmt* -fa. of *bmṭr* KJC 147j

brd *barada* ‘be still, quiet’, *baruda* ‘be cold’, *bard* ‘cold’, *burd* ‘a kind of garment’: CIK 229,2 *Burd*, *Buraid*; LittNE 1 19 *brdw*; HIn 101 Saf.; Hismaic JS 35*, KJA 28, KJA 190, KJA 332*, KJA 345, KJB 78, KJB 84, KJB 87, KJB 140, KJB 144, KJC 20, KJC 100, KJC 114, KJC 174, KJC 329* (fem.), KJC 372, KJC 448, KJC 638, KJC 645, KJC 705, KJC 737; PNNR 17 *brdw*.

-fa. *ʾn ʿm* KJA 190, KJB 78, KJB 84, KJB 87, KJB 144, KJC 20, KJC 372, KJC 448, KJC 645, KJC 705, KJC 737

-fa. of *(s¹) ʿdlh* JS 35*

-d. of *ʿlm* KJC 329*

-s. of *mtr* -fa. of *ʾn ʿm* KJA 332*, KJC 638

-s. of *ʾṯḏ* -fa. of *ʾn ʿm* KJC 114, KJC 174

brr *barra* ‘be pious’ *bārir* ‘pious’: WR 159 *Burair*; HIn 101 Saf.; Hismaic KJA 220, KJB 83, KJC 128, KJC 147a, KJC 257, KJC 350, KJC 668.

-s. of *ʾs¹mnt* KJC 128, KJC 257, KJC 668

brs²t *baraš* ‘small specks in the hair of a horse differing from the rest of the colour’: cf. CIK 224,2 *Baršāʾ*; cf. Cantineau 56 *ʾl ʾbršw*; PNNR 10; Hismaic AMJ 36.

-s. of *ṣ ʿdt* AMJ 36

brq *baraqa* ‘shine, gleam’, *bāriq* ‘shining, gleaming’, *barq* ‘lightning’: CIK 224,2 *Bāriq*; ID 265 etc.; WR 107; Stark 80 *brq*; HIn 102 Lihyn (doubtful), Saf.; Hismaic TIJ 11*.

brqs¹ Cmpd. Aram. *bar* ‘son’ + *qs¹*? : HIn 102; Hismaic HU 675.
-fa. of *ḥ*-*b* HU 675

brqs² *barqaša* ‘paint in various colours’, *birqiš* ‘a certain bird’: HIn 102; Hismaic KJC 639, LAU 24, LAU 36, TIJ 110.
-s. of *ṭbb* LAU 24, TIJ 110

brky *baraka* ‘lie down, kneel’, *bark* ‘herd of kneeling camels’, *barākāʾ*, *burākāʾ* ‘firmness, steadiness in battle’, *bāraka* ‘bless’: cf. CIK 224,2 *al-Bark*, CIK 229,2 *Buraik*, *al-Burak*; cf. ID 151, ID 314, etc.; HB 11 *Bértsī*; cf. Cantineau 75 *brk, brkw*; PNNR 17; cf. Stark 79 *bryk* etc.; HIn 103; Hismaic MNM a 1.
-s. of *ʾbs¹lm* -s. of *brky* MNM a 1

brn See *brr*: HIn 103 Saf.; Hismaic KJB 11*.

bs¹ʿd Cmpd., see *s¹ʿd*: Hismaic Naveh TSB C.

bs¹ʿdʾl Cmpd., see *s¹ʿdʾl*: Hismaic JS 755*.

bs² *bašša* ‘be cheeful’ *bašš* ‘cheerful’; cf. CIK 225,2 *Bašša*; ID 129 *Banū Baššah*; Hismaic KJC 97b*, 187b, 601.

bs²mt *bašima* ‘suffer from indigestion’ *bašām* ‘balsam’: CIK 225,1; *Bašāma*; WR 108; ID 130; cf. Cantineau 75 *bšmh*; PNNR 17; HIn 107 Min., Sab.; Hismaic SSA 23.

bs²mn See *bs²mt*: HIn 107; Hismaic TIJ 505.

bṣr *baṣara* ‘endowed with mental perception’, *baṣīr* ‘knowing, understanding’: BDrN 6 *Baṣīr*; CIK 228,1 *Biṣār*; cf. Cantineau 55 *ʾbṣrw*; PNNR 10; WR 112; HIn 108 Saf. (place name only); Hismaic KJC 442b*.

bṣṣ *baṣṣa* ‘shine’, *baṣṣāṣ* ‘shining’: cf. HB 12 *Bṣeijiṣ*; Hismaic KJA 331*.

bṭ *baṭṭa* ‘slit’, *baṭṭ* ‘water fowl’: HIn 108 Saf.; Hismaic JS 671*.

bṭʾ *baṭuʾa* ‘be slow, tardy’, *baṭiʾ* ‘slow, tardy’: Hismaic AMJ 99.

bṭl *baṭala* ‘be false, courageous’, *baṭal* ‘courageous’: HIn 109; Hismaic TIJ 470.

-s. of *hrb* TIJ 470

bẓ See *bẓẓ*. Hismaic KJC 171.

bẓry *baẓira* 'have a protuberance on the upper lip', *baẓrāʾ* 'uncircumcised woman': Hismaic KJC 291.

-s. of *ns²r* -fa. of *whbʾḥwr* KJC 291

bẓẓ *ʾabaẓẓa* 'be fat', *baẓīẓ* 'fat, corpulent': Hismaic KJC 122*.

bʿ *bwʿ*, *bāʿa* 'outstretch one's arms', *byʿ*, *bāʿa* 'sell': cf. BDrN 7 *Baiyāʿ*; HIn 109 Saf.; Hismaic JS 632.

-s. of *mʿz* -s. of *ʾs¹d* JS 632

bʿb Cmpd., see *ʿb*: Hismaic KJB 15.

bʿdn *baʿuda* 'be remote, distant', *buʿd* 'distance': CIK 218,1 *Baʿdān*; ID 313; HIn 110; Hismaic MNM a 3.

-s. of *s¹ʿd* -fa. of *zn* MNM a 3

bʿr *baʿara* 'void dung', *baʿr* 'dung', *baʿīr* 'camel': CIK 224,1 *Baʿr*; HIn 111 Saf.; Hismaic KJC 140.

bʿlh Cmpd.?, Syr. *b^{e}ʿā* 'ask for' or from *bʿl*, see *mbʿl*: cf. Stark 77 *bʿʾ*; HIn 112 Saf. (doubtful); Hismaic AMJ 74*.

bʿhn See *ʿhn*. Hismaic KJC 162*.

bġ *baġā* 'seek, endeavour to find': Hismaic KJC 741.

bġṯt *baġiṯa* 'be dust coloured', *baġaṯ* 'dust-colour', *buġṯah* 'ashy white colour': cf. Cantineau 73 *bʿtw*, *bʿty*. HIn 112 *bġṯ* Saf.; Hismaic KJC 318.

bġḍ *baġuḍa* 'be hateful', *baġīḍ* 'hateful': CIK 219,2-220,1 *Baġīḍ*; ID 157; HIn 112 Saf.; Hismaic KJC 172, KJC 759.

bqqt *baqqa* 'speak a great deal', *baqaqah* 'chatterbox', *baqq* 'gnats, mostquitos', cf. BDrN 6 *Baqqān*; cf. HB 13 *Baggāh*; Hismaic KJC 5.

-s. of *s²hr* -fa. of *blqt* KJC 5

bql *baqala* 'grow hair' (said of a boy's face), *baql* 'tender plants': CIK 224,1 *Bāqil*; ID 167; HIn 114 Saf.; Tham.B JS 449*; Hismaic KJB 13*.

bkr *bakara* 'go out early in the morning', *bakr* 'youthful he-camel': CIK 221,1-222,1 *Bakkār*, CIK 222,1-223,2 *Bakr*, CIK 229,1 *Bukair*; WR 110; ID 31; HB 13 *Bökĕr*; Cantineau 71 *brkw*; PNNR 16; Stark 76 *brkw*; HIn

114 Saf.; Hismaic Rh 6, TIJ 58, TIJ 215, TIJ 237, TIJ 268, TIJ 273, TIJ 419, TIJ 453, WAM T 8 = TIJ 58.

-fa. of *mlk* TIJ 215, TIJ 237, TIJ 453

-fa. of *mqtl* Rh 6

-s. of *ḫl* -fa. of *mqtl* TIJ 268, TIJ 273

bls[1] *ʾablasa* 'despair, be silent', *balis* 'despairing': HIn 116 Saf.; Hismaic KJC 572*.

-s. of *rḫmt* KJC 572*

blṣt *balaṣa* 'extort', *balṣah* 'extortion': HIn 116 Saf. (doubtful); Hismaic KJC 711*.

blġ *balaġa* 'reach', *balāġ* 'sufficiency', *bāliġ* 'attaining an aim': CIK 223,2 *Balġ*; HIn 116 Saf. (doubtful); Hismaic TIJ 356.

-fa. of *ḫlf* TIJ 356

blq *balaq* 'black and white': HIn 116 Hismaic Eut 439; Hismaic 520.

-fa. of *ḫlṣ* TIJ 520

blqt See *blq*, *bulqah* 'black and white': HIn 116 Saf. add JaS 75b, JaS 158; Hismaic KJC 5.

-s. of *bqqt* -fa. of *wddʾl* KJC 5

bll *balla* 'moisten', *bilāl* 'water': CIK 223,2 *Ballāl*, CIK 226,1 *Bilāl*, CIK 229,1 *Bulail*; ID 112; BDrN 6 *Blîlī*; HB 13 *Bilāl*; HIn 117 Saf.; Hismaic KJA 57, KJC 699.

-s. of *ṣḫb* KJC 699

bln See *bll*: HIn 117 Saf.; Hismaic RTI A.

bmrt Cmpd., see *mr*, *marrah* 'once', *mart* 'barren land': HIn 117 Saf.; Hismaic JS 757.

bn *ibn* 'son' or see *bnn*: HIn 118 Saf.; Hismaic KJA 141, KJC 75a, KJC 417, LAU 17, TIJ 301.

-fa. of *rḫlʿ* LAU 17

-s. of *ḏʾn* TIJ 301

bnʾb Cmpd., see *bn* and *ʾb*: Hismaic KJC 164, KJC 461, KJC 462, KJC 467*, KJC 473, KJC 474, KJC 475, KJC 476, KJC 482, KJC 484*, KJC 486,

KJC 491, KJC 532, KJC 533, KJC 536, KJC 537a, KJC 563, KJC 694, KJC 706*.

bnʾr Cmpd., see *ʾr*. CTSS 1b*.

bnʾs¹ Cmpd., see *ʾs¹*. TIJ 466.

bnʾl Cmpd., see *bn* or *bny*: Cantineau 71 *ʾbnʾl*; PNNR 9; HIn 118 Saf., Tham.D WTI 73 (doubtful); Hismaic KJA 8*, KJC 335.

bnʾmt Cmpd., see *ʾmt*: Hismaic CTSS 1a, KJA 94, KJA 137*, KJB 110.

-s. of *ḍbʾ* -fa. of *(k)nn* KJB 110

-s. of *nʿmy* -fa. of *mḫr* KJA 94

bnbrḥ Cmpd., see *brḥ* under *brḥt*: Hismaic JS 707, TIJ 506.

-fa. of *wʾln* -fa. of *bgr* JS 707

bnbs¹r Cmpd., *basara* 'take something when fresh, quick in doing something', *busr* 'fresh', *basūr* 'lion': CIK 230,1 *Busr*; ID 73; HIn 105 *bsr* Saf.; Hismaic AMJ 87, KJA 118, KJC 415, KJC 634.

-s. of *s²kr* KJC 634

-s. of *ngr* AMJ 87

bnt See *bnn*, *bannah* 'sweet smell': Cantineau 72 *bntw*; PNNR 16 *bnt bntw*; HIn 119 Lihyn, Saf.; Hismaic AMJ 104, AMJ 147, Ph 345 *bis* a.

-s. of *zdʾl* AMJ 104

-s. of *ġnt* -s. of *ʾfṣy* AMJ 147

bntrb Cmpd., *tariba* 'be dusty', *tirb* 'one born at the same time': cf. BDrN 7 *Trābe*; HIn 131 *trb* Saf.; Hismaic KJC 284, KJC 611, KJC 640, TIJ 147*.

-s. of *ḫḍmn* TIJ 147*

bngrm Cmpd., see *grm*: Hismaic JS 732, TIJ 44*.

bnḥrb Cmpd., see *ḥrb*: HIn 119 Saf. C 5228; Hismaic AMJ 126.

bnḫmr Cmpd., see *ḫmr*: AMJ 14.

bndm Cmpd., see *ndm* or *dm*, *damma* 'smear with dye or blood', *dwm*, *dāma* 'last, endure': WAM T 16.

-fa. of *ndm*°WAM T 16

bnzʿg Cmpd., *zaʿaja* 'call, cry out', *zaʿaj* 'disquietude': TIJ 449a.

-s. of *ʾs* TIJ 449a

bns¹ ʿd Cmpd., see *s¹ ʿd*: TIJ 488.

bns² Cmpd. ?, see *ns²s²* and *ns²*: HIn 120 Saf.; Hismaic KJC 19, KJC 163*.

bns²br Cmpd., see *s²br*: Hismaic KJA 138.

-s. of *nbṭ* -fa. of *yḫld* KJA 138

bns² ʿy Cmpd., *ʾas² ʿā* 'spread, disperse oneself': Hismaic TIJ 476*.

bnṣrlh Cmpd., see *nṣr*: Hismaic KJC 27, KJC 525.

bnṣlh Cmpd., HIn 375 *ṣlh* Saf. (doubtful); Hismaic KJC 127.

bnẓ ʿn Cmpd., see *ẓ ʿn*: Hismaic LAU 23.

-s. of *qdm̌t* LAU 23

bn ʿḥ ?? : Hismaic TIJ 40.

bn ʿtq Cmpd., *ʿataqa* 'outrun' (a horse), *ʿitq* 'excellence', *ʿatīq* 'beautiful': CIK 204,2 *ʿAtīq*; ID 31; HB 38 *ʿÂtidz*, etc.; HIn 405 *ʿtq* Saf., Tham.D Ph 367 ag; Hismaic KJA 109*, KJB 5, KJB 98.

bn ʿml Cmpd., *ʿamala* 'work', *ʿamal* 'work': CIK 155,2 *ʿAmal*; HIn 440 *ʿml* Saf. etc.; Tham.B JS 309; Tham.C HU 149; Hismaic KJB 18; PNNR 52 *ʿmlw*.

bn ʿmh Cmpd., see *n ʿm* or *ʿamiha* 'be confused', *ʿamih*, *ʿāmih* 'confused'; HIn 442 *ʿmh* Saf.; Hismaic KJA 146, KJA 313, KJB 146*, KJC 493, KJC 608.

-s. of *mtr* KJA 313

bnlh Cmpd., see *bn*: HIn 121 Saf.; Hismaic AMJ 46, KJA 227, KJB 66, KJB 169, KJC 211, KJC 510; PNNR 9 *ʾbn ʾlhy*.

-fa. of *tm* KJB 66, KJB 169, KJC 211

-s. of *ḥbb* -fa. of *ḥbb* AMJ 46

bnmt Cmpd., *matta* 'extend, outstretch': Stark 98 *mtʾ*; HIn 526 Saf.; Tay. W Tay 4; Tham.D HU 89, JS 606; Hismaic AMJ 149*.

bnmṭr See *mṭr*: Hismaic KJC 147j, TIJ 496.

-s. of *brḥt* -s. of *qdmt* -s. of *ḥl ʾt* KJC 147j

bnng ʾt Cmpd., see *ng ʾt*: Hismaic KJC 82.

-fa. of *ʾs¹* KJC 82

bnn *banna* 'remain, dwell', *banīn* 'deliberate, intelligent': CIK 223,2 *Um al-Banīn*; Cantineau 72 *bnwn*; PNNR 16; HIn 121 Saf.; Hismaic AMJ 73, AMJ 122.

bny *banā* ‘build’ or dim. *ibn* see *bn*: HB 13 *Bānī*; Cantineau 72 *bny*, *bnyw*; PNNR 16; Stark 77 *bny*; HIn 122 Lihyn, Saf.; Hismaic KJA 28*, KJC 592, KJC 626*.

-s. of *s¹mnn* KJC 626*

bnyt See *bny*: HIn 122 Saf.; Hismaic KJA 120*, KJA 161, KJC 147d, TIJ 32, TIJ 40*.

-s. of *ʿmdn* -fa. of *[g]fft* KJC 147d

-s. of *rm* TIJ 40*

bhʾ *bahaʾa* ‘be friendly’, *bhw*, *bahā* ‘be beautiful’, *bahāʾ* ‘beauty, goodliness’: CIK 220,1 *Abu l-Bahā*; ID 285 *Abū al-Bahāʾ*; HIn 122 Saf.; Hismaic KJA 17, KJA 20, KJB 47, KJB 57, KJB 124, KJC 50a, KJC 71*, KJC 151.

-fa. of *ʾḫ** KJA 20

-fa. of *gḥfl* KJC 50a

-fa. of *grf* KJC 71*

-s. of *ʾs¹lm* -fa. of *gḥf* KJB 57

-fa. of *gḥfl* KJC 151

-fa. of *ftḥ* KJA 17

-s. of *ms¹lm* -fa. of *gḥf* KJB 47

bhs² *bahš* ‘kind’: WR 115 *Buhaiš*; HIn 123 Saf., Tham.C ? HU 714; Hismaic TIJ 91.

-fa. of *s¹hʔ(r)t* TIJ 91

bhm *bahm* ‘lamb’, *bahīm* ‘black’: HIn 124 Saf.; Hismaic TIJ 227.

bhn Cmpd., see *hn*: Hismaic KJB 154*.

bys¹ Hismaic KJC 442c*.

byn *bāna* ‘be separated, cut off, depart, be apparent’, *bayān* ‘being distinct, making distinct’, *bayyin* ‘apparent, manifest’: CIK 225,2-226,1 *Bayān*; HB 13 *Bājin*; HIn 126 Saf. (doubtful); Hismaic CTSS 2a*.

tʾm *tawʾm* ‘twin’: CIK 545,1 *at-Tauʾam*; ID 206; HIn 127 Saf.; Hismaic KWM 4, KWM 6, KWM 8; PNNR 67 *tʾwmʾ*.

-fa. of *qs¹r* KWM 8

-s. of *ʿqrb* KWM 4

-s. of *qs¹r* KWM 6

tbʿ *tabiʿa* ‘follow, prosecute’, *tibʿ* ‘passionate lover’, *tābiʿ* ‘follower’: CIK 545, 2 *Tibaʿ*; Hismaic AMJ 11*.

tblt *tabala*, ‘pursue with enmity’, *tabl* ‘hostility’: HIn 128; Hismaic 438.

-s. of *hnʾlh* TIJ 438

tḥbb See *ḥbb*, *taḥabbaba* ‘show affection’: HIn 129 Saf.; Hismaic AMJ 54, KJC 527.

tḫnn See *ḫnn*. HIn 130; Hismaic JS 723*, TIJ 15.

-fa. of *ddh* JS 723*

-s. of *mʿ-* TIJ 15

tr *tarra* ‘be separated, severed’, *tārr* ‘fat, plump’, *twr*, *tāra* ‘run, flow’: Cantineau 155 *twr*, Cantineau 156 *tryw*; PNNR 67; HIn 131 Saf.; Hismaic KJA 122.

ts¹b fem., *sabba* ‘cut, wound, revile’: Cantineau 158 *tšb*; PNNR 69; Hismaic TIJ 280.

-d. of *ʾr* TIJ 280

ts¹q *saqā* ‘water’, *tasaqqā* ‘be watered, irrigated’: cf. Cantineau 153 *šqy* and *šqylt*; PNNR 66; Hismaic KJA 25, KJB 178.

-s. of *zbd* KJA 25

tṣr See *nṣr* or *ṣariya* ‘remain stagnant’, *ṣarā* ‘protect’: HIn 133 Lihyn, Saf.; Hismaic KJC 291.

-fa. of ---- KJC 291

tʿmr See *ʿmr*: Cantineau 157 *tʿmrw* fem.; PNNR 69; HIn 134 Saf.; Hismaic WA 10379 fem. ?.

tġṯ See *ġṯ*: Hismaic KJC 681.

tkrṭ Hismaic LAU 20*.

tkl Hismaic AMJ 94*.

tm See *tym*, *tamma* ‘be complete’, *tāmm* ‘complete, perfect’: CIK 543,1 *Taim*; ID 59 etc.; WR 447; Cantineau 155 *tymw, tymʾ*; PNNR 67, PNNR 68; Stark 117 *tymʾ*, *tymw*, *tymy*; HIn 136 Lihyn, Saf.; Hismaic AMH 1,121, CSP 2, JS 591, KJA 86, KJA 310, KJA 355*, KJB 3, KJB 66, KJB

96, KJB 169, KJC 121, KJC 192, KJC 211, KJC 212, KJC 218, KJC 270, KJC 271, KJC 394, KJC 421, KJC 509, KJC 667*, KWM 9, LAU 41, Meek, NST 1, Rh 5, SSA 12, TIJ 38, TIJ 49 + TIJ 52, TIJ 51*, TIJ 54, TIJ 55*, TIJ 56*, TIJ 102, TIJ 107, TIJ 108, TIJ 144, TIJ 156, TIJ 224, TIJ 228, TIJ 429.

-fa. of *ʾs¹lh* KJC 271

-fa. of *ʾmrʾl* TIJ 51*, TIJ 55*

-fa. of *rṯ* AMJ 1

-fa. of *zdqm* KJB 3

-fa. of *s¹ʿdlh* LAU 41

-fa. of *ʿmrʾl* TIJ 56*

-fa. of *ʿhn* KJC 270

-fa. of *qṯ* KJC 394

-s. of *ʾmrʾl* TIJ 54, TIJ 102, TIJ 107

-fa. of *ʿmrʾl* TIJ 49 + TIJ 52

-s. of *bnlh* KJB 66, KJB 169, KJC 211

-s. of *tm-* SSA 12

-s. of *tmd* TIJ 108

-s. of *znd* KJA 310

-s. of *s¹lm* TIJ 228

-s. of *ʿbd* -fa. of *ʾs¹d* KWM 9

-s. of *ʿṣm* -fa. of *zdqm* KJC 212

-s. of *ʿmr* JS 591

-fa. of *s²hr* -fa. of *ʿbdqns* TIJ 38

-s. of *(ġ)m* KJC 667*

-s. of *km̊* TIJ 144

-s. of *mqm* TIJ 429

-s. of *n--* KJC 121

-s. of *n--ḫ°* -s. of *ḫ(r)gt* Rh 5

-s. of *nr* TIJ 224

-s. of *wʿl* AMJ 121

-s. of *wgdt* KJA 355*

-s. of *wgd[t]* KJC 218

tmʾḥwr Cmpd., see *tm* and *ʾḥwr*: HIn 136; Hismaic TIJ 323.

-s. of *flg* -s. of *zd* TIJ 323

tmʾs¹ Cmpd., see *tm* and *ʾs¹*: cf. Cantineau 65 *ʿbdʾysy*; PNNR 46; HIn 137 Lihyn JS 359 (doubtful), Saf. and cf. *ʿbdʾs¹* HIn 397 Saf.,; Hismaic AMJ 5.

tmʾl Cmpd., see *tm*: HIn 137 Saf.; Hismaic AMJ 39a, AMJ 40, KJB 36, KJC 202, KJC 224, KJC 296*, KJC 320, KJC 508.

-fa. of *bgt* KJC 224

-s. of *nht* KJA 202

-fa. of *bgt* KJC 508

tmgrb Cmpd., see *tm*, *jarab* 'mange, scab', *girāb* 'a bag for travellers': CIK 258, 1 *Abu l-Jarbāʾ*; ID 124; Stark 82 *grbʾ* (uncertain); HIn 157 *jrb* Min.; Hismaic TIJ 97

tmḥry Cmpd., see *tm* and *ḥry*: Hismaic JS 715*.

tmd *tamādā* 'last long': HIn 137 Saf.; Hismaic TIJ 105, TIJ 108, WAM T 14.

-fa. of *tm* TIJ 108

-fa. of *ʿbd* WAM T 14

-fa. of *hnʾ* TIJ 105

tmds²r Cmpd., see *tm*: Cantineau 156 *tymdwšr*; PNNR 68 *tymdwšr*; Hismaic CSP 2.

-s. of *flgt* -s. of *wtr* -s. of *ṣrm* CSP 2

tmʿ Cmpd., *tm* + *ʿ* or *tamaʿʿā* 'spread (evil)': HIn 137 Saf.; Hismaic TIJ 15*, TIJ 229*.

-fa. of *ʿbd* TIJ 229*

tmʿbdt Cmpd., see *tm* and *tym*: Cantineau 156 *tymʿbdt*; PNNR 68; HIn 137 and HIn 141 Sab. *tymʿbdt*; Hismaic TIJ 190.

-s. of *s²fr* -s. of *tmʿbdt* -fa. of *whblh* TIJ 190

-fa. of *s²fr* TIJ 190

tmʿbḏt See *tymʿbdt*: Hismaic RTI A.

tmʿbs² Cmpd., see *tm*, *ʿabš* ‘ignorance, convenience’, *ʾaʿbaša* ‘improve’: HIn 402 *ʿbs²* Saf.; Hismaic LAU 18.

tmktb Cmpd., see *tmktby*: Hismaic TIJ 28*.

-s. of *ṣḥm* TIJ 28*

tmktbʾ Cmpd., see *tmktby*; Hismaic SIAM 43.

tmktby Cmpd., see *tm*: See Strugnell 1959: 31 JS Nab 142 *tymlktbʾ*; Milik and Starcky 1975: 116-119 *tymʾlktbʾ*, *tymlktbʾ*; Hismaic TIJ 38*, TIJ 285; PNNR 68 *tymʾlktbʾ*.

-s. of *ḥrzt* TIJ 285

-fa. of *s²hr* -fa. of *ʿbdgns²* TIJ 38*

tmlt Cmpd. CIK 543,1 *Taimallāt*; ID 117 etc.; Stark 117; HIn 137; Hismaic TIJ 28, TIJ 482.

-s. of *hnʾlh* TIJ 482

tmlḥwr Cmpd., see *tm* and *ḥwr*: Hismaic KJC 2, TIJ 434.

-s. of *ʾys¹* -fa. of *s¹ʿd* TIJ 434

-s. of *whblh* -fa. of *hnʾlh* KJC 2

tmlh Cmpd., see *tm*: CIK 543,1 *Taimallāh*; ID 212 *Banū Taimallāh*; WR 447; Cantineau 155 *tymʾlhy*, *tymlhy*, Cantineau 156 *tmlhy* ?; PNNR 68; HIn 138 Lihyn, Saf.; Hismaic AMJ 3, KJA 132, KJC 204, KJC 348*, KJC 575, KJC 658, KJC 703, KJC 766 Meek, MNM a 1*, MNM b 6, TIJ 278, TIJ 347, TIJ 415.

-fa. of *ʾs¹lh* -fa. of *ʿm* MNM a 1*

-fa. of *gs²m* TIJ 415

-fa. of *ḥddn* -fa. of *ʾbrq* AMJ 3

-fa. of *kmy* KJA 132, KJC 575

-s. of *ḫly* TIJ 347

-s. of *dql* -fa. of *nmr* TIJ 278

-s. of *ʿbd* KJC 703

-s. of *wtr* -s. of *ms¹lm* MNM b 6

tn See *tnn*, *tann* ‘equal in age etc.’: Hismaic KJC 299.

tntn Heb. *nātan* ‘give’: Cantineau 157 *tntnw* (under *tntlw*); cf. HIn 581 *ntn* (and see Müller 1980: 72); Saf., Tay. JS 458, JS 559, JS 560, Tham.B HU 446; Hismaic KJC 289*.

tnn *tanna* ‘remain, dwell’, *tanīn* ‘an equal in age etc., companion’: HIn 139 Saf., Tham.D JS 440; Hismaic KJA 48, KJC 183, KJC 758, KJC 761, TIJ (as Tr.N) 504, TIJ 505.

-s. of *s¹dn* -s. of *ḫyb* KJC 183

-s. of *hnʾ* KJA 48

-s. of *zdqm* KJC 758

thnʾ See *hnʾ*, *tahannā* ‘prosper’: HIn 140; Hismaic TIJ 281.

-s. of *ḫrzt* TIJ 281

tym *tāma* ‘love excessively, enslaved by love’, *taym* ‘servant’,: HIn 141 Saf.; Hismaic TIJ 460.

-s. of *ḫrgl* -fa. of *whblh* TIJ 460

ṯbr *ṯabara* ‘confine, prevent, destroy etc.’, *ṯābir* ‘suffering loss, astray’: CIK 546,1 *Ṯābir*; WR 447; Stark 116 *tbrʾ*; HIn 142 Saf.; Hismaic KJB 46*, KJC 568, KJC 716, KJC 716a, KJC 719.

-fa. of *ẓʿn* KJC 716

-fa. of *krh* KJC 716a

ṯtmt cf. HIn 143 *ṯtm* Saf.; Hismaic KJA 31.

-fa. of *qn* KJA 31

ṯr *ṯāra* ‘be roused, excited’, *ṯawr* ‘bull’, *ṯarr* ‘holding much water’: CIK 553,1-2 *Ṯaur*; ID 212 *al-Ṯaur*; Cantineau 155 *twrʾ*, Cantineau 156 *tyrw*; PNNR 67; Stark 116 *twry*; HIn 144 Saf.; Hismaic KJC 250.

ṯrʾ See *ṯry*; Hismaic 236.

ṯry *ṯrw*, *ṯarā* ‘increase, become rich’, *ṯarāʾ* ‘wealth’, *ṯariy* ‘rich’, *ṯry*, *ṯarā* ‘become moist’: HIn 145 Saf.; Tham.C WTI 7; Hismaic KJB 109.

ṯʿt HIn 145 Saf.; Tham.B JS 287; Hismaic KJC 347.

ṯʿlbn *ṯuʿlabān* ‘male fox’: CIK 553,1 *Ṯaʿlabān*. Hismaic KJA 64*, KJB 25, KJC 143.

t ʿlt — *ṯu ʿl* ‘excess tooth’, *ṯu ʿīlah* ‘fox’: ID 231 *al-Ṯu ʿal*, *al-Ṯu ʿlah*; HIn 146; Hismaic JS 690.

-s. of *rbbt* JS 690

tfnt — *ṯafina* ‘be rough or callous (hands)’, *ṯafana* ‘impel, drive’, *ṯafinah* ‘callous protuberance’: Hismaic KJC 519.

ṯkm — *ṯakama* ‘track’, *ṯakima* ‘remain’: cf. HIn 147 *ṯkmtn* Sab.; Hismaic TIJ 161, TIJ 193, WAM T 32.

-fa. of *ḫrm* TIJ 193

-fa. of *dgg* -fa. of *ns¹* TIJ 161

-fa. of *ns¹ʾ* WAM T 32

ṯnt — *ṯinnah* ‘fetlock’, *ṯinn* ‘dry herbage’, HIn 148 Sab.; Hismaic TIJ 352.

-fa. of *khln* TIJ 352

gʾn — *jāna* ‘be black’: Cantineau 76 *gʾnyw*; PNNR 18 *gʾnyw*; HIn 151 Saf.; Hismaic AMJ 97*.

-fa. of *ḫy* AMJ 97*

gʾnt — See *gʾn*, *juʾnah* ‘a receptable for perfumes’: HIn 151 Saf.; Hismaic TIJ 21.

gbḥ — Hismaic KJA 3*.

gbn — *jabuna* ‘be cowardly, weak’: Hismaic KJA 163.

gṯṯ — *jaṯṯa* ‘pull up or out’, *juṯṯ* ‘elevated ground’, *juṯṯah* pl. *juṯaṯ* ‘body’: Hismaic KJC 443.

-s. of *hml* -fa. of *s¹ny* KJC 443

gḥs² — *jaḥaša* ‘scratch’, *jaḥš* ‘a young ass’: CIK 255,2 *Jaḥš*, CIK 262,2 *Jiḥāš*; CIK 264,2 *Juhaiš*; ID 177 *Jaḥḥāš*; WR 178 *Jaḥāš*, 179; BDrN 7 *Ǧaḥš*; HB 14 *Ǧḥeiš*; HIn 153 Saf.; Hismaic AMJ 48*, KJC 61, KnEG 5, TIJ 112, TIJ 128, TIJ 164*.

-fa. of *hnʾ* KnEG 5

-s. of *s²kt* TIJ 128

-s. of *s²k* -s. of *dḥlt* TIJ 112

-s. of *qbbt* AMJ 48*

gḥf — *jaḥafa* ‘strip away’, *juḥāf*, *jāḥif* ‘uproot, carry away’: CIK 255,2 *al-Jaḥḥāf*, *al-Jāḥif*, CIK 264,1 *Juḥāf*; ID 187 *al-Jaḥḥāf*; Hismaic KJA 20,

KJA 217, KJA 293, KJB 28, KJB 47, KJB 57, KJC 32*, KJC 109, KJC 150, KJC 767.

-s. of *bhʾ* -s. of *ʾs¹lm* KJB 57

-s. of *ms¹lm* KJB 47

gḥfl *jaḥfala* 'throw someone to the ground', *jaḥfal* 'an army a great man': CIK 255,2 *Jaḥfal*; HIn Saf.; Hismaic KJA 17, KJA 158, KJB 44, KJB 55, KJB 136, KJB 172, KJC 50a, KJC 56*, KJC 72, KJC 104, KJC 151, KJC 238*, KJC 326, KJC 428*, KJC 559*.

-fa. of *ftḥ* KJB 172

-s. of *bhʾ* KJC 50a

-s. of *ʾs¹lm* KJC 151

-fa. of *ftḥ* KJA 17

-s. of *-hʾ* -s. of *shn̊l̊h* KJB 44

gdlt *jadala* 'be hard, strong, twist a rope', *jadl* 'hard, strong', *jadīl* 'firmly twisted' or cmpd., *jadd* 'fortune' + *lt*: CIK 252,1 *Jadīla*; ID 194 etc.; WR 175; cf. Cantineau 77 *gdlw*; PNNR 18; cf. Stark 81 *gdylt* 'My fortune is *Allāt*'; cf. HB 14 *Ǧedla* fem.; HIn 155 Saf., cf. HIn 154 *gdʾl* Saf. and HIn 155 *gdʾl* ? Saf.; see Müller 1980: 72; Hismaic AMJ 61.

gdy *jadiy* 'kid', *jād in* 'locust': Cantineau 76 *gdyʾ*, Cantineau 77 *gdyw*; PNNR 18; CIK 263,2 *Judaiy*; ID 207; WR 186; Stark 81 *gdʾ*, *gdyʾ*; HIn 156 Saf.; Hismaic WTI 11.

gḏmt *jaḏima* 'cut off', *juḏmah* 'amputated arm or hand'; CIK 252,1-253,1-2 *Jaḏīma*: ID 169, etc.; WR 175; Cantineau 77 *gdymt*; HIn 157 Lihyn (doubtful); Hismaic TIJ 516*.

-fa. of *ʿnm* TIJ 516*

gr *jarra* 'drag', *jarr* 'foot of a mountain', *jāra* 'act wrongfully', *jawr* 'tyranny': CIK 267,1 *Jurr*; cf. ID 141 *Jarīr*, ID 212 *Jurair*; WR 183; HIn 157 Saf.; Hismaic KJC 215, KJC 733, KJC 736.

-s. of *ʿs²b* KJC 733

grt See *gr*: WR 160 *Jurra*; cf. HB 14 *Ǧarrā* fem.; HIn 158 Saf.; Hismaic AMJ 75.

-s. of *zdmnt* AMJ 75

grḏ *juraḏ* ‘rat’; HB 15 *Ǧreiḏī*; HIn 158 Saf.; Hismaic TIJ 255*.

grs² *jaraša* ‘bruise or pound’, *jariš* ‘bruised or pounded’: CIK 267,1 *Juraš*; ID 311; WR 183 *al-Jarīš*; BDrN 7 *Ǧarêš*; Cantineau 80 *grsw*; PNNR 19 *grys²*, PNNR 20; HIn 158 Saf., Tham.D Eut 130 (doubtful); Hismaic KJA 296*, KJA 695.

-s. of *ṭrq* TIJ 141

grs²ʿ *jurša ʿ* ‘large camel or horse’, *jarāši ʿ* ‘a deep wadi’: Saf. JaS 156, Tham.C or D JS 40, Hismaic KJC 739, TIJ 13, TIJ 402.

-s. of *ṭnn* TIJ 13

-s. of *nḥl* TIJ 402

grf *jarafa* ‘remove completely’, *jurāf* ‘a torrent that carries away everything, a voracious man’; cf. HB 15 *Ǧirfān*; Cantineau 80 *grfw*; PNNR 20; HIn 159 Mixed WTI 96, Saf.; Hismaic KJA 21, KJA 46, KJA 50, KJA 171, KJA 216*, KJA 277, KJB 122, KJC 34*, KJC 48, KJC 51, KJC 60, KJC 69, KJC 71, KJC 95, KJC 103, KJC 152, KJC 161, KJC 419, KJC 585, KJC 613, KJC 696, KJC 734, TIJ 57.

-fa. of *---y* TIJ 57

-s. of *bh(ʾ)* KJC 71

-s. of *mhṣ* KJA 21, 46

grm Syr. *gᵉram* ‘decide’; *jarama* ‘cut off’, *jarm* ‘hot’, *jarām* ‘dry dates’: CIK 258,1 *Jārim*, CIK 259,2 *Jarm*; ID 117; Cantineau 79 *grmʾ*, *grmw*, *grymw*; PNNR 19, PNNR 20; Stark 82 *grymy*; *grmy*; HIn 159 Lihyn, Saf.; Hismaic AMJ 106, KJB 22, KJC 13, KJC 550, Rh 2*, TIJ 12a, TIJ 58a, TIJ 113, TIJ 198, TIJ 219, TIJ 259, TIJ 333, TIJ 385.

-fa. of *--dlh* Rh 2*

-fa. of *ḥrmn* TIJ 113, TIJ 219

-fa. of *ḍḥk* TIJ 12a

-s. of *ḥrm* -s. of ʾ*y*ʿKJC 13

-s. of *ḫlṣt* TIJ 58a, TIJ 259

-s. of *zdʾl* -fa. of *mty* KJB 22

-s. of *s¹ʿd* -fa. of *(s¹)rm* TIJ 198

grmʾl Cmpd., see *grm*: LittNE 1 20 *grmʾl*; HIn 159 Saf.; Hismaic TIJ 349; PNNR 19 *grmʾl*, *grmʾlʾ*.

-s. of *ʿṯmn* TIJ 349

grmt See *grm*, *jarīmah* 'the last of one's offspring': HIn 159 Saf.; Hismaic KJB 106, KJB 143.

-s. of *qnlh* KJB 143

grmʿ Cmpd., see *grm*: Hismaic TIJ 75.

-s. of *ḫbr* TIJ 75

grmlh Cmpd., see *grm*: Cantineau 79 *grmʾlhy*, *grmlhy*, *grmʾlbʿly* etc.; HIn 159 Lihyn, Saf.; Hismaic AMJ 142, CTSS 1a, KJC 200, KJC 266, TIJ 483; PNNR 20 *grmʾlh*.

-s. of *bnl--* -fa. of *flg* TIJ 483

-s. of *flg* -s. of *grmlh* TIJ 483

-s. of *s²kmlh* KJC 200

grmnt See *grm*, *jirmān* 'body' or cmpd. *grm* + *mnt*: Hismaic KJC 6, TIJ 210.

gryt *jarā* 'run', *jāriyah* 'ship, young woman': CIK 259,1-2 *Jāriya*; WR 182; HIn 160 Saf.; Hismaic TIJ 134, WAM T 34.

-s. of *ʿbd* WAM T 34

-s. of *hml* TIJ 134

gs¹ *jassa* 'feel', *jsw*, *jasā* 'be hard, rough': Hismaic KJC 662a*, TIJ 236.

-s. of *ʿd* -fa. of *ʿm* TIJ 236

gs¹t See *gs¹*, *jassah* 'the five senses': Hismaic KJC 678.

gs²m *gašama* 'undertake something', *gušam* 'weight or heaviness': CIK 260, 2 *Jāšim*, CIK 261,1 *Jaušim* CIK 267,2 *Jušam*; ID 203 etc.; WR 189; Cantineau 80 *gšmw*; PNNR 20; HIn 162 Lihyn, Saf., Tay. JS 455, Tham.B HU 480; Hismaic JS 695* (Tr.N) (or read *gs²mw*), JS 705, JS 710, KJC 445, KJC 544, KJC 546, KJC 548, KJC 558, KJC 614, KJC 618, KJC 622*, KJC 632, KJC 684, KJC 746, KJC 771*, TIJ 200, TIJ 415.

-s. of *tmlh* TIJ 415

gs²mt See *gs²m*: AMJ 65.

g ʿṯm — *ju ʿṯūm* ‘a large penis’, *ja ʿṯama* ‘roll up, contract’: cf. CIK 260,1 *Ja ʿṯama*, 262,2 CIK *Ji ʿṯima*, CIK 269,2 *Ju ʿṯuman*; cf. ID 300 *Banū Ji ʿṯimah*; cf. WR 185; HIn 162 Saf.; Hismaic KJC 199, KJC 390.

g ʿd — *ja ʿuda* ‘be curly (hair)’, *ja ʿd* ‘curly hair’: CIK 251,2 *Ja ʿd*, CIK 262,2 *al-Ju ʿaid*; ID 202 *al-Ja ʿd*, ID 197 etc.; WR 174; HB 15 *Ǧa ʿad*; HIn 162 Saf.; Hismaic KJC 134, TIJ 329*.

-fa. of *ʾḫyʿ* KJC 134

gfft — *jaffa* ‘be dry’, *jafīf* ‘dry herbage’, *jafāfah* ‘scattered dry herbage’, *jaffah* ‘a company of men’: cf. CIK 261,1 *Juff*; HIn 163. Saf.; Hismaic AMJ 58*, KJC 147d*.

-fa. of *k ʾt* AMJ 58*

-s. of *bnyt* KJC 147d*

gl — *jalla* ‘be thick, great’, *jull* ‘main or greater part’: CIK 256,1 *jall*, CIK 265,1 *Jull*; Cantineau 78 *glw*; PNNR 18; Stark 82 *gl ʾ*; HIn 164 Saf., Tham.C WTI 50 ?; Hismaic KJA 329, KJC 619.

gm ʿ — *jama ʿa* ‘collect, gather’: CIK 256,2 *Jāmi ʿ*, *Jamū ʿ*, CIK 265,1 *Jumai ʿ*; ID 191; WR 179 *Jam ʿ*; HB 16 *Ǧāmi ʿ*; LittNE 1 19 n.pr.? *gm ʿ*; HIn 167 Saf., Tham.B JS 320 (doubtful); Hismaic TIJ 58.

gml — *jamala* ‘collect, melt fat, be beautiful’ *jamal* ‘male camel’, *jamīl* ‘beautiful, melted fat’: CIK 256,2 *Jamīl*, *Jammāl*, CIK 265,1 *Jumail*; Cantineau 78 *gmlw*; PNNR 19; ID 81; WR 180; BDrN 7 *Ǧammal* etc.; HB 16 *Ǧimel*; LittNE 1 19 *gmylw*; Stark 82 *gml ʾ*; HIn 167 Saf.; Hismaic KJA 92, KJB 58a, KJB 149, KJC 511, TIJ 33.

-s. of *zrt* KJC 173

gmhr — *jumhūr* ‘the main part of a body of men, the outstanding of them’: CIK 265,1 *al-Jumāhir*, *Jumhūr*; ID 248; WR 188; HB 16 *Ǧimhūr*; HIn 168 Saf.; Hismaic TIJ 58, TIJ 225.

-fa. of *km* TIJ 58

-fa. of *yḏr* TIJ 225

gn ʿ — Hismaic TIJ 464.

gy Cantineau 76 *ʾl-gʾ* and *ʾl-gyʾ*; Negev 1963: 113 *gʾyʾ*: cf. *al-Jī*, name of village near Petra, Starcky 1966: 987; see also *ʿbdg* and *ʿbdlg*. Hismaic KJC 42*, KJC 647 (Tr.N).

ḥb See *ḥbb*: *ḥibb*, *ḥubb* 'love': WR 364 *Ḥibb*; Cantineau 93 *ḥbw* fem.; PNNR 2; Stark 87 *ḥbʾ*; HIn 172 Saf., Tham.B HU 308; Hismaic KJA 150a, KJA 335, KJA 352, KJC 251, MuNJ 2, NST 1.

-s. of *ḫby* -fa. of *ḫ[ ](r)gt* MuNJ 2

-s. of *ḫrgt* KJA 352

-fa. of *ʾḥrs* MuNJ 2

-s. of *s²b* KJA 150a

ḥbb *ḥabba* 'be loved', *ḥabīb* 'beloved', *ḥubāb* 'a kind of snake': CIK 288,1-289,2 *Ḥabīb*, CIK 326,2 *Ḥubāb*, CIK 326,2-326-7 *Hubaib*; ID 50, etc., WR 191-192, HB 17 *Ḥabāb* etc.; Cantineau 93 *ḥbybw*; PNNR 27; LittNE 1 21 *ḥbybw*; Stark 87 *ḥbybʾ*; HIn 172 Lihyn, Saf., Tham.C Eut.7 = HU 7; Hismaic AMJ 45, AMJ 46, AMJ 49, JS 607 (Tr.N), KJC 304, Ph 307 b, WAM T 35.

-fa. of *bnlh* AMJ 46

-fa. of *ʿqrb* TIJ 243

-s. of *bnlh* -s. of *ḥbb* AMJ 46

-s. of *rgʿ* -fa. of *hnlh* -fa. of *whblh* AMJ 45, AMJ 49

ḥbbʾl Cmpd. See *ḥbb*: cf. Cantineau 93 *ḥbʾlhy*; PNNR 27; HIn 172, Tham.B JS 361-2; Hismaic KJC 47.

ḥbbt See *ḥbb*: CIK 287,1 *Ḥabāba*; ID 24; WR 190, WR 192-193 *Ḥabība* fem.; Cantineau 93 *ḥbbt* fem.; PNNR 27; Stark 87 *ḥbbt*; HIn 172 Saf.; Hismaic TIJ 171.

-s. of *ḏhbn*°TIJ 171

ḥbt See *ḥbb*, *hubbah* 'love', *ḥabbah* 'seed, grain': CIK 287,2 *Ḥabba*; ID 303; WR 191; *Ḥabba* masc. and fem.; Cantineau 93 *ḥbt* fem.; PNNR 27; Stark 87 *ḥbtʾ*; HIn 173 Saf.; Hismaic JS 711.

ḥbk *ḥabaka* 'bind, tie', *ḥabīk* 'bound, tied': CIK 323,2 *Ḥbk*; HIn 174 Saf., Tham. HU 296; Hismaic TIJ 58.

ḥbn See *ḥbb* or *ḥbn*, *ḥibn* ‘a boil, monkey’: CIK 287,2 *Ḥabbān*, CIK 323,2 *Ḥibbān*, CIK 327,1 *Ḥubain*; ID 24; Cantineau 93 *ḥbn* and cf. Cantineau 94 *ḥwbn*; PNNR 27; HIn 174-175 Saf.; Hismaic TIJ 258.

ḥby See *ḥbb* or *ḥbw*, *ḥabā* ‘draw near’, *ḥabiy* ‘collection of clouds’, *ḥibāʾ* ‘a gift’: ID 24 *Ḥubbā* fem.; Cantineau 93 *ḥby*; PNNR 27; Stark 87 *ḥby*; HIn 175 Saf.; Hismaic KJC 24*, TIJ 34*.

-s. of *ḏ--* TIJ 34*

-s. of *yġṯ* KJC 24*

ḥt *ḥatta* ‘scrape off’, *ḥatt* ‘swift, male ostrich’, *ḥūt* ‘fish’: CIK 337,1 *Ḥūt* and cf. *al-Ḥutāt*; cf. ID 148; Cantineau 95 and Cantineau 217 *ḥwtw* and cf. Cantineau 101 *ḥtyt* and *ḥttw* (Tr.N.); cf. Stark 90 *ḥty*; HIn 175 Saf.; Hismaic KJC 147i.

-s. of *ms¹k* -s. of *ʾʿfr* -s. of *ṣʿb* KJC 147i

ḥty See *ḥt*, *ḥty*, *ḥatiy* ‘skins of dates’: HIn 176 Saf. (uncertain); Hismaic AMJ 146.

ḥg See *ḥgg*, *ḥajj* ‘pilgrim’ or *ḥwj*, *ḥāja* ‘want, need’: CIK 291,1 *Ḥajj*; ID 298 *al-Ḥāj*; BDrN 8 *Ḥaǧǧī*; HB 17*; Cantineau 93-94 *ḥgw*; PNNR 27; LittNE 1 21 *ḥgw*; Stark 87 *ḥgʾ*; HIn 177 Saf.; Hismaic KJA 39*, KJA 128, KJA 376, KJA 579, KJC 202, KJC 262, KJC 686*, TIJ 221, TIJ 426.

-fa. of *ʾfṣ* TIJ 221, TIJ 426

-s. of *s¹ʿdt* KJC 202

-s. of *mh[ṣ]* KJA 128, KJA 686

ḥgg *ḥajja* ‘go towards’, *ḥajj* ‘pilgrimage’, *ḥajjaj* ‘frequent pilgrim’: CIK 291,1-2 *al-Ḥajjāj*; ID 77; Stark 87 *ḥggw*; HIn 177 Lihyn Saf., Tay. W Tay 1, Tay. W Tay, 5, Tay. W Tay 7b, Tay. W Tay 9-13; Hismaic AMJ 7, AMJ 52, KJC 330, KJB 77, KJC 5, TIJ 214, WAM T 17.

-s. of *bglt* AMJ 52, KJB 77

-s. of *zdlh* -s. of *hnʾlh* KJC 5

-s. of *s¹lm*°WAM T 17

ḥgs²t Hismaic KJC 364*.

ḥglt *ḥajalah* ‘a partridge’: cf. CIK 291,1 *Ḥajal*; cf. WR 140 *Ḥajl*; cf. BDrN 8 *Ḥağalī*; Hismaic AMH 56, KJC 242.

ḥd See *ḥdd*, *ḥadd* ‘prevention, limit’, *ḥādd* ‘sharp’ or *ḥyd*, *ḥāda* ‘turn, decline’, *ḥayd* ‘a prominence’: CIK 290,1 *Ḥadd*; Stark 87 *ḥdʾ*; HIn 178 Saf.; Hismaic CSP 2, KJA 232, KJA 323, WAM T 48.

ḥdt *ḥadaṯa* ‘be recent, new’, *ḥadīṯ* ‘new, recent’, *ḥidṯ* ‘storyteller’; HIn 179 Saf.; Hismaic AMJ 23*.

ḥdd *ḥadda* ‘prevent, sharpen’, *ḥudād*, *ḥidād* ‘sharp’: CIK 290,1 *Ḥadīd*, CIK 323,2 *Ḥidād*, CIK 327,2 *Ḥudād*; ID 277; Cantineau 94 *ḥddw*; PNNR 28; Stark 88 *[ḥ]dydw*; HIn 179 Saf., Tay. W Tay 31; Hismaic KJC 123*, TIJ 474, TIJ 492, WAM T 38*.

-fa. of *s¹ʿd* -fa. of *ʾs¹* TIJ 492

-s. of *ḥ̊ḏm* -fa. of *ʾtmt* WAM T 38*

-s. of *mr* TIJ 338

ḥddn See *ḥdd*: Stark 88 *ḥdwdn*; HIn 179 Saf.; Hismaic AMJ 3, TIJ 338.

-s. of *tmlh* -fa. of *ʾbrq* AMJ 3

-s. of *mr* TIJ 338

ḥds² Hismaic JS 696 + JS 695*, JS 743*, JS 756, JS 758.

ḥdl *ḥadil* ‘having one shoulder higher than the other’: CIK 327,2 *Ḥudāl*; HIn 180 Saf.; Hismaic TIJ 506*.

-s. of *ḥrkn* -s. of *ḥdlʾ* TIJ 506*

-fa. of *ḥrkn* TIJ 506*

ḥdmr HIn 180 Saf.; Hismaic KJB 88, KJC 188.

-s. of *ʿbd* -s. of *zdq(m)* KJB 88

-s. of *ʾʿbd* KJC 188

ḥdn See *ḥdd*: ID 299 etc. *Banū Ḥuddān*; WR 193 *Ḥaddān*; HIn 180 (not WH 3472); Hismaic TIJ 494.

ḥḏm *ḥaḏama* ‘cut off, be quick’, *ḥuḏum* ‘swift’, *ḥaḏim* ‘sharp’: CIK 290,1-2 *Ḥuḏaim*: ID 74; HIn 181; Hismaic WAM T 38*.

-fa. of *ḥd(d)* -fa. of *ʾtmt* WAM T 38*

ḥḏmt See *ḥḏm*: CIK 290,1-2 *Ḥaḏama*; ID 74 (name of a horse); HIn 181; Hismaic JS 247.

ḥr *ḥarra* 'be hot, be free', *ḥarr* 'heat', *ḥurr* 'free' or see *ḥwr*, *ḥūr* 'deficiency': CIK 333,2 *Ḥurr*, CIK 334,2 *al-Ḥurr*; ID 84, ID 228 *Ḥūr*; Cantineau 99 *ḥrw*, *ḥry*; PNNR 31; Stark 90 *ḥrʾ*; HIn 181; Hismaic JS 760, KJA 22, KJA 276, KJA 349, KJC 253, KJC 271, TIJ 37, TIJ 178, TIJ 238, TIJ 284.

-fa. of *s²ṣr* -fa. of *ḥrb* TIJ 238

-s. of *ʾdrm* KJA 349, KJC 253

-s. of *ʾs¹lh* -s. of *tm* KJC 271

-s. of *s²fr* TIJ 284

-s. of *y* KJA 222

ḥrb *ḥaraba* 'plunder', *ḥarb* 'war, warrior': CIK 299, 2-300, 1-2 *Ḥarb*, CIK 333,2 *Ḥurab*; ID 47 *Ibn Ḥarb*, ID 278 *Ḥarrab*; HB 18 *Ḥarb*; HIn 182 Saf., Tham.C JS 160; Hismaic TIJ 238, TIJ 243; PNNR 31 *ḥrbw*.

-s. of *s²ṣr* -s. of *ḥr* TIJ 238

ḥrt See *ḥr*: Cantineau 100 *ḥrtw*; PNNR 32; Stark 90 *ḥrtʾ*; HIn 182 Lihyn, Saf.; Hismaic TIJ 182, TIJ 357*.

-fa. of *wdʾt* TIJ 182

-s. of *s¹nm* TIJ 357*

ḥrgl *ḥargal* 'large wingless locust': Cantineau 99 *ḥrglw*; PNNR 31 *ḥrgl*; Hismaic TIJ 460.

-fa. of *tym* -fa. of *whblh* TIJ 460

ḥrzt *ḥaraza* 'be fortified', *ḥirz* 'fortified place': HIn 183; Hismaic TIJ 82, TIJ 281, TIJ 285, TIJ 288*, TIJ 290, TIJ 436, TIJ 452, TIJ 463, WAM T 1.

-fa. of *tmktby* TIJ 285

-fa. of *thnʾ* TIJ 281

-fa. of *ḥrs¹* WAM T 1

-s. of *s²ṣr* TIJ 82, TIJ 290

-s. of *wrb* TIJ 452

-s. of *mty* TIJ 463

ḥrs¹ *ḥarasa* ‘guard’, *ḥāris* ‘a guard’: CIK 299,2 *Ḥaras*, CIK 319,1 *al-Ḥarūs*; WR 206 *Ḥarīs*; Cantineau 100 *ḥrs*; PNNR 3; HIn 184 Saf., Hismaic AMJ 71, KJA 112, KJC 131, KJC 207, KJC 261, KJC 337, KJC 442a, KJC 516, KJC 522, KJC 605, KJC 615, KJC 692, Rh 7, TIJ 18e, TIJ 167, TIJ 250, TIJ 274*, TIJ 288, TIJ 399, TIJ 437, TIJ 447, WAM T 1.

-fa. of *s¹rq* TIJ 18e

-fa. of *ʿrs¹* KJC 207, KJC 261, KJC 337, KJC 516, KJC 615

-fa. of *ʿyḏ* TIJ 399

-fa. of *mrʾg(d)* TIJ 274*

-s. of *ʾs¹lm* -fa. of *ʿrs¹* KJA 112, KJC 442a

-s. of *ms¹lm* -fa. of *ʿrs¹* KJC 522

-s. of *ḥrzt* TIJ 288, WAM T 1

-s. of *dnʾlh* TIJ 447

-s. of *qdm* -s. of *rʿ* AMJ 71

ḥrs¹t See *ḥrs¹t*, *ḥarīsah* ‘something that is guarded’: Hismaic KJA 208.

-s. of *flṭt* KJA 208

ḥrs²t *ḥaraša* ‘hunt lizards’, *ḥāraša* ‘fight with’, *ḥaraš* ‘rough’, *ḥuršah* ‘roughness’: cf. CIK 299,2 *al-Ḥaraši*, CIK 324,2 *Ḥirāš*; cf. ID 181, ID 183 *al-Ḥarīš*, ID 208; cf. Cantineau 100 *ḥršw*, *ḥryšw*; PNNR 31 and PNNR 32; LittNE 1 22 *ḥryšw*; cf. Stark *ḥršʾ* and *ḥršw*; HIn 184; Hismaic TIJ 504.

-fa. of *ḥrkn* -fa. of *ʾs¹lh* TIJ 504

ḥrḏ *ḥaraḍa* ‘become corrupt’, *ḥaraḍ* ‘corruptness’; HIn 184 Saf. (read WH 2836a for 2833a); Hismaic KJC 367*.

ḥrk *ḥaruka* ‘move’, *ḥarik* ‘agile, alert’: HIn 184 Saf.; Hismaic KWM 12.

-s. of *ʿbdgd* KWM 12

ḥrkn See *ḥrk*: HIn 184 Saf.; Hismaic TIJ 504, TIJ 506.

-s. of *ḥrs²t* -fa. of *ʾs¹lh* TIJ 504

-s. of *ḥdl°* -fa. of *ḥdl°* TIJ 506

ḥrm *ḥaruma* ‘be forbidden’, *ḥaram*, *ḥarām* ‘forbidden’: CIK 299,1 *Ḥarām*, CIK 300,2 *Ḥarīm*; ID 154 *Banū Ḥarām*, ID 176 *Ḥuraim*; Cantineau 100

ḥrmw; PNNR 31 *ḥrym*; HIn 185 Lihyn, Saf., Tham.C JS 86, JS 93, JS 97, JS 106, Tham.D HU 771, JS 648; Hismaic KJA 29b, KJA 84, KJA 186, KJA 225, KJA 317*, KJA 340, KJB 85, KJC 13, KJC 21, KJC 55*, KJC 89, KJC 176, KJC 221, KJC 263, KJC 370, KJC 603, KJC 700, TIJ 83, TIJ 249, TIJ 405.

-fa. of *ʾsʿmnt* KJA 29b, KJA 186, KJA 225, KJC 21, KJC 55*, KJC 89, KJC 221, KJC 263

-fa. of *ktbt* KJB 85

-s. of *ʿyʾ* -fa. of *grm* KJC 13

-s. of *mtr* -fa. of *ʾsʿmnt* KJA 84, KJC 176, KJC 370, KJC 700, TIJ 83

ḥrmt See *ḥrm*, *ḥurmah* 'respected': CIK 300,2 *Ḥārimah*; HIn 185 Saf., Tham.B JS 33; Hismaic TIJ 277.

ḥrmn See *ḥrm*: HIn 185; Hismaic TIJ 113, TIJ 219, TIJ 259a, TIJ 318.

-fa. of *ṣbḥ* TIJ 318

-s. of *grm* TIJ 113, TIJ 219

ḥrw *ḥrw*, *ḥarwah* 'a burning feeling experienced through anger' or see *ḥry*: Hismaic KJC 308.

ḥry *ḥry*, *ḥarā* 'decrease, diminish', *ḥariy* 'adapted, suitable': HIn 186 Tham.C JS 171; Hismaic KJC 385*, TIJ 344*; PNNR 31 *ḥry*.

ḥzbr *al-ḥayzbūr* Caskel 1954: 141 JS L 267; Hismaic KJA 286*, KJC 25, KJC 90, KJC 97*, KJC 107, KJC 169, KJC 198, KJC 293, KJC 489.

-s. of *ʿbd* KJC 25, KJC 97*, KJC 489

-s. of *zdqm* KJC 107

-s. of *[]ʾʿbd* KJC 169

ḥzrm Lisan, *ḥazram* name of a mountain: ID 325 as Lisan; Hismaic KJA 172*.

ḥzrkn Hismaic TIJ 276.

ḥzmt *ḥazama* 'be firm, bind', *ḥazm* 'prudence, elevated ground', *ḥizāmah* 'girth': CIK 322,2 *Ḥazīma*; ID 57; cf. BDrN 8 *Ḥazm* etc.; cf. HB 18 *Ḥizām*; HIn 187 Saf.; Hismaic CTSS 1a.

ḥzyt *ḥzy*, *ḥazā* 'compute, conjecture'; HIn 188 Saf.; Hismaic KJA 318, TIJ 442*.

-s. of *w ʿḏ* KJA 318

ḥs¹ *ḥassa* ‘be compassionate, kill, slaughter’, *ḥiss* ‘perception’: HIn 188 Lihyn, Saf.; Hismaic Rh 4.

ḥs¹mt *ḥasama* ‘cut, cut off, cauterize’, *ḥusām* ‘sword’, *ḥusūm* ‘unluckiness’: cf. CIK 335, 1-2 *al-Ḥusām*; HIn 189; Hismaic NST 1.

ḥs¹n *ḥasuna* ‘be pleasing, beautiful’, *ḥasan* ‘good’ or see *ḥassa* under *ḥs*: CIK 319,1-2 *Ḥasan*, CIK 319,2-321,1 *Ḥassān,* CIK 335,1 *Ḥusain*; ID 266 etc.; WR 217; HIn 189 Saf., Tham.C JS 138; Hismaic LAU 16.

ḥs² See *ḥs²s²*: HIn 189 Saf.; Hismaic SIAM 44.

ḥs²s² *ḥašša* ‘dry, dry up’, *ḥaštš* ‘dried grass’: CIK 335,2 *Ḥušaiš*; WR 237; Stark 90 *ḥšš*; HIn 190 Saf.; Hismaic KJC 562; PNNR 32 *ḥššw*.

ḥṣd *ḥaṣada* ‘reap, cut’, *ḥaṣida* ‘be strongly twisted’ (a rope), *ḥaṣād* ‘the time of reaping’, *ḥāṣid* ‘a reaper’: HIn 190; Hismaic WTI 11 (Tr.N).

ḥṣr *ḥaṣura* ‘surround, be avaricious’, *ḥaṣir* ‘niggardly’: CIK 321,1 *Ḥaṣir*; HIn 190; Hismaic 304.

-s. of *whdt* TIJ 304

ḥḍrt *ḥaḍara* ‘ready, be present’, *ḥāḍir* ‘ready, settled’, *ḥaḍīrah* ‘a body of people engaging in plunder’: cf. CIK 290,2 *Ḥāḍir*, *Ḥaḍur*; cf. ID 127, ID 249; Hismaic TIJ 317, TIJ 398.

ḥṭṭn *ḥaṭṭa* ‘put down, alight’, *ḥuṭuṭ* ‘smooth body’, *ḥaṭūṭ* ‘a place of descent’: cf. *ḥṭṭ* HIn 193 Saf.; Hismaic RTI B*.

ḥ ʿl Hismaic KJC 88*.

ḥfẓ *ḥafiẓa* ‘keep, preserve’, *ḥāfiẓ* ‘keeping, preserving’: HIn 195 Saf.; Hismaic KJC 528, KJC 583a; PNNR 31 *ḥfṣ ʾ*.

ḥkm *ḥakama* ‘prevent, restrain, judge’, *ḥakīm* ‘wise’: CIK 294,1 *al-Ḥakam*, CIK 295,1-2 *Ḥakīm*, CIK 331,1 *Ḥukaim*; ID 47, ID 92; BDrN 8 *Ḥakīm*; HB 19 *Ḥâtsim*; Cantineau 96 *ḥkmw*; PNNR 29 *ḥkmw*; Stark 88 *ḥkym*; HIn 197 Saf., Tham.C JS 73; Hismaic TIJ 118, WAM T 30, WAM T 36*.

-fa. of *mtr* WAM T 30

-fa. of *m ʿl* WAM T 36*

ḥlʾt *ḥalaʾa* ‘strike, throw down, remove flesh from a hide’, *ḥlw*, *ḥalā* ‘be sweet’: HIn 197 Saf.; Hismaic KJC 147j.

-fa. of *qdmt* KJC 147j

ḥm *ḥamma* ‘be hot, be black’ (with heat), *ḥamm* ‘vehemence of heat, the chief part of a thing’ or *ḥwm*, *ḥāma* ‘hover’, *ḥawm* ‘a large herd of camels’: CIK 296,1 *Ḥām*; ID 305 *Banū Ḥām*; HIn 199 Saf.; Hismaic KJC 16*, KJC 40*.

ḥmgn *ḥammaja* ‘wink, sink (of eyes)’, *ḥammūj* ‘young antelope’: cf. HIn 200 *ḥmgt* Saf.; Hismaic Naveh TSB C.

ḥmdt *ḥamada* ‘praise’: cf. BDrN 8 *Ḥamed* etc.; HB 19; Hismaic KJB 43*; PNNR 30 *ḥmydw*.

-fa. of *s¹ḫ̊r* KJB 43*

ḥmrt *ḥamara* ‘pare a thong’, *ḥumrah* ‘brown, red’, *ḥummarah* ‘a type of bird’: CIK 332,2 *al-Ḥummarah*, CIK 332,2-333,1 *Ḥumra*; ID 135, ID 138, ID 137; Cantineau 97 *ḥmrt* fem.; HIn 200 Saf.; Hismaic KnEG 1, KnEG 2, KnEG 3, KnEG 4, KnEG 5.

ḥmzn *ḥamaza* ‘milk became sour, be robust’, *ḥāmiz* ‘sour, acrid’, *ḥāmiz* ‘strong (hearted)’, cf. HB 19 *Ḥamze*; HIn 201 Saf.; Hismaic TIJ 148*.

ḥms² *ḥamiša* ‘be slender’: HIn 201 Saf.; Hismaic JS 623*.

-fa. of *whbn* JS 623*

ḥmṭy *ḥamaṭa* ‘peel’, *ḥamāṭ* ‘wild fig’, *ḥamāṭah* ‘black blood of the heart’: HIn 201; Hismaic HU 498 (Tr.N).

ḥmlt *ḥamala* ‘carry, charge’, *ḥamal* ‘lamb’, *ḥamalah* ‘charge, assualt’, *ḥamūlah* ‘beast of burden’: CIK 296,2 *Ḥamala*, CIK 324,1 *Ḥimāla*; Cantineau 97 *ḥmlt*; PNNR 30; HIn 202 Saf., Tay. W Tay 15, Tham.C JS 153; Hismaic NST 1.

ḥmlg *ḥamlaj* ‘a strongly twisted rope’, *ḥimlāj* ‘goldsmith’s bellows’; Cantineau 97 *ḥmlgw*; PNNR 30 *ḥmlgw*; HIn Saf., add JaS 192; Hismaic TIJ 36, TIJ 58.

-s. of *ʾs¹lh* -s. of *khln* TIJ 36

ḥmly See *ḥml* under *ḥmlt*: HIn 202 Saf.; Hismaic KWM 14.

-fa. of *ngyt* KWM 14

ḥmn See *ḥm*, *ḥamn* ‘small ticks’: CIK 324,1 *Ḥimmān*; ID 150 *Banū Ḥimmān*; Cantineau 97 *ḥmyn*; PNNR 30; cf. Stark 89 *ḥmnwn*; HIn 203 Tay. W Tay 28; Hismaic TIJ 480.

ḥn *ḥanna* ‘yearn for, be compassionate’, *ḥānn* ‘yearning, longing’ or *ḥyn*, *ḥāna* ‘draw near (time, season)’: CIK 333,2 *Ḥunn*; ID 320; Stark 89 *ḥnʾ*; HIn 205 Saf.; Hismaic KJA 100, KJA 153; PNNR 30 *ḥnʾw*.

ḥnl Cmpd., see *ḥn* and *ḥnn*: HIn 206 Saf. correct to LP 667; Hismaic LAU 15.
-fa. of *ġnm* LAU 15

ḥnnt See *ḥnn*, under *ḥn*: HIn 207 Saf.; Mixed WTI 78; Hismaic KWM 8.
-s. of *tʾm* KWM 8

ḥwr *ḥwr*, *ḥāra* ‘return to’, *ḥawar* ‘intense whiteness/blackness’, *ḥūwār* ‘young camel’, *al-ḥawar* ‘the third star [&] that next the body, of the three in Ursa Major’: Cantineau 94-95 *ḥwrw*; PNNR 28; LittNE 1 21 *ḥwrw*, LittNE 234 *ḥwyrw*; cf. Musil 1926 59-60 n.20 Aŭαϱα; HIn 208 Lihyn, Saf., Tham.B HU 311 (doubtful), HU 707; Hismaic AMJ 60*.

ḥy *ḥayiya* ‘live’, *ḥayy* ‘living’: CIK 293,2 *Ḥaiy*; ID 197 ?; Cantineau 95 *ḥyw*, *ʾl ḥyw*, *ḥyʾ*, *ḥyyw*, *ḥyy*; PNNR 28; cf. Stark 88 *ḥyny*; HIn 209 Saf.; Tham.D TIJ 101; Hismaic AMJ 97*, TIJ 245, TIJ 494.
-s. of *gʾn* AMJ 97*

ḥyʾ *ḥāla* ‘be altered, stagnate’, *ḥayl* ‘stagnant water, strength’: HIn 211 Lihyn (doubtful) Saf.; Hismaic KJA 201*, WAM T 26*.
-s. of *mlk* WAM T 26*

ḫbʾ *ḫabaʾa* ‘hide, conceal’, *ḫabʾ* ‘hidden, concealed’: HIn 213 Saf.; Hismaic TIJ 494.
-s. of *qymt* -fa. of *qymt* TIJ 494

ḫbʾt See *ḫbʾ*, *ḫabʾīah* ‘concealed, hidden’: CIK 338,1 *Ḫabīʾa*; ID 213; HIn 213 Min., Sab.; Hismaic AMJ 35.
-s. of *ʿmr* AMJ 35

ḫbbt *ḫabba* ‘deceive, alight in depressed land’, *ḫabab* ‘a kind of run’, *ḫabibah* ‘fillet’: cf. CIK 338,1 *Ḫabbāb*, CIK 348,1 *Ḫubaib*; cf. ID 262; cf. WR 134; HIn 213 Tham ? WTI 35; Hismaic TIJ 50, TIJ 440.

-s. of *ʿbd* TIJ 50

-fa. of *ʾyt* TIJ 440

ḫbr *ḫabura* ‘know’, *ḫabr* ‘*sidr* trees’, *ḫubr* ‘knowledge’, *ḫābūr* ‘a certain plant’: CIK 338,1 *al-Ḫabāʾr*, 338,2-339,1 *Ḫaibari*; ID 308; Cantineau 93 *ḥbwrʾ*?; PNNR 27; Hismaic TIJ 75.

-fa. of *grmʿ* TIJ 75

ḫbrt See *ḫbr*, *ḫubrah* ‘portion, share’, *ḫibrah* ‘trial, proof’: Hismaic KJA 186, TIJ 324.

-s. of *ʾftḥ* -fa. of *ʾftḥ* TIJ 324

ḫby See *ḫbʾ*, *ḫibāʾ* ‘a kind of tent: Cantineau 93 *ḥbyw*; PNNR 27; HIn 215 Saf.; Hismaic MuNJ 2.

-fa. of *ḥb* -fa. of *ḫ[ ](r)gt* MuNJ 2

ḫt *ḫwt*, *ḫāta* ‘pounce on prey’, *ḫatta* ‘hit with a spear’: HIn 215; Hismaic JS 744.

ḫṯʿm *al-ḫaṯʿamah* ‘smearing of blood’: CIK 345,1 *Ḫaṯʿam*; ID 304; Hismaic JS 718.

ḫdmt *ḫadama* ‘serve’, *ḫidmah* ‘service’, *ḫudmah* ‘whiteness in the lower end of the shank’, *ḫadamah* ‘thong’: HIn 217 Saf.; Hismaic TIJ 23, WAM T 39.

-s. of *ʿhd* TIJ 23, WAM T 39

ḫḏmn *ḫaḏama* ‘cut, be quick’, *ḫaḏamān* ‘quickness of pace’: cf. WR 133 *Ḫiḏām*; cf. HIn 217 *ḫḏm* Saf.; Hismaic KJA 231, TIJ 147.

-fa. of *n[nt]rb* TIJ 147

-s. of *nht* KJA 231

ḫr *ḫāra* ‘be good’, *ḫayr* ‘good’, *ḫarra* ‘murmur, rumble’: CIK 339,1 *Ḫair*; Stark 88 *ḥyrʾ*, *ḥyry*; HIn 218 Saf.; Hismaic KJA 52*, WAM T 49.

-fa. of *ʿrs*[1] KJA 52*

ḫrt *ḫarata* ‘perforate, bore’, *ḫarrīt* ‘expert guide’ or see *ḫr*: ID 68 *al-Ḫarrīt*; HIn 218; Hismaic TIJ 378.

-fa. of *s*[2]*ḫ*°TIJ 378

ḫrg *ḫaraja* ‘go out’, *ḫarūj* ‘a horse that outstrips in the race’, *ḫārij* ‘departing’, *ḫaraj* ‘the quality of being two colours’: CIK 344,2 *Ḫārij*; HIn 218 Lihyn, Saf.; Hismaic TIJ 26, TIJ 90, TIJ 187, TIJ 346, WA 11472.

-fa. of *s¹nm* WA 11472

-fa. of *flw* TIJ 346

-s. of *mtʿt* TIJ 26, TIJ 90

ḫrgt See *ḫrg*: CIK 344,2 *Ḫārijah*; ID 270 etc.; WR 129; HIn 218 Saf.; Hismaic KJA 30, KJA 352, LAU 33, MuNJ 2*, Rh 5*, TIJ 32a, TIJ 69, TIJ 484, WAM T 11, WAM T 15.

-fa. of *ḥb* KJA 352

-fa. of *n--ḥ°* -fa. of *tm* Rh 5*

-s. of *ḥb* -s. of *ḫby* -fa. of *ḥb* MuNJ 2*

-s. of *y--* TIJ 32a

-s. of *yḏr* LAU 33, WAM T 11

-s. of *yḏʿ* TIJ 69

-s. of *wtr* -fa. of *ʾs¹lh* KJA 30

-s. of *whblh* -s. of *s¹ḫl* TIJ 484

ḫrʿt *ḫaraʿa* ‘cut lengthwise’, *ḫariʿ* ‘weak, flaccid’: HIn 219 Saf.; Hismaic TIJ 319*.

ḫrm *ḫarama* ‘perforate’, *ḫarm* ‘prominent part of a mountain’, *ḫārim* ‘corrupting’: CIK 349,1-2 *Ḫuraim*; cf. Cantineau 99 *ḥrmw*, *ḥrym*; PNNR 31; WR 135; HIn 219 Lihyn, Saf., Tham.C WTI 36; Hismaic KJC 765, TIJ 155, TIJ 193, TIJ 256, TIJ 395, TIJ 420, TIJ 439, TIJ 454, WAM T 4, WAM T 55.

-fa. of *ʿrb* KJC 765

-s. of *ṯkm* TIJ 193

-s. of *mʿz* TIJ 395

-fa. of *ytr* WAM T 4

ḫzb *ḫaziba* ‘be swollen’: HIn 220 Saf.; Hismaic 194.

ḫzn *ḫazana* ‘store up’, *ḫazīn* ‘stored’, *ḫuzaz* pl. *ḫizzan* ‘male hare’: cf. HB 20 *Ḫazne* fem.; HIn 220 Saf.; Hismaic TIJ 397, WAM T 3.

-s. of *ʾmr* WAM T 3

ḫl *ḫalla* ‘become scanty, perforate’, *ḫall* ‘thin’, *ḫill* ‘true friendship’, *ḫwl*, *ḫāla* ‘own servants have dependents’, *ḫyl*, *ḫāla* ‘surmise, fancy’, *ḫāl* ‘thought, opinion’, *ḫayl* ‘horses’: CIK cf. 344,1 *Ḫalīl*; CIK 346,1 *Ḫauli*; Cantineau 96 *ḥlw*; PNNR 29; Stark 88 *ḥlʾ*; HIn 225 Saf.; Hismaic JS 737, KJA 83, TIJ 268, TIJ 273, TIJ 314, WAM T 28.

-fa. of *ʾ(s)mn* WAM T 28

-fa. of *bkr* -fa. of *mqtl* TIJ 268, TIJ 273

-s. of *krt* -fa. of *ʿd* KJA 83

ḫlʾl Cmpd., see *ḫl*: HIn 225 Saf.; Tham.B Eut 283; Hismaic TIJ 489, TIJ 490 (Both Tr.N).

ḫld *ḫalada* ‘remain, last forever’, *ḫuld* ‘mole’, *ḫālid* ‘lasting’: CIK 340,1-343,2 *Ḫālid*, CIK 344,2 *Ḫallād*, CIK 348,2 *Ḫulaid*; ID 49 etc.; WR 124; Cantineau 96 *ḥldw* (masc. and fem.) ; PNNR 29; Stark 88 *ḥldʾ*; HIn 225-226 Saf.; Mixed WTI 41; Hismaic NST 1.

ḫlṣ *ḫalaṣa* ‘be clear, pure’, *ḫilṣ* ‘a man’s friend’, *ḫāliṣ* ‘clear’: Cantineau 96 *ḥlṣw*, *ḥlṣ*, *ḥlyṣw*; PNNR 30; LittNE 1 21 *ḥlyṣw*; HIn 226 Lihyn, Saf.; Hismaic TIJ 520.

-s. of *blq* TIJ 520

ḫlṣt See *ḫlṣ*: *ḫāliṣah* ‘purity: Cantineau 96 *ḥlṣt*; PNNR 30; HIn 226 Saf.; Hismaic HU 571, KJC 375, TIJ 58a, TIJ 259, TIJ 498.

-fa. of *grm* TIJ 58a, TIJ 259

-s. of *s¹w(d)* HU 571

-s. of *kms²* TIJ 498

ḫlf *ḫalafa* ‘come after’, *ḫalaf* ‘successor’, *ḫulf* ‘a breach of promise’, *ḫilāf* ‘the contrary, a well-known tree’: CIK 339,2 *Ḫalaf*, CIK 347,1 *Ḫilāf*, CIK 348,2 *Ḫulaif*; ID 79-80; WR 124; BDrN 9 *Ḫalaf*; HB 21 *Ḫleif*; Cantineau 96 *ḥlfw*, *ḥlf*, *ḥlyfw*; PNNR 29, PNNR 30; Stark 88-89 *ḥlpʾ*, *ḥlypʾ*, *ḥlypy*, *ḥlpw*; HIn 227 Lihyn, Saf.; Hismaic CTSS 1a, KJA 267, TIJ 14, TIJ 279, TIJ 356.

-s. of *blġ* TIJ 356

-fa. of *qnt* TIJ 279

ḫlflh Cmpd., see *ḫlf*: Cantineau 96 *ḫlfʾlhy*, *ḥlflhy*; PNNR 30; HIn 227 Saf. add JaS 62, JaS 132; MNM b 6.

-s. of *whbn* -fa. of *mḥrs¹* MNM b 6

ḫly *ḫal$^{a\ n}$* 'fresh, juicy herbage', *ḫlw*, *ḫalā* 'be empty'; Stark 88 *ḥlyʾ*; HIn 228 Saf.; Hismaic TIJ 347, TIJ 348.

-fa. of *ʾbnḥt* TIJ 348

-fa. of *tmlh* TIJ 347

ḫms¹ *ḫamasa* 'take a fifth', *ḫims* 'watering camels on the fifth day', *ḫāmis* 'fifth': CIK 347, 1 *Ḫims*; BDrN 9 *Ḫamīs*; HB 21; HIn 229 Saf.; Hismaic Naveh TSB C.

ḫmmt *ḫamma* 'stink (meat), weep violently, clean out, sweep', *ḫumāmah* 'sweepings', *ḫamīm* 'heavy in spirit': cf. CIK 344,1 *al-Ḫamma*, CIK 349,1 *Ḫumām*; HIn 229; Hismaic JS 614, NST 1.

ḫmy *ḫym*, *ḫāma* 'hold back through cowardice', *ḫāmiy* 'preparer of untanned skins or hides'; HIn 229; Hismaic JS 733.

ḫnn *ʾaḫann* 'having a nasal twang', *ḫunān* 'diseased nose': Cantineau 98 *ḥnynw*; PNNR 31; HIn 230 Saf.; Hismaic TIJ 450*.

-s. of *qrt* TIJ 450*

ḫwf *ḫwf*, *ḫāfa* 'fear', *ḫawwafa* 'frighten', *ḫawwāf* 'a certain black bird': Hismaic KJC 141*.

ḫyb *ḫyb*, *ḫāba* 'be disappointed', *ḫwb*, *ḫāba* 'poor needy': Cantineau 95 *ḥybw*; HIn 231 Saf.; Hismaic KJC 183.

-fa. of *s¹dn* -fa. of *tnn* KJC 183

dʾl *daʾala* 'walk in a weak manner, run with short steps', *duʾil* 'jackal, wolf, weasel', *dāla* 'come round': cf. CIK 232,1 *ad-Daul*; ID 105 *ad-Duʾil*; cf. Stark 116 *tdʾl*; HIn 232 Saf.; Hismaic TIJ 92.

-fa. of *ḏhb* -fa. of *s¹nm* TIJ 92

dʾm *daʾama* 'prop (a wall)', *dāma* 'continue, last', *dāʾim* 'continuing, lasting'; HIn 233; Hismaic TIJ 524*.

dʾyt *daʾā* ‘deceive, beguile’, *ibn daʾyah* ‘the crow’, *daʾyah* ‘the part of the bow on which the arrow lies’: HIn 233 Saf.; Hismaic TIJ 327, TIJ 337, WAM T 2b, 53.

db *dabba* ‘go leisurely, gently’, *dubb* ‘bear’; CIK 233,2 *Dubb*; ID 314; WR 157; BDrN 9 *id-Dubb*; HIn 233 Saf., Tham.B JS 32, 33; Hismaic KJC 111*, KJC 727.

-fa. of *rfd* KJC 111*

dgt See *dgg*, *dujjah* ‘intense, darkness’; Hismaic KJA 157.

dgg *dajja* ‘creep along’, *dajāj* ‘a chicken’: WR 402 *Dujaij*; HIn 235 Saf.; Hismaic KJA 297*, TIJ 161, WAM T 32.

-s. of *t̲km* -fa. of *ns¹* TIJ 161

-fa. of *ns¹ʾ* WAM T 32

dḥb Hismaic KJA 256*.

dḥt *daḥḥa* ‘conceal’, *dḥw*, *daḥā* ‘spread, extend’, *dḥy*, *daḥā* ‘drive (camels)’: cf. CIK 234,1 *Duḥaiy*; cf. ID 299 etc. *Banū Duḥaiy*, ID 48 etc. *Diḥyah*; HIn 235 Hismaic TIJ 392 (Tr.N).

dḥlt *daḥala* ‘enter recess of a tent’, *daḥl* ‘hollow, cavity’, *daḥil* ‘wicked, deceitful’, *daḥlah* ‘well’: HIn 235 Saf.; Hismaic TIJ 112, TIJ 330, TIJ 473.

-fa. of *s²k* -fa. of *gḥs²* TIJ 112

-fa. of *hrb* -fa. of *ws¹ṭ* TIJ 330

dḥml *daḥmala* ‘rouler quelque chose devant soi par terre’, *duḥāmil* ‘gros, épais, compacte’: CIK 231,1 *Daḥmal*; HB 22 *ed-Däḥmelī*; HIn 236 Lihyn, Saf.; Hismaic TIJ 74, TIJ 130.

ddʾl Cmpd., Syr. *dād* ‘friend, beloved’cf. *wddʾl*: HIn 236 Saf.; Hismaic KWM 5*.

-s. of *ʾb(s²)* KWM 5*

ddʾyl Cmpd. ?, see *dād* under *ddʾl*: Hismaic AMJ 70.

ddh See *dād* under *ddʾl*: HIn 237 Saf. (doubtful); Hismaic JS 723.

-s. of *tḫnn* JS 723

dr *darra* ‘be copious, flow abundantly’, *dāra* ‘move round, circle’, *dār* ‘house’; CIK 231,2 *ad-Dār*; HIn 238 Saf.; Tham.D JS 243; Hismaic KJA 273*, KJA 333*.

drg *daraja* ‘go on foot, creep’, *darrāj* ‘slanderer, hedgehog’, *durrāj* ‘francolin’: HIn 238 Tham.B JS 243; Hismaic KJA 101, KJA 175*, KJB 79, KJC 155, KJC 209, KJC 589, KJC 602.

-s. of *ḍḥk* KJA 101, KJA 175*

drs¹ *darasa* ‘become effaced, erased, obliterated’, *dāris* ‘effaced, worn out’: CIK 232,1 *Dāris*; BDrN 10 *Drīs*; HIn 238 Saf.; Hismaic KJA 350, KJB 56, KJB 61*, KJB 99, KJB 150, KJC 264, KJC 458, TIJ 63, TIJ 64, TIJ 72.

-s. of *ʾgys²* -fa. of *ʾgys²* TIJ 64 + TIJ 63

-s. of *s²ʾn* TIJ 72

-s. of *ḍḥk* KJC 264, KJC 458

drs¹t See *drs¹*. *dursah* ‘training, discipline’: Hismaic KJA 258, KJB 92, KJB 93.

-s. of *kr* KJB 92

-s. of *krt* KJA 258

drh *daraha* ‘repel, defend’, *dirrīh* ‘chief’, *dārih* ‘assaults of time or fortune’: HIn 239 Saf. Tham.D 691; Hismaic KJA 214.

dʿbt *daʿaba* ‘jest joke’, *duʿābah* ‘jesting, joking’: Hismaic KJC 47a.

-s. of *km* KJC 47a

dʿm *daʿama* ‘support, prop’, *daʿm* ‘strength’, *duʿmiy* ‘a horse having a whiteness in his breast’: CIK 233,2 *Duʿaim*, *Duʿām*, CIK 234,2 *Duʿmī*; ID 105 etc.; WR 157; HIn 240 Saf.; Hismaic KJA 26, KJA 154, KJB 136, KJB 158, KJC 87, TIJ 299, TIJ 413.

-s. of *ṣḥb* KJA 26, KJA 154

-s. of *ʾs¹lm* -s. of *ms¹lm* KJB 158

dql *daql* ‘weakness of the body’, *daqal* ‘kind of palm tree’, *daqal* ‘lean, emaciated sheep or goat’: cf. HB 23 *Dedzle* fem.; HIn 241; Hismaic AMJ 109, TIJ 278, TIJ 390.

-fa. of *tmlh* -fa. of *nmr* TIJ 278

-fa. of *nhm* AMJ 109

dll *dalla* ‘direct, guide’, *dall* ‘amorous gesture’, *dalīl* ‘guide’, *dallāl* ‘broker’: CIK 231,2 *Dallāl*; HB 23 *Dallāl*; HIn 242 Saf.; Hismaic AMJ 33, TIJ 30.
-s. of *ʿmrʾl* TIJ 30

dnʾlh Cmpd. *dāna* ‘obey, recompense’, Syr. *dān* ‘judge’, *danaʾa* ‘be ignoble, mean’: cf. North 1928: 241 *Dāniʾêl*; cf. Cantineau 84 *dnyʾl*; cf. PNNR 21; HIn 244 Saf. and cf. *dnʾl* (Saf., Tham.B HU 801); Hismaic TIJ 447.
-fa. of *ḥrs¹* TIJ 447

dnn *ʾadanna* ‘remain, dwell’, *dann* ‘wine jar’, *ʾadann* ‘one with a curve in the back’, *danīn* ‘buzzing’: cf. CIK 233,1 *Dinnān*; cf. HIn 244 *dnnt* Has.; Hismaic KJC 148*.

ḏʾb *ḏiʾb* ‘wolf’: CIK 235,2 *Ḏiʾāb*, *Ḏiʾb*, CIK 237,2 *Ḏuʾāb*, CIK 237,2-238,1 *Ḏuʾaib*; ID 110, ID 124, ID 178; BDrN 10 *Ḏīb* etc.; Cantineau 80 *dʾbw*, *dʾybw*; PNNR 20; LittNE 1 20 *dʾybw*; HIn 246 Saf.; Tay. W Tay 1, Tay. W Tay 5, Tay. W Tay 7a; Hismaic KJA 44, KJA 49*, KJA 55, KJA 290*, KJB 60, KJB 72, KJB 148, KJB 156, KJB 174, KJC 83*, KJC 157, KJC 219, KJC 333, KJC 441, KJC 517, KJC 561, KJC 587, KJC 650, KJC 693, KJC 756, TIJ 7.
-fa. of *ʿyḏ* KJC 333
-s. of *s¹mʿn* KJAA 290*, KJB 148, KJC 756
-s. of *qn* KJA 44, KJB 174
-s. of *ms¹kt* KJB 156
-s. of *s¹ʿd* KJA 49*

ḏrf *ḏarafa* ‘flow (tears)’, *ḏarf* ‘a certain running of horses’, *ḏarrāf* ‘quick’: HIn 252; Hismaic TIJ 189.
-s. of *ṣḫr* TIJ 189

ḏfrn *ḏafira* ‘emit a strong smell’, *ḏafir* ‘smelling strongly’: Hismaic KJB 53*, KJC 45, KJC 648.

ḏkrʾl Cmpd. *ḏakara* ‘remember’; cf. Cantineau 82 *dkrw*; PNNR 21; cf. Stark 83 *dkry*; HIn 255; Hismaic TIJ 18.

ḏky *ḏkw*, *ḏky ḏakā* ‘blaze, be sharp, acute of mind’, *ḏakāʾ* ‘sharpness, acuteness of mind’: cf. Stark 83 *dkʾ*; HIn 256 Saf.; Hismaic KJA 212*, KJC 179, KJC 315*, KJC 742.

-fa. of *wḥg* KJA 212*, KJC 315*

-s. of *ʾḏkw* -fa. of *s²mrḫ* KJC 179

-fa. of *s¹nm* KJC 742

ḏlhs Hismaic KJA 298*.

-s. of *s² ʿlh* KJA 298*

ḏmr *ḏamara* ‘urge with chiding’, *ḏimr* ‘courageous’, *ḏimār*, *ḏamār* ‘whatever one is obliged or bound to preserve’, *ḏamīr* ‘well made’: CIK 235,1 *Ḏamār*; HIn 256-257 Lihyn; Hismaic TIJ 173.

-fa. of *mʿs¹* TIJ 173

ḏhb *ḏabaha* ‘go, journey’, *ḏahab* ‘gold’: CIK 235,1 *aḏ-Ḏahhāb*; HB 24 *Ḏahab*; HIn 259, Saf.; Hismaic TIJ 92, TIJ 174.

-fa. of *s²fr* TIJ 174

-s. of *dʾl* -fa. of *s¹nm* TIJ 92

ḏhbn See *ḏhb*: CIK 235,1 *Ḏahban*, *Ḏahbān*; HIn 259 Saf.; Hismaic KJA 103*, KJA 104*, TIJ 171*.

-fa. of *ḥbbt* TIJ 171*

ḏhl *ḏahala* ‘forget, neglect’, *ḏuhl* ‘period (of the night)” CIK 238,2-239,2 *Ḏuhl*; ID 210 etc.; WR 159; HIn 259 Saf.; Tham. ? HU 195, HU 219; Hismaic JS 726.

rʾl *raʾl* ‘the young of the ostrich’: cf. CIK 485,1 *Rālān*; cf. ID 125. HIn 262 Saf.; Hismaic KJC 177, KJC 449, KJC 455.

rʾmlt Cmpd. Heb. *rāʾam* ‘rise’ or see *rm* and cf. *rmʾl*: Hismaic KJC 3.

-fa. of *rmk* KJC 3

rb *rabba* ‘be lord, master, rear, foster’, *rabb* ‘lord, possessor’, *rwb*, *rāba* ‘be thick, coagulated’, *ryb*, *rāba* ‘cause doubt, suspicion’: CIK 484,2 *Raib*; Cantineau 145 *rbw*, *rbʾ*; PNNR 59; Stark 111 *rbʾ*, *rbw*; Hin 263 Lihyn Saf.; Hismaic KJA 304*, KJC 648*.

rbbʾl Cmpd., see *rb*, *rabīb* ‘reared, fostered’: cf. CIK 486,2 *Ribbīl*; Cantineau 145 *rbybʾl* and cf. *rbʾl*; PNNR 59; cf. Stark 111 *rbʾl*; HIn 264 Saf.; Hismaic KnEG 1, TIJ 176.

-s. of *ʾmlg*

rbbt See *rb*. CIK 486,2 *Ribāba*; Stark 111 *rbbt*; HIn 264 Tham.? Eut T II 248; Hismaic JS 690.

-fa. of *t̲ʿlt* JS 690

rbt See *rb* or *rabata* ‘be closed’: HIn 265 Saf.; Hismaic KJA 264, MNM c 7 (Tr.N).

rbʿ *rabaʿa* ‘take a fourth of property’, *rabīʿ* ‘spring’: CIK 475,1-476,1 *Rabīʿ*, CIK 486,2-487,1 *Ribʿī*, CIK 489,2-490,1 *Rubaiʿ*; ID 275 etc.; WR 376, WR 384; BDrN 10 *Rabīʿ*; HB 24 *ᵉRbeijeʿ*; HIn 266 Lihyn, Saf.; Hismaic KJC 234, TIJ 465.

-s. of *ʿmʾl* TIJ 465

rbʿn See *rbʿ*: HB 24 *ᵉRbcʿān* WR 383 *Ribʿān*; HIn 267 Saf.; Hismaic KJC 226*.

rbqt *ribq*, *ribqah* ‘noose’, *ribqah* ‘a thing woven of black wool’: cf. HIn 267 *rbqn* Min.; Hismaic AMJ 131.

-s. of *ʿrk* -s. of *ʿbd* -fa. of *nʿmy* -fa. of *qnt* -fa. of *ʿlyn* AMJ 131

rtʿ *rataʿ* ‘pasture at pleasure’, *rātiʿ* ‘pasturing freely’; HIn 268; Hismaic LAU 1.

rt̲ *rat̲t̲a* ‘be worn, old’, *rat̲t̲* ‘old, worn’, *rwt̲*, *rāt̲a* ‘dung’, *ryt̲*, *rāt̲a* ‘be slow’, *rayt̲* ‘space of time’; CIK 484,2 *Rait̲*; cf. HB 26 *ᵉRweit̲e* fem.; HIn 269 Saf. add JaS 160a; Hismaic AMJ 1.

-s. of *tm* AMJ 1

rgʿ *rajaʿ* ‘return’: Cantineau 146 *rgʿʾ*; PNNR 60 *rgʿʾ*; WR 384 *Umm el-Rijāʿ*; cf. HB 25 *ᵉMrāğeʿ*; HIn 271 Saf.; Hismaic AMJ 45, AMJ 49.

-fa. of *ḥbb* -fa. of *hnlh* -fa. of *whblh* AMJ 45, AMJ 49

rgf *ragafa* ‘be in a state of motion, agitation’: Hismaic KJB 168*.

rgl *rajila* ‘go on foot’, *rajal* pl. *rijāl* ‘man’, *rijl* ‘foot’: CIK 488,1 *Rijāl*, *Rijl*; HIn 271; Hismaic JS 756; PNNR 60 *rglw*.

-fa. of *ḥds*[2] JS 756

rgm *rajm* ‘throwing or casting of stones’, *rajam* ‘stones that are placed on a grave’: HIn 271; Hismaic KJA 241*.

rḥ *rwḥ*, *raḥa* ‘be violently windy, go in the evening’, *rāḥ* ‘windy, joy’, *rūḥ* ‘soul’: Cantineau 146 *rwḥw*; PNNR 60 *rwḥw*; HIn 271-272 Hismaic TIJ 460a*.

rḫl *riḫl* ‘ewe lamb’: cf. Cantineau 146 *rḥylt* fem.; PNNR 60; HIn 274 Tham. ? JS 14 doubtful; Hismaic LAU 17*.

-s. of *bn* LAU 17*

rḫmt *raḫuma* ‘be soft or gentle’, *raḫīm* ‘soft, gentle’, *ruḫmah* ‘whiteness in the head of a ewe’, *raḫmah* ‘a vulture’; Cantineau 146 *rḥmh* ?, *rḥmy*; PNNR 60 *rḥmh*, *rḥmy*; HIn 274 Saf.; Hismaic KJC 572*.

-fa. of *bls*[1*c*]KJC 572*

rḏ ʾl Cmpd., *radda* ‘make, cause to turn back’: HIn 276 and cf. HIn 276 *rḏw ʾl* Has.; Hismaic TIJ 109.

-s. of *z*--- TIJ 109

rzk Hismaic TIJ 16*.

rs[1]*m* *rasama* ‘erase, mark’, *rasam* ‘elegance of gait’, *rasm* ‘mark’: HIn 277 Saf.; Hismaic TIJ 143.

-fa. of *ġṯ ʾl* -fa. of *mqm* TIJ 143

rs[2] *rašša* ‘sprinkle, scatter in drops’, *rašš* ‘a little rain’, *rāša* ‘feather’, *rīš* ‘feather’: cf. ID 218 *Banū al-Rā ʾiš* cf. Stark 112 *ršy*; HIn 278 Saf. WH 2403, Tham.D WTI 2; Hismaic WTI 11.

-fa. of *y ʿly* WTI 11

rs[2] *ʾt* *raša ʾa* ‘give birth (gazelle), *raša ʾ* ‘a young gazelle that is sufficiently strong to walk with its mother’; Hismaic CTSS 1a*.

-fa. of *mkr* CTSS 1a*

rṣṭ Hismaic TIJ 480a*.

-fa. of *khln* TIJ 480a*

rḍ *raḍḍa* ‘bruise, pound’, *raḍḍ* ‘bruised dates’, *rwḍ*, *rāḍa* ‘break a horse’, *rawḍ* ‘low level places where rainwater collects’ or see *rḍy* under *rḍwt*: cf.

CIK 490,1 *Ruḍā*; cf. BDrN 10 *Rāḍi*; cf. HB 25 *Rāḍī*, HB 26 *Reijiḍ*; cf. Cantineau 147 *rṣwʾ*, *rʿw*; PNNR 61 *rṣwʾ*.; cf. Stark 112 *rʿʾ* and *rwṣy*, *ryṣw*; HIn 279 Saf.; Hismaic KJB 127*

rḍwt *raḍiya*, *raḍiwa* 'be pleased, content'; Cantineau 147 *rṣwt*; PNNR 61 *rṣwt*; HIn 280 Saf.; Hismaic Tdr 9.

-s. of *qym* -s. of *nṣr* Tdr 9

rʿ *raʿʿa* 'be still', *rwʿ*, *rāʿa* 'frighten, surprise' or see *rʿy*: cf. Cantineau 147 *rʿw*; PNNR 61; HIn 281 Saf.; Hismaic AMJ 71, KJA 150b*.

-fa. of *qdm* -fa. of *ḥrs*[1] AMJ 71

rʿm *raʿūm* 'soul, lean', *riʿm* 'graisse': CIK 485,2 *ar Raʿūm* fem.; HIn 281; Hismaic WA 10682.

-s. of *ʿmrt* WA 10682

rʿy *raʿā* 'pasture', *rāʿ*[*i n*] 'shepherd': Cantineau 147 *rʿwy*; PNNR 61 *rʿwy*; CIK 484,1-2 *ar-Rāʿi*; WR 380; HIn 282 Saf., Hismaic KJC 119*, KJC 598*.

rġṯ *raġaṯa* 'suckle (her kid, goat), exhaust one's wealth through generousity', *raġūṯ* 'suckling female': Hismaic KJC 17, LAU 40.

rġḍ HIn 282 Saf.; Hismaic TIJ 169.

-s. of *ʿyḏ* TIJ 169

rfʾy *rafaʾa* 'reconcile, repair', *rifāʾ* 'close union': cf. Stark 112 *rpʾ*; HIn 283; Hismaic KJA 250, KJC 322, KJC 738, KJC 755, TIJ 266, TIJ 298.

-fa. of *mty* KJA 250, KJC 322, KJC 738, KJC 755, TIJ 266, TIJ 298

rfd *rafada* 'give a gift', *rāfid* 'giving a gift', *rifd* 'gift': CIK 483,2 *Rafd*, CIK 484,1 *Rāfid*, CIK 488,1 *Rifd*; LittNE 1 25 *rfdw*; HIn 284 Lihyn, Saf.; Hismaic KJA 235, KJC 111, KJC 156, KJC 362, KJC 408, TIJ 1, TIJ 2, TIJ 289, TIJ 382; PNNR 61 *rfdw*.

-fa. of *s*[2]*hry* TIJ 2

-fa. of *whb* TIJ 1

-s. of *ḏb* KJC 111

rqb *raqaba* 'look, watch', *raqūb* 'a woman of whom no offspring remains', *raqīb* 'looker, watcher': cf. CIK 485,1 *Raqaba*; Hismaic KJA 2*.

rkb *rakiba* 'mount': CIK 484,2-485,1 *ar-Rakb*; HIn 285 Saf.; Hismaic TIJ 18a.

-s. of *kḥm* TIJ 18a

rks¹ *rakasa* ‘turn over, upside down’, *riks* ‘uncleanness, dirt’: HIn 285 Saf. correct to WH 2837, add AKSD 2, HCH 104, HFSL 2 (doubtful), Naveh TSB B (all Tr.N); Hismaic KJA 73, KJA 264*, KJA 306, KJA 325, KJB 119, KJB 126, KJC 63, KJC 420.

rm *ramma* ‘repair, restore’, *rwm*, *rāma* ‘seek for’, Syr. *rām* ‘be high’: Cantineau 146 *rmʾ*, *rmw*, *rmy*, *rmwʾ*; PNNR 60; Stark 112 *rmʾ*, *rmw*, *rmy*; HIn 286 Lihyn, Saf.; Hismaic KJB 21*, KJC 98, KJC 411a, TIJ 40*.

rmʾl Cmpd., see *rm*: Cantineau 146 *rmʾl*; PNNR 60; HIn 286 Saf.; Hismaic LAU 8.

-fa. of *zdmnt* LAU 8

rms¹ *ramasa* ‘bury, conceal’, *rams* ‘dust, earth’: HIn 287 Saf.; Hismaic KJA 261, KJC 76, KJC 409, KJC 424, KJC 530, KJC 540, KJC 666, KJC 670, TIJ 192, TIJ 260, TIJ 300.

-fa. of *lḥ(g)* TIJ 192

-fa. of *mġṯ* TIJ 260

-s. of *mʿn* -s. of *fḍg* -fa. of *mġṯ* TIJ 300

rmʿʾt Hismaic JS 688*.

rmk *ramaka* ‘remain, stay’, *rāmik* ‘staying, black substance like pitch which is mixed with musk’: Hismaic KJC 3.

-s. of *rʾmlt* KJC 3

rmnn See *rm* ?: cf. ID 228 *Rūmmān*, ID 313 *Raimān*; cf. HIn 288 *rmn* Saf.; Hismaic AMJ 156; cf. PNNR 60 *rmnntn*.

rh *rahā* ‘part ones legs’, *rahu* ‘low-lying ground’, *ryh*, *rāha* ‘come and go’: HIn 289 Saf.; Hismaic KJA 79*, KJC 47b*, TIJ 392.

-s. of *hnʾt* -fa. of *hr* TIJ 392*

rhdt *rahada* ‘pound’, *rahīd* ‘soft, delicate’, *rahādah* ‘delicacy of life’: HIn 289 Saf. add WH 624, WH 3868; Hismaic Meek*.

rhs¹ *rahasa* ‘tread, trample’: HIn 289 Saf.; Hismaic AMJ 93, KJA 6.

-s. of *s¹by* AMJ 93

rhs¹n See *rhs¹*: Hismaic KJA 8.

zbd *zabada* ‘feed or give somone butter’, *zabd* ‘gift’, *zubd* ‘fresh butter’; CIK 598,1 *B. Zabd az-Zabd*, CIK 608,2 *Zubaid*; ID 245; WR 474; Cantineau 91 *zbdw*, *zbdʾ*, *zbdy*, *zbydw*, *zbwdw*; PNNR 25; LittNE 1 20 *zbydw* LittNE 2 233 *zbwdw*, *zbydw*; Stark 85 *zbd*, *zbdʾ*, *zbdw*; HIn 294 Saf., Tay. JS 506, JS 525, JS 547; Hismaic JS 669*, KJA 25.

-fa. of *ts¹q* KJA 25

zbʿ *az-zawbaʿah* ‘a devil, whirlwind of sand’: Hismaic KJC 711.

zḥrt *zaḥara* ‘breath with moaning’, *zaḥrah* ‘emission of breath with moaning’: cf. CIK 599,1 *Zaḥr*; cf. ID 243; Hismaic KJC 10.

zḥn *zaḥana* ‘be slow’, *zuḥn* ‘a man of short stature’: Hismaic AMJ 67, KJA 7, KJC 343.

-s. of ---- -s. of *ʿm* AMJ 67

-s. of *frs¹* KJA 7

zd See *zyd*, *zayd* ‘increase’: CIK 599,1-604,1 *Zaid*; ID 23 etc.; BDr 10 *Zêd*; HB 27; Cantineau 91 *zyd*, Cantineau 92 *zydw*; PNNR 26 also *zydʾ*; LittNE 2 234 *zydw*; HIn 296 Lihyn, Saf.; Tham.B HU 466; Hismaic TIJ 323, TIJ 337a, TIJ 489.

-fa. of *flg* -fa. of *tmʾḥwr* TIJ 323

-s. of *s²fr* TIJ 489

zdʾl Cmpd., see *zd*: CIK 604,1 *Zaidīl*; HIn 296 Saf.; Hismaic AMJ 37, AMJ 104, KJB 22, KJB 238, KJC 13, LAU 25.

-fa. of *ʾs¹rk* AMJ 37

-fa. of *bnt* AMJ 104

-fa. of *grm* -fa. of *mṭy* KJB 22

-fa. of *ʿnb* LAU 25

-s. of ʾy˚KJC 13

zdqm Cmpd., see *zd* and *zydqm*: Cantineau 92 and Cantineau 142 *zydqwmw*, *zydqwm*; PNNR 26; cf. HIn 304 *zydqwmm* Sab.; Hismaic KJA 27, KJA 53, KJA 99, KJA 187, KJA 300, KJA 304, KJB 3, KJB 88, KJB 105, KJB 110, KJB 155, KJB 173, KJB 177, KJC 107, KJC 147b, KJC 169, KJC 188, KJC 195, KJC 212, KJC 287, KJC 758, KJC 768, TIJ 409*.

-fa. of *ʾs²ṣr* KJA 53, KJB 155, KJC 287

-fa. of *ʿbd* KJA 187, KJC 768

-fa. of *ḥdmr* KJB 88

-fa. of *ḥzbr* KJC 107

-fa. of *hnʾ* KJA 27, KJA 99, KJA 300, KJB 105, KJB 173, KJB 177

-fa. of *tnn* KJC 758

-s. of *ʾʿbd* -fa. of *hnʾ* KJB 110

-fa. of *ʿbd* KJC 169, KJC 188

-s. of *tm* KJB 3

-s. of *ʿṣm* KJC 212

-s. of *rb°* -fa. of *-nʾ* KJA 304

zdlh Cmpd., see *zd*: CIK 604,1 *Zaidallah*; ID 285; Cantineau 92 *zydʾlhy*; PNNR 26; HIn 297 Lihyn, Saf.; Hismaic AMJ 72, AMJ 132, KJB 71, KJC 5, KJC 138*, KJC 144.

-s. of *hnʾlh* -fa. of *bglt* KJC 5

-fa. of *s¹mdt* AMJ 132

zdmnt Cmpd. see *zd*: CIK 604,1-2 *Zaidmanāt*; WR 470; HIn 297 Lihyn; Hismaic AMJ 75, LAU 8; PNNR 26 *zydmnwtw*.

-fa. of *grt* AMJ 75

-s. of *rmʾl* LAU 8

zdn See *zd*: Hismaic KJA 65, KJC 11, KJC 30, KJC 115, KJC 139, KJC 331, KJC 740; PNNR 26 *zydywn*.

-s. of *(ʾ)---* KJA 65

-s. of *ʾġ[nt]* KJC 331

-s. of *ʾġnt* KJC 740

zdnn See *zdn*: Hismaic KJC 135.

zr *zarra* ‘button a shirt, pierce, bite’, *zirr* ‘button’, *zāra* ‘visit’, *zawr* ‘a camel having the hump inclining’, *zūr* ‘a lie, falsehood’: CIK 606,2 *Zirr*; WR 474; HIn 297 Tham.B JS 673; Hismaic TIJ 244, TIJ 408, TIJ 457.

-fa. of *ṣmy* TIJ 457

-fa. of *hʾmy°*TIJ 408

zrt See *zr*: CIK 605,2 *B. Zāra*; ID 288 *Banū Zārah*; Hismaic KJC 173, KJC 620.

-fa. of *gml* KJC 173

-s. of *nw(y)* -fa. of *ns²l* KJC 620

zr ʿlh Cmpd., *zara ʿa* 'sow or cast seeds, cause to grow, increase', *zarʿ* 'seed-produce, offspring, children': Milik and Starcky 1975: 129 *zr ʿlhy* Nab.; Hismaic AMJ 138; PNNR 27.

-fa. of *mr* AMJ 138

zrm *zarima* 'be interrupted, ceased', *zarim* 'anything interrupted, scanty': HIn 298 Qat.; Hismaic KJA 82*.

zky *zkw*, *zakā* 'increase, augment, enjoy a plentiful life', *zakāʾ* 'increase of the earth': CIK 605,1 *Zakiyā*; Cantineau 92 *zkyw*; PNNR 26; LittNE 2 234 *zkyw*; Stark 86 *zkyʾ*; HIn 300 Saf.; Hismaic TIJ 371.

-s. of *ʾ*--- TIJ 371

zm *zamma* 'tie, fasten': cf. CIK 605,2 *Zamīma*; cf. ID 207 *Zimmān*; cf. WR 473; HIn 301 Saf.; Hismaic KJA 341.

-s. of *qn* -s. of *ms¹kt* KJA 341

zmlt *zamala* 'run as though limping, carry, follow', *zimlah* 'luxuriant palm trees', *zamīl* 'one who rides behind another', *zāmilah* 'animal used for carrying goods': cf. CIK 605,1-2 *Zāmil*; CIK 606,1 *Ziml*; CIK 611,2 *Zumail*; cf. WR 473; HIn 301 *zml* Saf.; Hismaic AMJ 143.

zn *zanna* 'dry up (sinews), suspect', *zyn*, *zāna* 'adorn, decorate', *zayn* 'grace, beauty': HIn 302 Saf.; Tham.B HU 336 (doubtful); Hismaic MNM a 3.

-s. of *b°ʿdn* -s. of *s¹ ʿd* MNM a 3

znd *zanada* 'produce fire, thirst', *zand* 'piece of stick for producing fire': HIn 302 Saf.; Hismaic KJA 310.

-fa. of *tm* KJA 310

zhr *zahara* 'shine, glisten (a star)', *zahr* 'blossom', *zāhir* 'shining'; CIK 598,2-599,1 *Zāhir*, *Zahr*, CIK 609,2-611,1 *Zuhair*, CIK 611,2 *Zuhr*; ID 75 etc.; WR 465; HIn 302 Saf.; Hismaic AMJ 63.

zhmn *zahima* ‘stink’, *zuhm* ‘fat’, *zahmān* ‘satiated’: HIn 303 Saf.; Hismaic KJA 138, KJB 68, KJB 358.

-s. of *yḫld* -fa. of *wḍʾ* KJA 138

zhwd Hismaic AMJ 10*.

-s. of *lḥd* AMJ 10*

zhy *zhw*, *zahā* ‘increase (plant), blossom, behave proudly’ *zahu* ‘pride’, *zahāʾ* ‘a plant bright and beautiful’, *zuhāʾ* ‘number or amount’: Hismaic KJA 34, KJA 322*, TIJ 4, TIJ 48, TIJ 342.

-fa. of *ġṯ* KJA 34

-s. of *ʿmr* TIJ 4, TIJ 48

zyd See *zd*, *zāda* ‘increase, augment’: CIK 606,2-608,1 *Ziyād*; ID 201 etc.; BDrN 10 *Zāyid* etc.; HB 28; HIn 304 Saf.; Mixed HU 262 (Tr.N), Hismaic TIJ 222.

-s. of *fṣy* TIJ 222

zydt See *zyd*, *ziyādah* ‘increase’: HIn 304 Min; CIK 608,1-2 *Ziyāda*; Kahaleh 1979, 4: 230 *Ziyādāt* (Tr.N); AMJ 152, KJA 36 (Tr.N).

-s. of *ʾḫwr* AMJ 152

zydqm Cmpd., see *zyd* and *zdqm*: Hismaic SIAM 44.

s¹ʾb *saʾaba* ‘throttle’, *syb*, *sāba* ‘run’, *sāʾib* ‘running water’; CIK 499,1-2 *Sāʾib*; ID 77; WR 398; HIn 307 Saf.; Hismaic KJA 127*.

s¹ʾr *saʾara* ‘remain’ or see *s¹yr*; HIn 307 Saf.; Hismaic KJB 45*, KJB 163, LAU 34.

-s. of *rm-* KJB 45*

-s. of *yqm* LAU 34

s¹by *sby*, *sabā* ‘capture’, *sabiy* ‘captive’: HIn 310 Saf.; Hismaic AMJ 93; PNNR 61 *šby*.

-fa. of *rhs¹* AMJ 93

s¹gḥt *sajiḥa* ‘be even, soft’, *sajaḥ* ‘beauty, justness of proportion’, *sajīḥah* ‘natural disposition’: cf. CIK 498,1 *Sajāḥ*; ID 137; HIn 310 *s¹gḥ* Saf.; Hismaic TIJ 508*.

s¹ḥr *saḥara* ‘enchant, fascinate’, *saḥar* ‘a little before daybreak’, *sāḥir* ‘an enchanter’: HIn 311 Saf.; Stark 113 *šhrʾ*; Hismaic TIJ 365*; PNNR 63 *šḥrw*.

-fa. of *qnfʿ* TIJ 365*

s¹ḥm *saḥima* ‘be black’, *saḥam* ‘a sort of tree’, *suḥum* ‘blacksmith’s hammers’, *saḥam* ‘blackness’: CIK 516,1-2 *Suḥaim*; ID 22 etc.; WR 426; cf. HB 28 *Siḥme*; HIn 312; Hismaic TIJ 35*.

-s. of *gḥ-* TIJ 35*

s¹ḫr *saḫira* ‘mock’: HIn 312 Saf., Tham.B JS 354; Hismaic KJA 316, KJB 43*, TIJ 67.

-s. of *ḥmdt̊* KJB 43*

-s. of *ṣ ʿdt* TIJ 67

s¹ḫl *saḫala* ‘drive away, repel’, *saḫl* ‘an infant that is the object of love to his parents’, *saḫlah* pl. *saḫal* ‘lamb’, *suḫḫal* ‘weak, vile’: cf. CIK 499,1 *Saḫla*; HIn 313; Hismaic AMJ 43, TIJ 345, TIJ 364, TIJ 394a, TIJ 484.

-fa. of *ṣtm* TIJ 364

-fa. of *whblh* -fa. of *ḫrgt* TIJ 484

-fa. of *ʿbd* AMJ 43

s¹d *sadda* ‘close, do what was right’, *swd*, *sāda* ‘rule’, *sūd* ‘authority’, *sawd* ‘narrow black strip of ground at the foot of a mountain’, *sīd* ‘wolf’: CIK 512,1 *as-Sīd*, CIK 515,1 *Sūd*; ID 284, ID 143 *ʾAbu Saud*; Cantineau 149 *šwdw*, *šwd*, *šwdy*, *šwdyw*; PNNR 62, PNNR 63; LittNE 1 25 *šwdw*; cf. BDrN 12 *Sūdī*; HB 31 *Sūde*, fem.; HIn 313 Saf.; Hismaic KJB 1, KJB 577.

s¹dl *sadala* ‘let down, lower’, *sudl* ‘veil, curtain’; *sidl* ‘string of gems’: HIn 314 Saf.; Hismaic KJC 297*.

-s. of *ytr°* KJC 297*

s¹dn See *s¹d*, *sīdān* ‘wolves’: CIK 512,1 *Sīdan*; ID 148; WR 421; cf. HB 28 *Seddênā* fem.; HIn 314 Saf.; Hismaic KJA 198, KJC 126, KJC 183, KJC 671.

-fa. of *ʾmn* KJA 198

-s. of *ḫyb* -fa. of *tnn* KJC 183

-s. of *nḫy* -fa. of *ʾmn* KJC 126

s¹r See *s¹rr*, *sirr* ‘a secret’, *swr*, *sāra* ‘leap, spring towards’, *sūr* ‘wall of a city’ or see *s¹yr*: CIK 502,2 *Sair*, CIK 519,1 *Sūr*; ID 293; HIn 314-315 Saf.; Hismaic AMJ 119, AMJ 144, KJB 133.

-fa. of *ʾs¹wr* AMJ 119

-fa. of *mqmʾl* KJB 133

s¹rr *sarra* ‘rejoice, gladden’, *surūr* ‘happiness’, *sirr* ‘secret’: cf. CIK 511,2 *Sarran*, CIK 514,1 *as-Sirrī*, CIK 519,1 *Surair*; WR 432; BDrN 11 *Srūr*; HB 28; HIn 315 Saf.; Hismaic KJB 52, TIJ 358, WAM T 45.

-s. of *ṣbḥ* TIJ 358

s¹rq *saraqa* ‘steal’, *sāriq* ‘thief’, *sariq* ‘theft’: Cantineau 154 *ʾlšrqyw*; cf. PNNR 67 *(ʾl)-šrqyw*; CIK 511,2 *Sarrāq*; HIn 316 Saf.; Hismaic JS 689, KJA 84a, TIJ 18e.

-s. of *ḥrs¹* TIJ 18e

s¹rqt See *s¹rq*, *sariqah* ‘a thing stolen’: CIK 519,1-2 *Surāqa*; ID 282 etc.; HIN 316 Saf.; Hismaic AMJ 86, KJB 161, KJB 281*, KJB 302.

-s. of *ʾlwḏ* KJC 281*

s¹rm HIn 316 Qat.; Hismaic TIJ 198*.

-s. of *grm* -s. of *s¹ʿd* TIJ 198*

s¹rw *saruwa* ‘be generous’; HIn 316 Saf.; Tham. ? WA 12430 (doubtful); Hismaic KJA 138*.

-s. of *ẓnn* -fa. of *ʿkl* KJA 138*

s¹ry *sarā* ‘journey, travel by night’, *sarrāʾ* ‘one who journeys much or often by night’, *srw*, *sariy* ‘noble, high minded’; CIK 511,1 *Sarī*, CIK 519,1 *Suraiy*; ID 43 *as-Sariy*; WR 432; BDrN 11 *Sārī* etc.; HB 29 *Sārī*; HIn 317 Saf.; Hismaic KJB 33*, KJB 100.

-s. of *qn* KJB 33*

-s. of *(k)nn* -fa. of *ʿkl* KJB 110

s¹ʿd *saʿida* ‘be prosperous’, *saʿd* ‘good luck’; CIK 492,1-497,2 *Saʿd*, CIK 499,2-501,2 *Saʿīd*, CIK 511,2 *Saʿūd*, CIK 514,1 *Suʿād*, *Suʿaid*; ID 35-36

etc.; BDrN 11 *Saʿd* etc.; HB 29; Cantineau 152 *šʿdw*, *šʿdy*, *šʿdʾ*, *šʿwdw*, Cantineau 153 *šʿwdy*, *šʿydw*; PNNR 65, PNNR 66; Stark 115 *šʿd*, *šʿdʾ*, *šʿdw*, *šʿdy*, *šʿw[d]ʾ*; HIn 318 Saf., Tham.B ? JS 418, Tham.D JS 203-4; Hismaic AMJ 69, AMJ 135, KJA 12, KJA 49, KJA 51, KJA 155, KJA 281, KJA 287, KJB 74, KJB 112, KJB 114, KJB 115, KJB 134, KJB 145, KJB 175, KJC 96, KJC 154, KJC 159, KJC 187, KJC 220, KJC 275, KJC 385, KJC 404, KJC 488, KJC 504, KJC 521, KJC 665, MNM a 3, MuNJ 1, TIJ 89, TIJ 198, TIJ 211, TIJ 217, TIJ 434, TIJ 462, TIJ 467, TIJ 492.

-fa. of *bʿdn* -fa. of *zn* MNM a 3

-fa. of *grm* -fa. of *(s¹)rm* TIJ 198

-fa. of *ḥryʿ*KJC 385

-fa. of *s¹nt* -fa. of *hnʾt* TIJ 211

-fa. of *ʿbdʾyb* KJA 168, MuNJ 1

-fa. of *ʿn* TIJ 462, TIJ 467

-fa. of *fḫtn* KJB 112

-fa. of *qymt* KJB 115, KJC 665

-fa. of *ms¹kt* KJA 49

-s. of *tmlḥwr* -s. of *ʾys¹* TIJ 434

-s. of *ḥdd* -fa. of *ʾs¹* TIJ 492

-s. of *zk-* -fa. of *kʿm* AMJ 69

-s. of *mʿn* KJC 187

-s. of *ngʾ* KJB 175

-s. of *ngm* -fa. of *s²kmlh* AMJ 135

-s. of *wh--* -fa. of *whb[]lh* TIJ 217

s¹ʿdʾl Cmpd., see *s¹ʿd*: Stark 115 *šʿdʾl*. HIn 318 Saf.; Hismaic CTSS 1a, KJC 711*, LAU 29, MNM a 2, TIJ 218, TIJ 267, TIJ 320, TIJ 448, TIJ 477.

-fa. of *šmt* TIJ 267, TIJ 448

-fa. of *whblh* -fa. of *s¹ʿdʾl* MNM a 2

-s. of *ʾdbʾl* TIJ 477

-s. of *mtʿt* TIJ 218, TIJ 320

-s. of *whblh* -s. of *s¹ʿdʾl* MNM a 2

s¹ ʿdt See *s¹ ʿd*: CIK 501,2 *Sa ʿīda*, 501,2-502,1 *Sā ʿida*; ID 32; WR 403; HB 29 *Sy ʿde* fem.; Cantineau 152 *š ʿdh*, *š ʿdt*; PNNR 66; HIn 318 Saf., Tham.B HU 358, TIJ 512; Hismaic KJC 202, KJC 293, TIJ 47, TIJ 129.

-fa. of *ʾs¹d* TIJ 129

-fa. of *ḥg* KJC 202, KJC 293

-fa. of *mlk* TIJ 47

s¹ ʿdl Cmpd., see *s¹ ʿd*: HIn 319 Saf., Tham.B HU 658; Hismaic JS 729.

s¹ ʿdlh Cmpd., see *s¹ ʿd*: CIK 497,2-498,1 *Sa ʿdallah*; Cantineau 153 *š ʿdʾlhy*, *š ʿdlhy*, *š ʿdʾlh, s ʿdʾlhy*; PNNR 65, PNNR 66; HIn 319 Lihyn, Saf.; Hismaic JS 35*, JS 229, KJA 148*, KJB 179, KWM 1, LAU 41, MNM a 4, TIJ 78, TIJ 369, TIJ 491, TIJ 515, WAM T 31.

-fa. of *[----]* -fa. of *whb* MNM a 4

-fa. of *ʾs¹* JS 229

-fa. of *ʿyḏ* TIJ 369

-fa. of *hr* TIJ 491

-fa. of *wʾl* KJB 179

-fa. of *w ʿr* TIJ 515

-s. of *ʾtmt* WAM T 31

-s. of *b(r)d* JS 35*

-s. of *tm* LAU 41

-s. of *km* KWM 1

-s. of *whblh* TIJ 78

-s. of *yf ʿ* -s. of *whb* MNM a 4

s¹ ʿdn See *s¹ ʿd*: cf. CIK 498,1 *Sa ʿdāna*; ID 15 *as-Sa ʿdān*; HIn 320 Saf.; Hismaic AMJ 116*, RTI B.

-s. of *ngʾt* AMJ 116*

s¹ ʿr *sa ʿara* ‘light, kindle (fire)’, *su ʿira* ‘be mad, insane’, *su ʿr* ‘madness’, *si ʿr* ‘price’: CIK 514,1 *Si ʿr*, ID 328; HIn 320 Saf.; Hismaic KJC 656*.

s¹ ʿmn *sa ʿama* ‘walk quickly’: Hismaic KJC 153.

s¹fn *saffa* ‘weave’, *safana* ‘strip of its outer covering’, *safan* ‘an axe’, *safā* ‘be quick’, *safiy* ‘dust made to rise and carried by the wind’: cf. CIK 515,1-

516 *Sufyān*; cf. ID 45 etc; cf. HB 29 *Syfjān*; HIn 322 Saf.; Hismaic KJA 173.

s¹krn *sakira* ‘become intoxicated’, *sakrān* ‘intoxicated’; Cantineau 150 *škrw*; PNNR 63 *škrw*; CIK 503,2 *as-Sakrān*; BDrN 12 *Sakrān*; HB 29 *es-Säkrān*; HIn 323 Saf.; Mixed WTI 78; Hismaic AMJ 130.

-s. of *mbʿl* AMJ 130

s¹kn *sakana* ‘be still, inhabit, dwell’, *sakn* ‘inhabitant’, *sākin* ‘still’, *sakan* ‘cause of comfort’; cf. Cantineau 150 *škynt*; cf. PNNR 63 *škynt*; CIK 503,1-2 *Sakn*, *as-Sakūn*, CIK 516,2 *Sukain*; ID 221, ID 315 etc.; WR 403; cf. Stark 114 *škny* (doubtful); HIn 323 Saf.; Hismaic AMJ 100*.

s¹l See *s¹ll* under *ʾs¹ll*: cf. Cantineau 123 *sly*, *slyw*, Cantineau 150 *šly*, *šlʾ*; PNNR 45, PNNR 64; Stark 114 *šlʾ*; HIn 324 Saf.; Hismaic KJC 59, KJC 652*.

s¹lṭ *saluṭa* ‘overcome’, *salīṭ* ‘strong, hard’: CIK 508,1-2 *Salīṭ*; ID 69; Hismaic KJA 284; PNNR 65 *šltw*.

s¹lm *salima* ‘be safe, secure’: CIK 503,2 *Salām*, CIK 507,2-508,1 *Sālim*, CIK 508,2 *Sallām*, *Salm*, CIK 517,1-2 *Sulaim*; ID 108 etc. BDrN 12 *Sālim* etc.; HB 30; Cantineau 151 *šlmw*, *šlm*; Stark 114 *šlwm*, *šlm* ?, *šlmʾ* ?, *šlmw*, *šlmy*; HIn 325 Lihyn, Saf.; Tham.C HU 58, HU 484, Tham.D HU 744; Hismaic AMJ 136, AMJ 140, JS 712, KJA 76, KJA 88, KJA 320*, KJB 42, KJB 82, KJB 100, KJC 290, KJC 295, KJC 430, KJC 438, KJC 675, KJC 712*, KJC 749, LAU 38, TIJ 41, TIJ 126, TIJ 159, TIJ 228, TIJ 433, UR 1, WAM T 17; PNNR 64.

-fa. of *ʾmrt* KJC 438

-fa. of *tm* TIJ 228

-fa. of *ḥgg* WAM T 17

-fa. of *s¹lm* LAU 38

-fa. of *s¹yr* KJA 76, KJA 320*, KJB 82, KJB 100, KJC 290

-fa. of *ʿbd* TIJ 433

-fa. of *ġḍbt* UR 1

-s. of *s¹lm* LAU 38

-s. of *ẓ ʿnt* KJA 88, KJC 295, KJC 749

-s. of *ft* -fa. of *s¹yr* KJC 675

-s. of *nhq* AMJ 140

s¹lmʾl Cmpd., see *s¹lm*: HIn 325 Saf.; Hismaic KJC 499.

s¹lmt See *s¹lm*. CIK 503,2-506,1 *Salama*, CIK 506,1-2 *Salāma*, CIK 517,2 *Sulaima*; ID 110 etc.; HB 30 *Sälāme*; Cantineau 151 *šlmt*, *šlymt* fem.; PNNR 64; HIn 326 Lihyn, Saf.; Hismaic AMJ 90, JS 655, JS 656, JS 658.

-s. of *šbd* JS 655

-s. of *š(m)d* JS 658

-s. of *ʿmrʾl* AMJ 90

s¹m *samma* 'poison', *samm* 'object, aim', *sāma* 'pasture freely (camels etc.)', *sawm* 'the going away to find or get something, the price of something'; CIK 511,2 *Saum*; Cantineau 151 *šmw*; PNNR 65; HIn 327 Lihyn, Saf.; Hismaic KJA 97, KJB 13, KJB 137, KJC 662, WAM T 37.

-s. of *ʿhl* KJA 97

-fa. of *ʿbd* WAM T 37

-fa. of *ʿlfn* KJB 137

s¹mdt *samada* 'be high, elevated', *samīd* 'white, whitened flour', *sāmid* 'a man standing, raising his head': Hismaic AMJ 53, AMJ 132.

-fa. of *ʾmn* AMJ 53

-s. of *zdlh* -s. of *hnʾlh* AMJ 132

s¹mʿn *samiʿa* 'hear', *sāmiʿ*, *samīʿ* 'hearing or listening': CIK 510,1 *Samʿān*, 513,1 *Simʿān*; BDrN 12 *Samʿān*; HB 30 *Smäʿīn*; Cantineau 151 *šmʿwn*; PNNR 65; Stark 115 *šmʿwn*; HIn 329 Sab.; Hismaic KJA 44, KJA 49, KJA 192*, KJA 290*, KJB 107, KJB 148, KJB 156, KJB 174, KJC 351*, KJC 353, KJC 539, KJC 756, TIJ 270.

-fa. of *ḏʾb* KJA 290*, KJB 148, KJB 756

-fa. of *hd* KJC 539

-s. of *qn* -fa. of *ḏʾb* KJA 44, KJB 174

-fa. of *šbrmt* KJB 107, TIJ 270

-s. of *ms¹kt* -fa. of *ḏʾb* KJB 156

-s. of *s¹ʿd* KJA 49

s¹mn See *s¹m*, *samina* ‘be fat’, *samn* ‘clarified butter’, *samīn* ‘fat, plump’: CIK 510,2 *as-Samīn,* CIK 513,1 *Simmān*; ID 210 *Banu al-Samīn*; WR 412; HIn 330 Tham.B HU 204 (doubtful), Saf.; Hismaic AMJ 128*, KJA 106; PNNR 45 *smwn*.

-fa. of *nṣt* AMJ 128*

s¹mnn See *s¹mn*; Hismaic KJC 626.

-fa. of *bny* KJC 626

s¹my *samā* ‘be high, rise’, *samāʾ* ‘highest part, sky’, *sāmⁱⁿ* ‘high, lofty’: CIK 518,2-519,1 *Sumaiy*; ID 154; HIn 331; Tham.C JS 13; Hismaic NST 1.

s¹nt See *s¹nn*: *sunnah* ‘way, course’, *sinnah* ‘ploughshare’, *sanit* ‘barren’, *sanīt* ‘year of drought’: CIK 510,2 *Sana*, CIK 511,1 *Sanna*; HIn 332 Saf.; Hismaic TIJ 211, TIJ 350.

-fa. of *hnʾt* TIJ 350

-s. of *s¹ʿd* -fa. of *hnʾt* TIJ 211

s¹nr *sanira* ‘cross, perverse’, *sunnar*, *sunār* ‘cat’; Hismaic KJA 80.

s¹nm *sanām* ‘hump of a camel’: CIK 510,2 *Sanām*, 519,1 *as-Sunaim* ?; WR 412; HIn 332 Saf.; Hismaic KJB 39, KJC 136, KJC 742, TIJ 92, TIJ 151, TIJ 357, WA 11472.

-fa. of *hrẖ* TIJ 357

-s. of *ḫrg* WA 11472

-s. of *ḏky* -s. of *ʾḏkw* KJC 742

-s. of *ḏhb* -s. of *dʾl* TIJ 92

s¹nn *sanna* ‘bite, sharpen’, *sanan* ‘way or road’, *sinān* ‘spear-head’: CIK 513,1-514,1 *Sinān*; WR 422; HIn 332 Saf.; Hismaic KJC 697; PNNR 65 *šnnw*.

s¹ny *sanā* ‘water, irrigate, shine (of lightening)’, *saniy* ‘high, exalted’, *sanāʾ* ‘high, exalted tank, position’: cf. CIK 519,1 *Sunaiya*; HIn 333 Saf.; Hismaic KJB 135, KJC 389, KJC 443, KJC 718*, KJC 722, WAM T 33; PNNR 65 *šnʾ*.

-fa. of *khl* KJB 135, KJC 389, KJC 718*, KJC 722

-s. of *gtt* -s. of *hml* -fa. of *khl* KJC 443

s¹hr *sahira* ‘wake, be sleepless’, *sāhir* ‘waking, sitting up’: Cantineau 149 *šhrw*; PNNR 62 *šhrw*; HIn 333 Saf.; Hismaic KJC 606.

s¹hrt See *s¹hr*: CIK 498,2 *Sāhira*; ID 41-42; HIn 333 Saf.; Hismaic TIJ 91*, TIJ 269, TIJ 331, TIJ 341, TIJ 377.

-s. of *bhs²* TIJ 91*

-s. of *šmt* TIJ 331

-s. of *tʿ--* TIJ 269

s¹hm *sahama* ‘be altered in colour, emaciated’, *sahm* ‘arrow’: CIK 498,2-499,2 *Sahm*; ID 74 etc.; WR 398; Stark 113 *šh(y)mw*; HIn 334 Saf.; Hismaic KJA 126*, TIJ 495.

-s. of *rṭ̣ᵉ--* TIJ 495

s¹hnlh Hismaic KJB 44*.

-fa. of *-hʾ* KJB 44*

s¹yḥ *sāḥa* ‘run on the surface (water)’, *sayḥ* ‘running water’; *sāʾiḥ* ‘going or journeying’: Hismaic AMJ 155.

s¹yr *sāra* ‘go or pass along’, *sayr* ‘going in any manner or any pace’, *sayyār* ‘journeyer, traveller’; CIK 502,2 *Saiyār*; ID 73; WR 403; BDrN 12 *Sāyir* etc.; HB 31; HIn 336; Hismaic KJA 70*, KJA 75, KJA 76, KJA 113, KJA 239, KJA 291, KJA 292, KJA 320*, KJA 337, KJB 17, KJB 34*, KJB 35, KJB 37, KJB 82, KJB 90, KJB 100, KJB 181*, KJC 94, KJC 290, KJC 314, KJC 357, KJC 359*, KJC 378, KJC 433, KJC 518*, KJC 675, KJC 676a*, KJC 685, KJC 724, KJC 735, KJC 743, KJC 747, TIJ 179.

-fa. of *ʾʿbdt* KJB 17, KJB 90

-fa. of *ʿbd* KJA 113, KJA 337, KJC 378, KJC 685, KJC 735, TIJ 179

-fa. of *ʿṯft* KJC 433

-s. of *s¹lm* KJA 76, KJB 100

-fa. of *ʿbd* KJA 320*, KJA 337, KJB 82, KJC 290

-s. of *ft* KJC 675

s²ʾn *šaʾn* ‘a thing, affair or business’, *šyn*, *šāna* ‘to disgrace, dishonour’: HIn 337; Hismaic TIJ 72*, TIJ 387.

-fa. of *drs¹* TIJ 72*

s²ʾwt *ša ʾā* ‘overtake’, *ša ʾw* ‘aim, limit’: cf. HIn 337 *s²ʾw* Saf.; Hismaic KJC 339*.

s²b *šabba* ‘become a young man’, *šābb* ‘young man’, *šwb* ‘to mix, act treacherously’, *šyb*, *šāba* ‘become white-haired, hoary’, *šayb* ‘whiteness of hair’: cf. CIK 521,1 *Šabāb*, CIK 522,1-2 *Šabīb*, CIK 524,1 *Šaibān*; cf. ID 176, ID 283 etc.; Cantineau 148 *šbw*, Cantineau 149 *šybw*; PNNR 63 *šybw*; Stark 113 *šbʾ*, Stark 114 *šyby*; cf. HB 31 *Šebīb* etc.; HIn 337 Saf.; Hismaic KJA 150a*, KJA 268, TIJ 31, WAM T 24.
-fa. of *ḫb* KJA 150a*
-fa. of *hnʾ* TIJ 31

s²bt See *s²b*. *šabbah* ‘burning’, *šaybah* ‘white beard’, *šibit* ‘dill’; CIK 522,1 *Šabba*, CIK 523,2 *Šaiba*; ID 300 etc.; cf. Cantineau 148 *šbty*; PNNR 62; cf. Stark 113 *šbty*; HIn 337 Saf., Tham.D JS 203; Hismaic KJB 19.
-s. of *wtr* KJB 19

s²bṯ *šabat* ‘spider’; CIK 521,2 *Šabaṯ*; ID 137; Cantineau 148 *šbytw*; PNNR 61; cf. HB 31 *Šbeiṯe*; Hismaic TIJ 197, TIJ 401.
-s. of *khl* TIJ 401
-s. of *khln* TIJ 197

s²bd Hismaic JS 655*.
-fa. of *s¹lmt* JS 655*

s²br *šibr* ‘span’, *šabar* ‘gift and wealth’; CIK 521,2 *Šabar*, CIK 529,1 *Šibr*; HB 31 *Šbār*; cf. Cantineau 148 *šbrh*; PNNR 62; HIn 338 Saf., Tay. JS 518; Hismaic KJA 150*, LAU 5*.
-s. of *yb* -s. of *ns²r* KJA 150*

s²brmt *šubrum* ‘espèce de plante’, *šabramah* ‘chatte, chat femelle’; CIK 531,1 *Šubruma*; ID 329; WR 24; LittNE 1 25 *šbrmt*; Hismaic KJB 107, KJC 554, TIJ 270; PNNR 62.
-s. of *s¹m ʿn* -s. of *qn* KJB 107, TIJ 270

s²bm *šabima* ‘be cold (water), *šabim* ‘cold’, *šabām* ‘a certain plant’, *šibām* ‘a piece of wood used to stop a kid or lamb from suckling its mother’: CIK 529,1 *Šibām*; ID 251; HIn 339 Saf.; Hismaic SIAM 39a*.

s²by See *šb*, *šby*, *šabā* ‘be high, elevated or lofty’; HIn 340 Saf.; Hismaic KJC 395; PNNR 61 *šby*.

-fa. of *ġlb* KJC 395

s²ṯ ʿ Hismaic TIJ 22.

-s. of *ṣ̌kt* TIJ 22

s²gr *šajara* ‘thrust with a spear’, *šajar* ‘trees, bushes’, *šijār* ‘the wood of a well by means of which a bucket is drawn out’: CIK 529,2 *Šijār*; ID 220 *aš-Šajjar*; Cantineau 148 *šgryʾ* (possibly) ; PNNR 62 *šgdyʾ* ?; Stark 113 *šgrʾ*; Hismaic TIJ 325.

-s. of *w ʿl* TIJ 325

s²g ʿ *šaju ʿa* ‘be couragrous’, *šujā ʿ*, *šijā ʿ* ‘courageous, brave’: CIK 529,2 *Šij ʿ*, CIK 531,1-2 *Šujā ʿ*; ID 24; WR 419; HB *Šiǧā ʿ*; Cantineau 149 *šg ʿw*; PNNR 62; Stark 113 *šg ʿw*; HIn 341 Saf.; Hismaic JS 247, KJB 94.

-s. of *qs¹s¹* JS 247

s²gy *šajiya* ‘be choked, grieve, be sorrowful’, *šajⁱⁿ* ‘grieving’: Cantineau 149 *šgyʾ*; PNNR 62; Hismaic AMJ 64.

s²ḥ See *s²ḥḥ* or *s²yḥ*, *šāḥa* ‘be cautious or in fear’, *šīḥ* ‘cautious, fearing, artemisia’: HIn 341 Saf.; Hismaic TIJ 378*.

-s. of *ḫrt* TIJ 378*

s²ḥḥ *šaḥḥa* ‘be niggardly, tenacious’, *šaḥīḥ* ‘niggardly, tenacious’: Hismaic KJC 125.

-s. of *ʿbd* KJC 125

s²ḥdd *šuḥdūd* ‘ill-natured, the lion’: HIn 341 Saf.; Hismaic AMJ 8.

s²d *šadda* ‘charge, make hard, bind’, *šyd*, *šāda* ‘plaster’ cf. CIK 522,2-523,1 *Šaddād*, CIK 531,1 *Šudaid*; cf.ID 71, ID 240, ID 254; cf. BDrN 12 *Šdīd*; cf. HB 31 *šedde*; cf. Cantineau 149 *šwdw*, *šwd*, *šwdy*, *šwdyw* ? ; PNNR 62, PNNR 63; cf. Stark 113 *šddʾ*, *šdy*; HIn 343 Saf.; Hismaic AMJ 139.

-fa. of *fgt* AMJ 139

s²r *šarra* ‘be evil’, *šarr* ‘evil’, *šurr* ‘vice, fault’; *šwr*, *šāra* ‘exhibit, display something, gather honey’, *šawr* ‘gathered honey’; cf. CIK 528,1 *Sarīra*, *Šār*; ID 211 *Šaur*; cf. HB 32 *Šerār*; HIn 344 Saf.; Hismaic KJA 248.

s²rṣ *šaraṣa* ‘commencer à marcher’, *šarṣ* ‘roughness, hardness’: HIn 346 Saf., Tay. W Tay 4; Hismaic KJB 29*.

s²s²r Hismaic TIJ 517*.

-fa. of *ʿm* TIJ 517*

s²ṣr *šaṣara* ‘sew a garment with stitches widely spaced’, *šaṣar* ‘young gazelle’; HIn 348 Saf.; Hismaic KJA 242, KJB 58, KJB 59, KJC 654, TIJ 82, TIJ 199 + TIJ 201, TIJ 238, TIJ 290, TIJ 452, TIJ 463.

-fa. of *ḥrzt* TIJ 82, TIJ 290

-s. of *ʾḫy* KJB 58

-s. of *ḥr* -fa. of *ḥrb* TIJ 238

-s. of *mʿnlh* -fa. of *mʿnlh* -fa. of *mʿhn* TIJ 199 + TIJ 201

-s. of *wrb* -fa. of *ḥrzt* TIJ 452

-s. of *mty* -fa. of *ḥrzt* TIJ 463

s²ʿṯʿ Cmpd., *s²ʿ* + *yṯʿ*, cf. *s²ʿlh*; cf. Cantineau 105 *tymytʿw*; cf. PNNR 68 *tymytʿw*; cf. Lihyn HE 23 *tmṯʿ*; Hismaic KJC 552.

s²ʿlh *šyʿ*, *sāʿa* ‘become spread, widely known’, *šayʿ* ‘follower, friend, companion’: cf. CIK 523,2 *Šaiʿallāt*, CIK 525,1 *Šaʿl*; Cantineau 150 *šyʿʾlhy*; PNNR 63 *šyʿʾlhy*; cf. HIn 351 *s²ʿlt* Lihyn, Saf., Tham ? JS 657 possibly; Hismaic AMJ 113, KJA 298, Naveh TSB C, WAM T 12.

-fa. of *ḏhls* KJA 298

-s. of *ṣhbt* WAM T 12

s²ʿn *ʾašʿana* ‘catch by the hair’, *šaʿan* ‘scattered bits of dried plants’, or from *šyʿ*, see under *s²ʿlh*: Stark 114 *šyʿn*; Hismaic KJC 690*.

-fa. of *ftyt* KJC 690*

s²fr *šafira* ‘decrease, diminish’, *šufr* ‘the place of the growth of the eyelash’; HIn 352 Saf.; Hismaic TIJ 174, TIJ 190, TIJ 284, TIJ 489, TIJ 490.

-fa. of *ḥr* TIJ 284

-fa. of *zd* TIJ 489

-fa. of *wʾlt* TIJ 490

-s. of *tmʿbdt* -fa. of *tmʿbdt* -fa. of *whblh* TIJ 190

-s. of *ḏhb* TIJ 174

s²fl *šafal* ‘gizzard’; HIn 352 Saf.; Hismaic JS 665*.

s²k *šakka* ‘doubt, be uncertain’, *šakk* ‘doubt’, *šawk* ‘thorn’; CIK 524,2 *Šakk*, 529,1 *Šauk*; HIn 353 saf.; Hismaic TIJ 112.

-s. of *dḥlt* -fa. of *gḥs²* TIJ 112

s²kt See *šk*. Cantineau 149 *šykt*; PNNR 63 *šykt*; HIn 353 Saf., Tham.D WHI 1; Hismaic Rh 11, TIJ 128.

-fa. of *gḥs²* TIJ 128

-fa. of *ʿ(f)ry* Rh 11

s²kr *šakara* ‘thank’, *šukr* ‘thanks’, *šakīr* ‘fresh grass growing beneath old, tough herbage’; CIK 524,2 *Šakr*, *Šākir*; ID 205 *Banū Šakr*, *aš-Šakīr*, *Banū Šākir*, 257 *Banū Šākir*, WR 415; HB 33 *Šykur*; Cantineau 150 *škrw*; PNNR 63 *škrw*; HIn 353 Saf.; Hismaic KJC 634.

-fa. of *bnbs¹r* KJC 634

s²klt *šakala* ‘bind a beast’, *šakl* ‘resemblance’, *šuklah* ‘redness mixed with white’, *šāklah* ‘flank’: cf. CIK 524,2 *Šakal*; HIn 354; Hismaic TIJ 3 (Tr.N).

s²km *šakama* ‘repay, compensate’, *šukm* ‘gift’: CIK 524,2 *Šakm*, CIK 531,2 *Šukm*, cf. *Šukāmah*; cf. ID 87 tc.; WR 420; Cantineau 150 *škmw*, *škmʾ*; PNNR 63; HIn 354 Saf.; Hismaic KWM 2.

-s. of *ẓr* KWM 2

s²kmlh Cmpd., see *s²km*: cf. CIK 524,2 *Šukmallāt*; cf. ID 315; Cantineau 150 *škmʾlhy*; PNNR 63; Hismaic AMJ 46, AMJ 135, KJC 200.

-fa. of *grmlh* KJC 200

-s. of *s¹ʿd* -s. of *ngm* AMJ 135

s²l See *s²ll* or *s²wl*, ‘rose, became elevated’: Cantineau 150 *šly*, *šlʾ*; PNNR 64; LittNE 2 235 *šly*, *šlyw*; Stark 114 *šlʾ*; HIn 355 Saf.; Hismaic KWM 7, TIJ 445, TIJ 459.

-s. of *ʾs¹* TIJ 445, TIJ 459

-s. of *ʾs¹rk* KWM 7

s²ll *šalla* ‘drive away, wither, become disabled’, *šalal* ‘unsoundness in the hand’: CIK 525,1 *aš-Šalal*; ID 302 *Šulail*; BDrN 12 *Šalāl* etc.; HB 33

Šelīl; HIn 355 Lihyn, Tham.C JS 118, JS 135, JS 137, JS 151, JS 162; Hismaic KJB 73.

-s. of *ʾftḥ* KJB 73

s²ln See *s²l* and *s²ll*: Hismaic SIAM 39b*.

-fa. of *ʿtnl* SIAM 39b*

s²mt *šamita* 'rejoice at the affliction of an enemy', *šāmit* 'rejoicing at the affliction of an enemy', or from *s²mm*, see *s²mmt*: BDrN 12 *Šāmit* Cantineau 152 *šmtw*, cf. *šmytt*; PNNR 65; HIn 356 Lihyn, Saf. add MSTJ 7, 12; Tham.B JS 612 (doubtful); Hismaic JS 745 LAU 26, TIJ 95, TIJ 267, TIJ 269, TIJ 331, TIJ 448.

-fa. of *s¹hrt* TIJ 331

-fa. of *mlʾm* JS 745

-s. of *ʾmt* TIJ 95

-s. of *tʿ--* -fa. of *s¹hrt* TIJ 269

-s. of *s¹ʿdʾl* TIJ 267, TIJ 448

s²md cf. HIn 357 *s²mdl* Saf. SIJ 856; Hismaic JS 658*.

-fa. of *s¹lmt* JS 658*

s²mrḫ *šimrāḫ* 'stalk of a palm, head of a mountain', *šumrūḫ* 'slender and soft branch': Cantineau 152 *šmrḥ*, *šmrḥw*; PNNR 65; LittNE 1 26 *šmrḥ*, 2 235 *šmrḥ(w)*; HB 33 *Šemruḫ*, *Šmêrīḫ*; HIn 357 Saf.; Hismaic KJA 115, KJA 199*, KJB 2, KJC 110, KJC 179, KJC 310, KJC 311.

-s. of *ḏky* -s. of *ʾḏkw* KJC 179

s²mmt *šamma* 'smell', *šamam* 'highness of the nose', *šamūm* 'fragrant thing': cf. Cantineau 151 *šmw*; PNNR 65; Hismaic KJC 203*.

s²nʾt *šaniʾa* 'hate', *šanʾ*, *šanāʾt* 'vehement hatred', *šanūʾah* 'keeping aloof from unclean things': cf. CIK 526,2 *Šanūʾa*; cf. Cantineau 152 *šnʾ*; PNNR 65; HIn 359 Saf.; Hismaic AMJ 115.

s²hr *šahara* 'make apparent, conspicuous', *šahr* 'new moon': CIK 523,2 *Šahr*; ID 316 *Banū al-Šahr*; BDrN 13 *Šāhir*; HB 33; Cantineau 149 *šhrw*; PNNR 63; HIn 360 Lihyn, Saf., Tham.B HU 554=JS 235; Hismaic KJC 5, TIJ 38, TIJ 313, TIJ 321.

-fa. of *bqqt* KJC 5

-s. of *tml°* -fa. of *ʿbdgns²* TIJ 38

-s. of *w ʿl* -s. of *ʾglḥ* TIJ 321

s²hry See *s²hr*: HIn 361; Hismaic TIJ 2.

-s. of *rfd* TIJ 2

s²hl *šahl* 'mixture of two colours', *šuhlah* 'tinge of blueness in the black of the eye': CIK 523, 1-2 *Šahl*, CIK 530,1 *Šihāl*; ID 207, ID 306, ID 307; WR 415; HIn 361 Saf. add SIAM 37; Hismaic JS 179.

-fa. of *ʿbd* JS 179

ṣbḥ *ṣabaḥa* 'offer a morning draught', *ṣabiḥa* 'have whiteness mixed with red', *ṣabuḥa* 'be beautiful, comely', *ṣubḥ* 'daybreak, dawn', *ṣabīḥ* 'beautiful, comely': CIK 534,2 *Ṣabbaḥ*, CIK 538,2-539,1 *Ṣubāḥ*, CIK 539,1-2 *Ṣubḥ*, CIK 539,1 *Ṣubaiḥ*; ID 40, ID 41, ID 119, ID 122; WR 147; BDrN 13 *Ṣubḥ* etc.; cf. HB 34 *Ṣabḥā* fem., *Ṣubḥī*; HIn 365 Saf.; Hismaic TIJ 318, TIJ 358.

-fa. of *s¹rr* TIJ 358

-s. of *ḥrmn* TIJ 318

ṣbn *ṣabana* 'turn away (a gift)': HIn 366 Saf.; Hismaic KJA 110.

ṣtm *ṣatm*, *ṣatam* 'strong, sturdy': HIn 367 Saf. add JaS 178; Hismaic TIJ 364.

-s. of *s¹ḫl* TIJ 364

ṣḥb *ṣaḥiba* 'associate, keep company with', *ṣāḥib* 'a companion': CIK 535,2 *Ṣaḥb*, *Ṣāḥib*, CIK 540,2 *Ṣuḥb*; WR 145; Cantineau 139 *ṣḥbw*; PNNR 57; HIn 367 Saf.; Hismaic KJA 26, KJA 154, KJB 158, KJC 699.

-fa. of *bll* KJC 699

-fa. of *dʿm* KJA 26, KJA 154

-s. of *ʾs¹lm* -s. of *ms¹lm* -fa. of *dʿm* KJB 158

ṣḥm *ṣuḥmah* 'blackness inclining to yellow', *ʾaṣḥam* 'black inclining to yellowness': HIn 368; Hismaic TIJ 28.

-fa. of *tm(k)tb* TIJ 28

ṣḫr *ṣaḫr* 'rocks': CIK 535,2-536,1 *Ṣaḫr*, 540,2 *Ṣuḫair*; ID 135 etc.; WR 142; HIn 368 Saf.; Hismaic TIJ 189.

-fa. of *ḏrf* TIJ 189

ṣr *ṣarra* ‘make a sound or noise’, *ṣirr* ‘cold, intense cold’; *ṣwr*, *ṣāra* ‘make (the neck) incline or lean’, *ṣawr* ‘small palm-trees, bank of a river’, *ṣūr* ‘a horn’, *ṣyr*, *ṣāra* ‘become’, *ṣīr* ‘conclusion, result’: CIK 538,2 *Ṣirr*; HIn 370 Saf.; Hismaic KJB 14*.

ṣrm *ṣarama* ‘cut off, severe’, *ṣurm* ‘separation from a friend’, *ṣarīm* ‘cut, one whose ear has been cut off entirely’: CIK 538,1 *Ṣarīm*, CIK 541,2 *Ṣuraim*; ID *Banū Ṣarīm* 99 etc.; HIn 371 Lihyn (doubtful), Saf. add SIAM 19; Hismaic CSP 2.

-s. of *wtr* -s. of *flgt* -s. of *tmds²r* CSP 2

ṣṣrt Syr. *ṣīṣrā* ‘cricket’, cf. Ar. *al-ṣarṣar*: Hismaic AMJ 110, AMJ 111.

-s. of *ʾrs²* AMJ 110

ṣ ʿb *ṣa ʿuba* ‘be difficult’, *ṣa ʿb* ‘difficult, hard’: CIK 533,1-534,2 *Ṣa ʿb*, *as-Ṣa ʿb*; ID 207; WR 142; Cantineau 140 *ṣ ʿbw*; PNNR 57; HIn 372 Saf.; Hismaic KJC 147i, TIJ 202 + TIJ 203.

-fa. of *ʾ ʿfr* KJC 147i

-fa. of *ʿzn* -fa. of *ṭnn* TIJ 202 + TIJ 203

ṣ ʿd *ṣa ʿida* ‘ascend, go up’, *ṣa ʿad* ‘vehement punishment’, *ṣa ʿūd* ‘mountain road’, *ṣa ʿīd* ‘high or elevated land or ground’; CIK 538,1 *aṣ-Ṣa ʿūd*; in cmpd., Cantineau 140 *ṣ ʿdʾl*; PNNR 57; Stark 109 *[ṣ ʿdw]*, *ṣ ʿdy*; HIn 372 Saf.; Hismaic TIJ 119.

ṣ ʿdt See *ṣ ʿd*, *ṣa ʿdah* ‘high land’: HIn 372; Hismaic AMJ 36, KJC 591, TIJ 67.

-fa. of *s¹ḫr* TIJ 67

-fa. of *brs²t* AMJ 36

ṣkt *ṣakka* ‘strike’, *ʾaṣakk* ‘knock-kneed’, *ṣakkah* ‘vehemence of the summer midday heat’: HIn 374 Saf.; Hismaic TIJ 22*.

-fa. of *s²ṯ ʿ* TIJ 22*

ṣlf *ṣalifa* ‘praise, oneself, boast’, *ṣalif* ‘(clouds) containing no water, (hard ground) that produces no plants’: HIn 374; Hismaic TIJ 12.

-s. of *ʾbʾns¹* TIJ 12

ṣmn *ṣamma* ‘be deaf’, *ṣammān* ‘hard ground’, *ṣimmah* ‘courageous’: cf. CIK 538,2 *aṣ-Ṣimma*; cf. Stark 109 *ṣmʾ*; HIn 376 Saf.; Hismaic KJA 204.

ṣmy *ṣmy*, *ṣamā* ‘hasten’: HIn 376; Hismaic TIJ 302, TIJ 457.

-s. of *nǧt°* -fa. of *b-q* TIJ 302

-s. of *zr* TIJ 457

ṣhb *ʾaṣhab* ‘reddish with black in the middle’: CIK 540,1 *Ṣuhāb*, *Ṣuhaib*; ID 202; WR 148; cf. Cantineau 139 *ṣhbn*; HIn 377 Saf.; Hismaic KJB 164*; PNNR 56.

ṣhbt See *ṣhb*, *ṣuhbah* ‘redness with black in the interior’: CIK 535,2 *Ṣahba*, cf. *aṣ-Ṣahbāʾ*, CIK 540,1 *Ṣuhāba*, *Ṣuhaiba*; cf. WR 145; HIn 378 Saf.; Hismaic KJB 89, KJC 99, KJC 118, KJC 180, KJC 197, KJC 213, KJC 374, KJC 725, WAM T 12.

-s. of *s² ʿlh* WAM T 12

-s. of *mgʾ* KJC 180

-s. of *qnt* KJC 118

ṣḥṭ Hismaic CTSS 3.

-s. of *wd* CTSS 3

ṣwm *ṣwm* ‘abstain from food and drink’: cf. Cantineau 138 *ṣʾymt*; HIn 379 Qat.; Hismaic AMJ 4.

ḍʾn *ḍaʾn* ‘sheep’: Hismaic TIJ 301.

-fa. of *bn* TIJ 301

ḍb *ḍabba* ‘cleave to the ground, flow’, *ḍabb* ‘lizard’: CIK 240,1 *Ḍabb*; ID 290; WR 152; cf. HB 35 *Ḍbeib*; HIn 380 Saf.; Hismaic KJA 247*, 289*.

-s. of *ʿlb* KJA 289*

ḍbʾ *ḍabaʾa* ‘cleave to the ground, hide’: CIK 240,1 *Ḍabbāʾ*, *Ḍābiʾ*; ID 134; HIn 380 Saf.; Hismaic KJB 110.

-fa. of *bnʾmt* KJB 110

ḍbʿt *ḍabaʿa* ‘stretch out the arms to strike’, *ḍabʿ* ‘quick pace of a horse’, *ḍabuʿ* ‘hyena’: CIK 242-243,2 *Ḍubaiʿa*; ID 190 etc.; WR 155 *Ḍubāʿa*; HIn 381 Saf.; Hismaic AMJ 26.

-s. of *ng(y)* AMJ 26

ḍbʿn *ḍibʿān*, pl. *ḍabāʿīn* ‘male hyena’; CIK 241,2 *Ḍibʿān*; BDrN 13 *Ḍabʿān*; HIn 381 Saf.; Hismaic KJB 86, KJC 574.

-s. of *ʿbdʿbdt* KJC 574

ḍbn *ḍibn* ‘armpit, side of the road, hard ground’, *ḍaban* ‘deficiency’ or see *ḍb*: cf. ID 165 *Banū Ḍabīnah*; Hismaic AMJ 123.

ḍḥk *ḍaḥika* ‘laugh, wonder’: CIK 240,2-241,1 *aḍ-Ḍaḥḥāk*; ID 274 *al-Ḍaḥḥāk*; WR 152; HIn 381 Saf.; Hismaic KJA 101, KJA 175*, KJC 264, KJC 458, LAU 10, TIJ 12a.

-fa. of *drg* KJA 101, KJA 175*

-fa. of *drs*[1] KJC 264, KJC 458

-s. of *grm* TIJ 12a

ḍḥkl Hismaic TIJ 485.

-fa. of *whbʾl* TIJ 485

ḍr *ḍarra* ‘harm, injure’, *ḍwr*, *ḍyr*, *ḍāra* ‘harm, injure’, *ḍariya* ‘be addicted, devoted’: CIK 241,2 *Ḍaur*, cf. CIK 242,1-2 *Ḍirār*; ID 196 *Banū Ḍaur*, cf. *Ḍirār* ID 28, ID 174; HB 35 *Ḍairī*; HIn 382 Lihyn, Saf.; Hismaic AMJ 82, AMJ 108, AMJ 143.

ḍhn Hismaic WAM 5*.

-fa. of *ʾbn* WAM T 5*

ṭbb *ṭabb* ‘knowing, possessing knowledge’: CIK 554,1 *aṭ-Ṭabīb*; HIn 386; Hismaic LAU 24, TIJ 110.

-fa. of *brqs*[2] LAU 24

ṭgd Hismaic KJB 595*.

ṭr *ṭarr* ‘sharpen, carry off’, *ṭurr* ‘collective body of men’, *ṭwr*, *ṭāra* ‘go, hover’, *ṯawr* ‘a time’, *ṭyr*, *ṭāra* ‘fly’, *ṭayr* ‘a bird, something that flies’; BDrN 14 *Ṭêr*; HIn 387 Saf.; Hismaic JS 622*, JS 694*; PNNR 33.

-s. of *ʾmr* JS 622*

-s. of *yʿly* JS 694*

ṭrq *ṭaraqa* ‘come by night’, *ṭarq* ‘a striking, knock’, *ṭāriq* ‘coming by night’, *ṭarīq* ‘road’: CIK 557,1-2 *Ṭāriq*; WR 445; HIn 387 Saf.; Hismaic TIJ 141, TIJ 294, TIJ 469.

-fa. of *grs²* TIJ 141

-fa. of *wḥtt* TIJ 294, TIJ 469

ṯfḏ *ṭafaḏa* ‘bury’, *ṭafḏ* ‘tomb’: HIn 388; Hismaic TIJ 407.

ṭnn *ṭanna* ‘make a continuing sound (hum, quack etc.), *ṭanīn* ‘humming, buzzing’, *ṭyn*, *ṭīn* ‘mud’: HB 37 *Ṭīnān*; TIJ 13, TIJ 94*, TIJ 202 + TIJ 203; PNNR 33 *ṭnnw*.

-fa. of *ʾhd* TIJ 94*

-fa. of *grs²ʿ* TIJ 13

-s. of *ʿzn* -s. of *ṣʿb* TIJ 202 + TIJ 203

ṭwʾt Hismaic AMJ 96*.

ṭwby Hismaic LAU 2*.

tyʾ CIK 555, 1-2 *Ṭaiyiʾ*; ID 7 etc.; cf. Cantineau 101 *ṭyw*, *ṭy*; PNNR 32; Saf. see Milik 1972: 100, C 2617, 2795, 5089, also CSNS 1004, CSNS 1011, CSNS 1046, JaS 10, *ṭy* (Milik *ibid*) C 4446*; Hismaic LAU 16 (Tr.N).

ṭyft *ṭayf* ‘an apparition’, *ṭwf*, *ṭāʾif* ‘going round’, *ṭāʾifah* ‘a band of men’: cf. CIK 555,1 *Ṭāʾif*, CIK 557,2 *Ṭauwāf*; HIn 390 Saf.; Hismaic KJC 586, KJC 769.

ṭyq *ʾaṭāqa* ‘be able’, *ṭawq* ‘necklace’, *ṭāqah* ‘ability or power’: cf. CIK 557,2 *Ṭauq*. Hismaic KJA 245, KJB 7.

-fa. of *kmnt* KJA 245

-s. of *nṭṭ°* -fa. of *ftḥt* KJB 7

ẓr *ẓarra* ‘split off a fragment of stone’, *ẓirr* ‘a sharp-edged stone, flint’: HIn 391 Saf.; Hismaic KWM 2; PNNR 33.

-fa. of *s²km* KWM 2

ẓʿt Hismaic LAU 20a.

ẓʿl Hismaic TIJ 98 (fem.).

-d. of *mb[]rr* TIJ 98

ẓʿn *ẓaʿana* ‘journey, depart’, *ẓaʿūn* ‘a camel used for work and bearing burdens’, *ẓāʿin* ‘journeying, going away’: cf. Cantineau 102 *ṭʿnw*; PNNR 33; HIn 392-393 Saf.; Hismaic JS 702, KJC 716, KJC 721*.

-fa. of *ʾs¹d* JS 702

-s. of *ṯbr* ? KJC 716

ẓ ʿnt See *ẓ ʿn*: CIK 613,2-614,1 *Ẓā ʿinah*; ID 109; HIn 393 Saf.; Hismaic KJA 88, KJC 295, KJC 341, KJC 749.

-fa. of *s¹lm* KJA 88, KJC 295, KJC 749

ẓm *ʾaẓmā* 'anything withered': Hismaic TIJ 497*.

-fa. of *hnʾt* TIJ 497*

ẓnn *ẓanna* 'think, conjecture, doubt', *ẓanūn* 'suspicious, one who thinks evil', *ẓanīn* 'suspected': cf. Cantineau 102 *ṭnnw*; PNNR 33; HIn 394 Saf.; Hismaic KJA 138.

-s. of *wḍʾ* -fa. of *s¹rw* KJA 138

ʿʾs¹ Hismaic TIJ 283*.

ʿb See *ʿbb*, *ʿyb*, *ʿāba* 'be unsound, defective', *ʿayb* 'imperfection': HIn 396 Lihyn (doubtful), Saf., Tham.D JS 183; Hismaic KJA 124, KJA 147, KJA 260, KJA 275, KJA 338.

ʿbʾ *ʿabaʾa* 'pack up goods or utensils', *ʿabʾ* 'the light of the sun', *ʿibʾ* 'load, burden', *ʿabāʾ* 'stupid, dull': Hismaic KJC 377.

ʿbb *ʿabba* 'drink water without taking a breath', *ʿubab* 'berries', *ʾaʿabb* 'poor, thick-nosed': cf. Stark 71 *ʾʿb*; Hismaic KWM 15, KWM 17, TIJ 58.

-fa. of *bḥs²s²* KWM 17

-s. of *qs¹* KWM 15

ʿbṯ *ʿabaṯa* 'mix or mingle', *ʿabaṯ* 'play, sport'; cf. Cantineau 127 *ʿbt*; PNNR 48; HIn 396 Saf. add JaS 113, JaS 115, JaS 130b; Hismaic KJA 18*.

ʿbd *ʿabd* 'servant, slave', *ʿabid* 'angry, disdaining': CIK 101,1-103,1 *ʿAbbād*; CIK 103,2-105,1 *ʿAbd*, CIK 135,1 *ʿAbīd*, *ʿÂbid*, CIK 351,1 *ʿIbād*, CIK 559,1 *ʿUbād*, CIK 559,2-562,1 *ʿUbaid*; ID 57 etc.; Cantineau 125 *ʿbd*, *ʿbdʾ*, *ʿbdw*, *ʿbwdw*, *ʿbydw*; PNNR 46, PNNR 47, PNNR 48; LittNE 1 24 *ʿbdw*, *ʿbydw*; Stark 102 *ʿbdʾ*; HIn 396-397 Lihyn, Saf., Tham.B JS 344, JS 419; Hismaic AMJ 43, AMJ 102, AMJ 131, JS 179, KJA 36, KJA 113, KJA 116, KJA 187, KJA 320, KJA 337, KJB 26, KJB 82, KJB 88, KJC 18, KJC 23, KJC 25, KJC 97, KJC 107, KJC 125, KJC 169, KJC 188, KJC 290, KJC 378, KJC 436, KJC 442, KJC 453, KJC 489, KJC 526, KJC 682,

KJC 685, KJC 703, KJC 715, KJC 735, KJC 768, KWM 9, TIJ 39, TIJ 50, TIJ 71, TIJ 120, TIJ 134, TIJ 165, TIJ 179, TIJ 229, TIJ 425, TIJ 433, WAM T 14, WAM T 34, WAM T 37.

-fa. of *tm* -fa. of *ʾs¹d* KWM 9

-fa. of *tmlh* KJC 703

-fa. of *gryt* WAM T 34

-fa. of *ḥzbr* KJC 25, KJC 97, KJC 489

-fa. of *ḫbbt* TIJ 50

-fa. of *s²ḥḥ* KJC 125

-fa. of *ʿrk* -fa. of *rbqt* -fa. of *n ʿmy* -fa. of *qnt* -fa. of *ʿlyn* AMJ 131

-fa. of *mtn ʿ* KJB 26

-fa. of *m-ʾktb* KJC 442

-s. of *tmd* WAM T 14

-s. of *tm* °TIJ 229

-s. of *zdqm* KJA 187, KJC 768

-fa. of *ḥdmr* KJB 88

-fa. of *ḥzbr* KJC 107

-s. of *ʾʿbd* -fa. of *ḥdmr* KJC 188

-s. of *ʾʿbd* -fa. of *ḥzbr* KJC 169

-s. of *s¹--* TIJ 425

-s. of *s¹lm* TIJ 433

-s. of *s¹m* WAM T 37

-s. of *s¹yr* KJA 113, KJA 337, KJC 378, KJC 685, KJC 735, TIJ 179

-s. of *s¹lm* KJA 320, KJB 82, KJC 290

-s. of *s²hl* JS 179

-s. of *ʿṣm* -s. of *ʿ--* TIJ 39

-s. of *hml* -fa. of *gryt* TIJ 134

-s. of *ws¹ ʿ* TIJ 165

-s. of *whblh* -s. of *s¹ḫl* AMJ 43

-s. of *yḏr* -fa. of *yḏr* KJA 36

ʿbdʾḥwr Cmpd., see *ʿbd* and *ʾḥwr*: Hismaic KJC 757.

ʿbdʾlʾḥwr Cmpd., see *ʿbd* and *ʾḥwr*: Hismaic KJC 202*.

-s. of *mḥwr* KJC 202*

ʿbdʾlyb Cmpd., see *ʿbd* and *ʿbdʾyb*: Hismaic HS 1, HS 2.

ʿbdʾyb Cmpd., see *ʿbd*, *ʾwb*, *āba* 'return, repent': cf. Jeffery 1938: 73 *ʾAyyūb*; HIn 87 *ʾyb* Tham.B HU 764 (doubtful); Hismaic KJA 168, KJC 631a, MuNJ 1.

-s. of *s¹ʿd* KJA 168, MuNJ 1

ʿbdt See *ʿbd*, *ʿabadah* 'disdain, scorn, strength': CIK 101,1 *ʿAbada*, CIK 134,1-2 *ʿAbda*, CIK 135, *ʿAbīda*, CIK 103,2 *ʿAbbūda*, CIK 559,1-2 *ʿUbāda*, CIK 563,2-564,1 *ʿUbaida*, CIK 565,1 *ʿUbda*; ID 160; Cantineau 125 *ʿbdt*, *ʿbydt*; PNNR 48; HIn 398 Saf., Hismaic KJA 194, KJC 437.

-s. of *ʿm* -fa. of *ʾʿbd* KJA 194

ʿbdg Cmpd., see *ʿbd*, *gy* and *ʿbdlg*: Hismaic TIJ 156.

ʿbdgd Cmpd., see *ʿbd*, *jadd* 'fortune': CIK 124, 1 *ʿAbdaljadd*; Cantineau 76 *jdʾ*; HIn 398 Saf.; Hismaic KWM 12.

-fa. of *ḥrk* KWM 12

ʿbdgns² Cmpd., see *ʿbd*: Hismaic TIJ 38.

-s. of *s²hr* -s. of *tml* TIJ 38

ʿbdḥrṯt Cmpd., see *ʿbd*: CIK 124,2 *ʿAbdḥāriṯ*; Cantineau 126 *ʿbdḥrtt*; Hismaic KJC 272.

ʿbdḥwr Cmpd., see and *ḥwr*: Hismaic JS 1124.

ʿbdṯs²ry Cmpd., see *ʿbd*: Cantineau 126 *ʿbddwšrʾ*; PNNR 46: Hismaic AMJ 146.

ʿbds¹qlt Cmpd., see *ʿbd*: Cantineau 153 *šqylt*; PNNR 66 *šqylt*; HIn 399; Hismaic TIJ 204*, TIJ 231*, TIJ 311.

-s. of *ʿmr* TIJ 204*, TIJ 311

ʿbdḍn Cmpd., see *ʿbd*, *ḍinn* 'a thing highly esteemed of which one is tenacious': Hismaic RTI B.

ʿbdʿbdt Cmpd., see *ʿbd*: Cantineau 126 *ʿbdʿbdt*; PNNR 47; King 1988: 313 + n.11 Saf. *ʿbdʿbdt*; LittNE 2 235 *ʿbdʿbdt*; Hismaic KJC 574.

-fa. of *ḍbʿn* KJC 574

ʿbdʿzy Cmpd., see *ʿbd*: Cantineau 126 *ʿbdʾlʿzy*; PNNR 46; Hismaic HS 551.

-s. of *yd ʿ* HS 551

ʿbd ʿmn Cmpd., see *ʿbd* and *ʿmn*: Cantineau 126 *ʿbd ʿmnw*; PNNR 47; Savignac AS no.9 *ʿbd ʿmnw*; HIn 399; Hismaic TIJ 56a*.

ʿbdqn Cmpd., see *ʿbd* and *qn*; cf. Cantineau 143 *ʾbn ʾlqyn*, *ʾbn ʾlqnw*, *ʾbn ʾlqny*; cf. PNNR 9; Hismaic JS 661.

ʿbdlg Cmpd., see *ʿbd* and *gy* and *ʿbdg*: Cantineau 76, Cantineau 125 *ʿbd ʾlg*, *ʿbd ʾl[g]w*, *ʿbd ʾlgy ʾ*, cf. Cantineau 65, Cantineau 76 *ʾmt ʾlg ʾ*; PNNR 46 also *ʿbd ʾlg ʾ*, PNNR 13 *ʾmt ʾlg ʾ*; LittNE 2 234 *ʿbd ʾlg ʾ*; Hismaic KJC 205, KJC 647.

-fa. of *ʾ[f]l* KJC 205

ʿbdlh Cmpd., see *ʿbd*: Cantineau 126 *ʿbd ʾlh*, *ʿbd ʾlhy*, *ʿbdlhy*; PNNR 46, also *ʿbd ʾlh ʾ*; HIn 400 Saf., Hismaic KJC 446, Ph 345 bis, g, TIJ 213, TIJ 220.

-s. of *ġt* TIJ 220

ʿbdmk Cmpd., see *ʿbd*: Cantineau 114 *ʿbdmlkw*; PNNR 47 *ʿbdmlkw*, *ʿbdmnkw;* Milik 1976: 145 *ʿbdmlkw*, *ʿbdmnkw*; Milik 1958-59: 354-355; HIn 400; Hismaic MNM c 7.

-s. of *khl* MNM c 7

ʿbdmnt Cmpd., see *ʿbd*: CIK 126,1-2 *ʿAbdmanāt*; ID 82 etc.; WR 30; Cantineau 126 *ʿbdmnwtw*; PNNR 47 *ʿbdmnwty*; HIn 400 Tham.D JS 1, JS 584; Hismaic HS 306.

ʿbr *ʿabara* 'cross', *ʿābir* 'traveller, passer-by', *ʿabbār* 'a camel strong to journey', *ʿabrah* 'a tear': cf. CIK 565,1 *ʿUbra*; cf. ID 291; HIn 402 Saf. (doubtful); Hismaic KJA 149, KJC 381.

ʿbs[1] *ʿabasa* 'frown', *ʿābis* 'a man frowning', *al-ʿābis*, *al-ʿabbās* 'the lion': CIK 103,1-2 *ʿAbbās*, CIK 135,1 *ʿÂbis*, CIK 135,2-136,1 *ʿAbs*, CIK 564,1 *ʿUbais*; ID 27, ID 168, ID 222 etc.; WR 347; Cantineau 127 *ʿbyšw*; PNNR 48; Stark 103 *ʿbs ʾ*; HIn 402 Saf., Tham.B JS 254; Hismaic KJC 267.

-fa. of *ʿmr* KJC 267

ʿbn *ʿabana* 'be thick, big': Cantineau 126-127 *ʿbyn*; PNNR 48; Stark 103 *ʿbny*; HIn 403 Saf., Tham.C JS 114, Tham.D RyGT 1; Tham.E KJB 51*, TIJ 432.

ʿtb ʿattāb ‘one who reproves, blames, censures’; CIK 204,1 ʿAtīb, CIK 204,2-205,1 ʿAttāb; ID 43, ID 49, etc.; WR 93; HIn 404; Hismaic TIJ 372.

ʿtm ʿatm ‘tarrying, delaying’, ʿātim ‘tardy, late’: CIK 204,2 ʿAtm; HIn 405 Saf.; Hismaic 383.

ʿtnl Cmpd. ?; Tham. ? WHI 86; Hismaic SIAM 39b*.
-s. of *s²lʾn* SIAM 39b*

ʿṯ ʿuṯṯ ‘moth’, ʿyṯ, ʿāṯa ‘act corruptly’: CIK 149,2 ʿAiṯ; WR 54; HIn 406 Saf.; Hismaic TIJ 351.
-fa. of *hdd* TIJ 351

ʿṯmn ʿaṯama ‘set a bone badly’, ʿaṯim ‘badly set bone’, ʿuṯmān ‘young ḫubārā bustard’: CIK cf. 205,2 ʿAṯm, CIK 578,2-580,1 ʿUṯmān; ID 31, ID 56 etc.; WR 367; HIn 407 Saf., Tham.B HU 427; Hismaic TIJ 349.
-fa. of *grmʾl* TIJ 349

ʿgb ʿajiba ‘wonder’, ʿajīb ‘wonderful’: CIK 144,1 ʿAjab; HIn 407 Saf.; Tham.B HU 794; Hismaic TIJ 223 (Tr.N).

ʿgy ʿajiy ‘foster child, orphan’: HIn 408; Hismaic TIJ 96.
-s. of *ġṯlh* TIJ 96

ʿḫms² HIn 208: Hismaic TIJ 520, TIJ 521.

ʿd ʿadda ‘reckon, calculate’, ʿidd ‘multitude, muchness, a spring’, see ʿwd, ʿawd ‘return’, ʿīd ‘feast day’: CIK 352,2 ʿIdd; ID 29 etc. ʿÂd; Stark 104 ʿdʾ; cf. BDrN 14 cf. ʿOdêyid, BDrN 16 ʿId; HB 42 ʿĪd; HIn 408-409 Saf.; Hismaic KJA 83, TIJ 4 (Tr.N), TIJ 236.
-fa. of *gs¹* -fa. of ʿm TIJ 236
-s. of *ḫl* -fa. of ʿrb KJA 83

ʿdm ʿadima ‘be destitute’, ʿadīm ‘destitute’: WR 47 ʿAdīm; Cantineau 127 ʿdmw; PNNR 48; HIn 410 Saf.; Hismaic MU 1*.
-fa. of ʿẓ -fa. of -ḍ MU 1*

ʿdnn ʿadana ‘stay, dwell’: CIK 142,1 ʿAdnān, cf. CIK 565,1 *Udain*; ID 20; Cantineau 127 ʿdnwn, also ʿbd ʿdnwn; PNNR 49; cf. Stark 104 ʿdn; HIn 410 Saf.; Hismaic TIJ 246, TIJ 307.
-s. of --- TIJ 246

ʿḏ See *ʿwḏ*, *ʿawḏ* ‘protection’: CIK 206,2 *ʿAuḏ*; ID 169 *Banū ʿAuḏ*; Cantineau 128 *ʿwdw*, *ʿwd*; PNNR 49; LittNE 1 24 *ʿwdw*; Stark 104 *ʿwdw*; HIn 411 Lihyn, Saf., Tham.C WTI 75; Hismaic KJA 14, TIJ 507.

-s. of *mlkt* TIJ 507

ʿr *ʿarr* ‘mange’, *ʿarīr* ‘stranger’, *ʿyr*, *ʿāra* ‘go, journey’, *ʿār* ‘disgrace’, *ʿīr* ‘caravan’, *ʿayr* ‘ass’, or see *ʿwr*: cf. CIK 357,2-358,1 *ʿIrār*, CIK 574,1 *ʿUrār*; cf. ID 254; BDrN 14 *ʿIrr*; HIn 414 Saf.; Hismaic CTSS 2a, KJC 496.

ʿrb *ʿarīb* ‘a man chaste, uncorrupt or free from barbarousness in speech’; CIK 192,1 *ʿArb*, CIK 192,2-193,1 *ʿArīb*, CIK 358,1 *ʿIrb*; ID 323 *ʿUraib*, CIK 250 etc.; Cantineau 134 *ʿrbyw*; PNNR 54; cf. Stark 107 *ʿrby*; HIn 414 Saf.; Tham. ? HE 64; Hismaic KJA 15, KJA 47, KJA 83, KJB 10*, KJC 245, KJC 765.

-s. of *ḫrm* KJC 765

-s. of *ʿd* -fa. of *mqẓ* KJA 83

ʿrs¹ *ʿarisa* ‘cleave to’, *ʿaris* ‘one who remains’, *ʿirs* ‘a spouse’: CIK 574,2 *al-ʿUrs*; Cantineau 134 *ʿryš*; PNNR 54; cf. BDrN 14 *ʿArsān* etc.; cf. HB 39; HIn 415 Saf.; Hismaic KJA 52, KJA 112, KJB 170, KJC 66, KJC 80, KJC 106, KJC 207, KJC 222, KJC 261, KJC 294, KJC 337, KJC 338, KJC 342, KJC 393*, KJC 440, KJC 442a, KJC 495*, KJC 516, KJC 522, KJC 615, KJC 629, KJC 651, KJC 763.

-fa. of *ʾs¹lh* KJC 440

-s. of *ḫr* KJA 52

-s. of *ḥrs¹* KJC 207, KJC 261, KJC 337, KJC 516, KJC 615

-s. of *ʾs¹lm* KJA 112, KJC 442a

-s. of *ms¹lm* KJC 522

ʿrḍt *ʿaruḍa* ‘be broad, wide’, *ʿirḍ* ‘side of a valley, honour’, *ʿurḍah* ‘an obstacle’: HIn 415 Saf.; Hismaic KJC 752*.

ʿrk *ʿaraka* ‘rub, press’, *ʿarik* ‘a man who throws down his protagonists often’: cf. CIK 191,2-192,1 *ʿArakī*; HIn 416 Saf.; Hismaic AMJ 131.

-s. of *ʿbd* -fa. of *rbqt* -fa. of *nʿmy* -fa. of *qnt* -fa. of *ʿlyn* AMJ 131

ʿrn See *ʿr* or *ʿarana* 'be accustomed', *ʿaran* 'disease of the legs, ulcers', *ʿirān* 'a piece of wood inserted in a camel's nose': cf. CIK 574,1 *ʿUrainah*; cf. ID 314 *Banū ʿArīn*; HIn 416 Sab.; Hismaic KJC 703b.

ʿrhz HIn 416 Saf. add WH 2509; Hismaic KJA 319, KJC 29, KJC 168, KJC 425, KJC 582, KJC 593.

-s. of *mhṣ* -s. of *ʾsʲy* KJC 29

ʿrw *ʿrw*, *ʿarā* 'come seeking help', *ʿirw* 'one who remains calm', *ʿurwah* 'a thing on which reliance is placed'; cf. CIK 194,1 *ʿArwān*, 574,2-575,1 *ʿUrwa*; cf. ID 58, ID 313 etc.; HIn 417; Hismaic JS 719, JS 729 *bis*.

ʿry *ʿariya* 'be naked', *ʿarāʾ* 'nakedness'; cf. CIK 575,2 *al-ʿUryān*; ID 242; cf. BDrN 15 *il-ʿAryān*; HIn 417 Saf.; Hismaic KJA 102*.

ʿzz *ʿazza* 'be mighty or powerful', *ʿazīz* 'mighty, potent': CIK 218,1 *ʿAzīz*; ID 261 etc.; BDrN 15 *ʿAzīz*; HB 39; Cantineau 129 *ʿzyzw*; PNNR 50; LittNE 1 24 *ʿzzw*; Stark 105 *ʿzyz*; HIn 418 Saf.; Hismaic KJA 6*, KU 1, TIJ 152.

-fa. of *msʲk* KU 1

ʿzn See *ʿzz* or from *ʿwz*, *ʿāza* 'lack, need': HIn 419 Saf.; Hismaic TIJ 202 + TIJ 203, TIJ 339, TIJ 355.

-fa. of *ʿly* TIJ 339, TIJ 355

-s. of *ṣʿb* -fa. of *ṭnn* TIJ 202 + TIJ 203

ʿzy *ʿaziya* 'be patient, enduring', *ʿazāʾ* 'patience': cf. HB 39 *ʿÖzwe*, *ʿEzeije* fem.; Cantineau 129 *ʿzy* fem.; PNNR 50; Stark 105 *ʿzy* uncertain; HIn 419 Saf.; Hismaic JS 677.

ʿsʲn *ʿasana* 'fatten', *ʿisn* 'fatness' or from *ʿsʲ*, see under *ʾʿsʲ*: HIn 421 Saf.; Hismaic KJC 124.

ʿsʲy *ʿsw*, *ʿasā* 'become dry and hard (wood)', *ʿasiya* 'become aged', *ʿasiy* 'suitable, apt', *ʿāsⁱⁿ* 'thick, coarse, rough'; Cantineau 134 *ʿsʲw* ?; PNNR 53; CIK 149,2 *ʿAisāʾ*, 358,1 *ʿIsā*; BDrN 16 *ʿÎsā*; HB 40; HIn 421 Saf.; Hismaic KJA 38*.

ʿs² ʿušš ‘nest’, ʿyš, ʿāša ‘live’, ʿayš ‘life’; CIK 359,1 ʿÎš, CIK 576,1-2 ʿUšš, cf. CIK 150,1 ʿAiyāš; cf. Stark 107 ʿšy; HIn 421 Saf.; Hismaic KJC 583.

ʿs²b ʿušb ‘fresh herbage’: cf. CIK 576,1 *al-* ʿUšba; cf. HIn 421 ʿs²bt Saf.; Hismaic KJC 733.

-fa. of *gr* KJC 733

ʿs²ḥ Hismaic JS 739*.

ʿs²m ʿašima ‘be dried up’, ʿašam ‘greed’: CIK 200,1 *al-A* ʿšam, CIK 359,1 ʿIšm; Cantineau 135 ʿšmw; PNNR 54; HIn 422 Saf., Tham.B HU 480; Hismaic TIJ 521*.

ʿṣb ʿaṣaba ‘bind’: Cantineau 134 ʿṣbw; Hismaic KJC 707*; PNNR 53.

ʿṣft ʿaṣafa ‘blow strongly (wind), be swift, quick’, ʿaṣūf ‘swift (applied to camel etc.)’, ʿaṣīfah ‘ears of corn’: cf. CIK 576,2 ʿUṣaif; HIn 423 Saf.; Hismaic KJC 502.

-fa. of ʿwḏ KJC 502

ʿṣm ʿaṣama ‘prevent, defend’, ʿāṣim ‘defending’: CIK 202,1-203,2 ʿÂṣim, CIK 359,1 ʿIṣām, CIK 576,2 ʿUṣaim, CIK 576,2-577,1 ʿUṣm, ʿUṣum; ID 246 etc.; Cantineau 134 ʿṣm, *[* ʿ*]*ṣmw; PNNR 53; HIn 423 Lihyn, Saf., Tham.C JS 7, JS 126*; Hismaic AMJ 6, CTSS 1a, KJC 212, TIJ 39, TIJ 242.

-fa. of *tm* KJC 212

-s. of ʾmr TIJ 242

-s. of ʿ-- -fa. of ʿbd TIJ 39

ʿḍy ʿḍw, ʿaḍā ‘enchant’, ʿuḍu ‘limb’, ʿāḍⁱⁿ ‘having a sufficiency’: CIK 142,2 ʿÂḍī cf. ʿAḍawān; HB 40 ʿÖdeij; HIn 424 Saf.; Hismaic TIJ 248.

-s. of *krtm* TIJ 248

ʿṭ ʿaṭṭa ‘slit, rent (a garment)’, ʿwṭ, ʿāṭat ‘fail to conceive for several years’, ʿyṭ, ʿāṭat ‘be long in the neck (of a woman)’: Hismaic TIJ 99.

-fa. of *btr* TIJ 99

ʿṭs¹ ʿaṭasa ‘sneeze’, ʿuṭās ‘dawn’, ʿaṭūs ‘bold’: Cantineau 129; PNNR 50 ʿṭšw; HIn 424 Saf.; Hismaic LAU 32, TIJ 196, TIJ 308.

-fa. of *m* ʿ*n* ʾ*(l)* TIJ 308

-s. of ʾʿ*tl* -fa. of *qn* TIJ 196

ʿṭf ʿaṭafa ‘incline’, ʿaṭṭāf ‘a gaming arrow’, ʿāṭif ‘a she-gazelle inclining or bending her neck’: CIK 205,2 Âṭif, CIK 206,1 ʿAṭṭāf; ID 260 etc.; HIn 425 Saf.; Hismaic TIJ 151a, TIJ 287a, TIJ 292.

ʿṭft See ʿṭf, ʿāṭifah ‘a bias’: Hismaic KJC 433.

-s. of *s¹yr* KJC 433

ʿṭl ʿaṭila ‘be without ornaments’, ʿaṭal ‘denuded, unclad’, ʿaṭil ‘beautiful (a she-camel)’; Cantineau 129 ʿṭlw; PNNR 50; HIn 425 Saf.; Hismaic KJC 70*.

ʿẓ ʿaẓẓa ‘maltraiter, faire souffrir quelqu’un’, ʿaẓẓah ‘rigueurs, fureur, violence’: HIn 425 Saf.; Hismaic MU 1.

-s. of ʿd(m) -fa. of -ḍ MU 1

ʿfrw ʿafara ‘rub with dust’, ʿafrāʾ ‘white, untrodden land’: cf. CIK 143,1 ʿAffār CIK 143,2 ʿAfrāʾ; cf. WR 48 ʿAfr; HIn 426; Hismaic TIJ 137.

ʿfry See ʿfrw: HB 40 ʿAfrā fem., *el-* ʿÖfrī, *el-* ʿÖfairī fem. ‘Gazelle, Gazellchen’; HIn 426; Hismaic Rh 9a, Rh 9b*, Rh 11*, TIJ 353.

-s. of *škt* Rh 11*

ʿqrb ʿaqrab ‘scorpion’; CIK 191,2 ʿAqrab; ID 316 fem.; WR 40. Cantineau 134 ʿqrb; PNNR 54; HIn 427 Lihyn, Saf., Tham.B HU 421*, JS 342; Hismaic AMJ 147, KJA 185, KJC 254, KU 2, KWM 4, TIJ 42, TIJ 77, TIJ 243, TIJ 391, TIJ 493.

-fa. of *tʾm* KWM 4

-fa. of ʿyḏ TIJ 391

-fa. of *wh(b)lh* KJC 254

-s. of *ḥbb* TIJ 243

ʿqrbn ʿUqrubān ‘male scorpion’; CIK 574,1 ʿUqrubān; Stark 107 ʿqrbn; HIn 427 Saf.; Hismaic Meek.

-s. of *ġṯlh* Meek

ʿk ʿakka ‘be sultry, remain, stay’, ʿakk ‘sultry’; CIK 150,2 ʿAkk; ID 287 etc.; Cantineau 130 ʿkyw; HIn 428 Saf.; Hismaic KJA 283*, TIJ 20a, TIJ 184, TIJ 186, TIJ 271.

-s. of *mtʿt* TIJ 184

ʿkbr *ʿakābar* ‘male jerboa’: HIn 428 Min.; Hismaic AMJ 127.

ʿkrw *ʿakara* ‘turn, incline, return’, *ʿikr* ‘origin’, *ʿakkār* ‘one who returns to the fight after fleeing’; cf. CIK 150,2 *ʿAkkār*; HIn 428; Hismaic TIJ 316*.

ʿkl *ʿakala* ‘tie a beast’, *ʿukl* ‘base’, *ʿākil* ‘small, avaricious’: CIK 567,1 *ʿUkl*; ID 111; HIn 429 Saf.; Hismaic JS 738, KJA 138, KJB 110, KJC 169, TIJ 310.

-fa. of *ʾʿbd* KJC 169

-s. of *s¹rw* -fa. of *wrl* KJA 138

-s. of *s¹ry* -fa. of *ʾʿbd* KJB 110

-s. of *ʿn* TIJ 310

ʿkmt *ʿakama* ‘bind (goods)’, *ʿikm* ‘a burden’, *ʿakmah* ‘corner of the belly’; cf. CIK 567,1 *al-ʿUkaim*; Hismaic KJC 312.

ʿl *ʿalla* ‘give someone a drink a second time’, *ʿall* ‘a tick’, *ʿwl*, *ʿāla* ‘have, sustain a family’, *ʿawl* ‘an event that renders one anxious, food of a family’, or see *ʿly* or *ʿyl*: CIK 153,2 *ʿAll* ?, cf. CIK 567,1 *ʿUlail*; Cantineau 129 *ʿylw*, *ʿyly*; Cantineau 130 *ʿlw*; Stark 105 *ʿlʾ*; HIn 429 Saf.; Hismaic KJC 443a, KJC 597.

-s. of *nhk* KJC 597

ʿlʾl Cmpd., see *ʿly*: Cantineau 131 *ʿlyʾl*; PNNR 51; HIn 430 Lihyn, Tay. JS 378, JS 579, Tay. W Tay 17-19; Hismaic JS 602.

ʿlb *ʿalaba* ‘make a mark or impression, be hard or firm’, *ʿalb* ‘mark, impression’, *ʿalib* ‘advanced in age, hard’: cf. CIK 354,1-2 *ʿIlbāʾ*, CIK 567,1-2 *ʿUlba*; cf. ID 264 etc.; Cantineau 130 *ʿlbw*; PNNR 51; HIn 430 Saf.; Hismaic KJA 289*, KJB 108.

-s. of *s¹-* -fa. of *ḍb* KJA 289*

ʿlt See *ʿl*, *ʿillah* ‘disease, sickness’: CIK 354,1 *ʿIlla*, CIK 567,1 *ʿUlla*; ID 237; WR 62; Cantineau 131 *ʿlt*; PNNR 52; HIn 430 Saf.; Tham.C JS 134, JS 147, JS 657, WHI 102; Hismaic AMJ 76, KJA 228.

-s. of *wdd* AMJ 76, KJA 228

ʿlṭ *ʿalaṭa* ‘brand’, *ʿalṭ* ‘a brand’, *ʿilāṭ* ‘the side of the neck’: CIK 354,1 *ʿIlāṭ*, CIK 567,2 *ʿUlaiṭ*; Hismaic KJA 10, KJA 223, KJA 263, KJA 271, KJA

314, KJB 4, KJB 6, KJB 7, KJB 31, KJB 38, KJB 62, KJB 64, KJB 65, KJB 95, KJB 159, KJB 165, KJB 190, KJC 33, KJC 49, KJC 54, KJC 77a, KJC 146, KJC 457, KJC 469, KJC 625, KJC 687, KJC 708*, KJC 730*.

-fa. of *ʾs²s²* KJB 64, KJB 190

-fa. of *ʿ(l)mt°* KJC 708*

-fa. of *knn* KJA 314, KJB 65, KJC 457, KJC 687

-s. of *ʾmn* KJA 10, KJB 62

-fa. of *ʾs²s²* KJB 6

-s. of *ftḥt* KJB 95

-fa. of *knn* KJB 7

ʿlṭt See *ʿlṭ*, *ʿulṭah* 'necklace, collar': HIn 431 Lihyn; Hismaic KJB 176, KJC 113, KJC 185.

ʿlf *ʿalafa* 'feed (an animal)', *ʿilf* 'a great eater', *ʿalaf* 'fodder': CIK 354,1 *ʿIlāf*, cf. CIK 567,2 *ʿUllafa*; HIn 431 Saf.; Hismaic KJA 209.

ʿlfn See *ʿlf*: Hismaic KJB 137.

-fa. of *--k°* -s. of *s¹m* KJB 137

ʿlm *ʿalima* 'know', *ʿallam* 'very knowing': CIK 567,2 *ʿUlaim*; ID 165 etc. *Abu ʿUlaim*; WR 351; BDrN 15 *ʿAllūm*; HIn 432 Lihyn, Saf.; Tham.D ? JS 187-189; Hismaic KJC 329* (fem.).

-fa. of *břd* KJC 329*

ʿlmt See *ʿlm*, *ʿalāmah* 'impression, trace': Hismaic KJC 708*.

-s. of *ʿlṭ* -fa. of *s¹(ʿ)* KJC 708*

ʿln *ʿalana* 'become public', *ʿālin* 'overt, open' or see *ʿl* or *ʿyl*, *ʿaylān* 'male hyena': CIK 149,1 *ʿAilān*; ID 162; HIn 432 Saf.; Hismaic KJA 170*.

-fa. of *ʾrs²t* KJA 170*

ʿly *ʿalā* 'be high, lofty', *ʿaliy* 'high, elevated, lofty', *ʿalyāʾ* 'a high place'; CIK 152,1-153,2 *ʿAlī*, CIK 567,1 *ʿUlaiy*; ID 166 etc.; BDrN 15 *ʿAlī*; HB 41; Cantineau 130 *ʿly* ?, *ʿlyw*; PNNR 51; LittNE 1 24 *ʿly*; Stark 105 *ʿlʾ*, *ʿly*, Stark 106 *[ʿ]lyw*; HIn 433 Lihyn, Saf.; Hismaic KJA 35, KJC 641, TIJ 80, TIJ 334, TIJ 339, TIJ 355.

-fa. of *ʿm* KJA 35

-s. of *ʾṣfr* KJC 641

-s. of *ʿzn* TIJ 339, TIJ 355

ʿlyn See *ʿly*. *ʿilyān* ‘tall and corpulent, male hyena’ CIK 155,2 *ʿAlyān*; ID 250; BDrN 15 *ʿAlêyān*; HB 41, HIn 434 Lihyn, Saf. add JaS 58b; Hismaic AMJ 131, KJA 213, KJB 54, KJB 121 KJC 345.

-s. of *qnt* KJB 121

-s. of *n ʿmy* -s. of *rbqt* -s. of *ʿrk* -s. of *ʿbd* AMJ 131

ʿm *ʿamma* ‘become common, universal’, *ʿamm* ‘company of men’, *ʿamam* ‘perfect’, *ʿwm*, *ʿāma* ‘swim’ or see *ʿym*: CIK 166,2 *B. l- ʿAmm*, cf. CIK 580,1 *ʿUwaim*; ID 142 *Banū al- ʿAmm*, cf. ID 35 *al- ʿAwwām*; Cantineau 132 *ʿmʾ*, *ʿmw*, *ʿmʾw*, *ʿmyw*, *ʿmmw*, Cantineau 128 *ʿwmw*; PNNR 49, PNNR 52; LittNE 1 24 *ʿmmw*; HIn 434 Saf.; Hismaic AMJ 67, AMJ 125, CSP 2, JS 691*, JS 731, KJA 35, KJA 174, KJA 176, KJA 191, KJA 194, KJA 336, KJC 274, LAU 19, MNM a 1, TIJ 236, TIJ 336, TIJ 517.

-fa. of ---- -fa. of *zḥn* AMJ 67

-s. of *-hžm* KJA 176

-fa. of *ʿbdt* KJA 194

-fa. of *wtr* AMJ 125, TIJ 336

-s. of *ʾṣlḥ* -s. of *tmlh* MNM a 1

-s. of *ʾʿbd* KJC 274

-s. of *ʿbdt* -s. of *ʿm* KJA 194

-s. of *bglt* KJA 191

-s. of *gs*[1] -s. of *ʿd* TIJ 236

-s. of *s*[2]*ṣr* TIJ 517

-s. of *ʿly* KJA 35

-s. of *m ʿn* -s. of *brky* MNM a 1

ʿmʾt *ʿamiya* ‘be blind’, *ʿamāʾah* ‘error, persistence, contention’: Cantineau 132 *ʿmʾ*, *ʿmʾw*; Hismaic AMJ 41*.

-fa. of *ʿmrt* AMJ 41*

ʿmʾl Cmpd., see *ʿm*: Hismaic AMJ 32, AMJ 51, TIJ 465.

-fa. of *rb ʿ* TIJ 465

-fa. of *ʿmrt* AMJ 51

ʿmt See *ʿm* or *ʿimmīt* ‘clever, intelligent watcher’; CIK 354,2 *ʿImmīt*; Stark 106 *ʿmt*; HIn 435 add HFSL 3 fem. Saf. and read HU 261,2 = Eut 306 as Saf.; Tham.B WHI 154; Hismaic AMJ 104 (Tr.N), TIJ 379; PNNR 53.

-fa. of *wtr* TIJ 379

ʿmdn *ʿamada* ‘stay, prop’, *ʿamūd* ‘pole, column’, *ʿumuddān* ‘tall’, *ʿumdān* ‘master of a people’; cf. CIK 188,1 *ʿAmūd*; HIn 436 Saf.; Hismaic KJC 147d*.

-fa. of *bnyt* KJC 147d*

ʿmr *ʿamara* ‘dwell, live long’, *ʿamr*, *ʿumr* ‘life’, *ʿāmir* ‘living long’; CIK 156,1 *ʿAmār*, CIK 156,1-165,2 *Âmir*, CIK 166,2-167,1 *ʿAmmār*, CIK 167,1-187,2 *ʿAmr*, CIK 568,1-569,2 *ʿUmair*, CIK 570,2-571,2 *ʿUmar*; ID 56, ID 178, ID 235 etc.; BDrN 15 *ʿOmar* etc.; HB 41; Cantineau 133 *ʿmrw*, *ʿmrʾ*; PNNR 52, PNNR 53; LittNE 1 24 *ʿmyrw*, *ʿmrw*; Stark 106 *ʿmr*, *ʿmrw*, *ʿmrʾ*; HIn 436 Lihyn, Saf.; Tham.D JS 585, KTT A; Hismaic AMJ 35, CTSS 1a, JS 591, JS 727, KJC 255, KJC 267, KJC 361a, KJC 711*, KnEG 1, KnEG 4, SSA 7, TIJ 4, TIJ 48, TIJ 66, TIJ 70, TIJ 86, TIJ 106, TIJ 121, TIJ 124, TIJ 204, TIJ 207, TIJ 232, TIJ 311, TIJ 374, WAM T 10.

-fa. of *tm* JS 591

-fa. of *ḫbʾt* AMJ 35

-fa. of *zhy* TIJ 4, TIJ 48

-fa. of *ʿbds¹qlt* TIJ 204, TIJ 311

-fa. of *mklt* TIJ 66, TIJ 207

-fa. of *whblh* KJC 255, TIJ 70

-s. of *ʿbs¹* KJC 267

-s. of *ġṯ* TIJ 232

-s. of *mklt* TIJ 86, TIJ 106, TIJ 374, WAM T 10

-s. of *ns¹r* TIJ 121

ʿmrʾl Cmpd., see *ʿmr*: Cantineau 133 *ʿmrʾl*; PNNR 52; HIn 437 Saf.; Hismaic AMJ 90, KJC 400, TIJ 30, TIJ 49 + TIJ 52, TIJ 56.

-fa. of *dll* TIJ 30

-fa. of *s¹lmt* AMJ 90

-s. of *tm []* TIJ 56

-s. of *tm* -s. of *ʾmrʾl* TIJ 49 + TIJ 52

ʿmrt See *ʿmr*: CIK 165,2-166,2 *ʿAmīra*, CIK 187,2-188,2 *ʿAmra*, CIK 569,2 *ʿUmaira*, CIK 571,2-572,1 *ʿUmāra*; ID 10 etc.; Cantineau 133 *ʿmrh*, *ʿmrt*, *ʿmyrt*; PNNR 52; Stark 106 *ʿmrt*; HIn 437 Saf., Tham.D HU 568; Mixed WTI 48; Hismaic ? WHI 120; Hismaic AMJ 41, AMJ 51, LAU 27, TIJ 17a*, WA 10682.

-fa. of *r ʿm* WA 10682

-fa. of *ʿmʾl* AMJ 51

-s. of *ʿmʾt* AMJ 41

ʿmrn See *ʿmr*, *ʿumrān* 'a land well peopled': CIK 357,1-2 *ʿImrān*; ID 21 etc.; HIn 438 Saf.; Hismaic AMJ 77, KJC 427*, TIJ 166.

-s. of *ft* AMJ 77

-s. of *wḫšz°* TIJ 166

ʿmmngt Hismaic TIJ 216.

ʿmn *ʿamana* 'remain', *ʿāmin* 'settler': CIK 155,2 *ʿÂmān*; Cantineau 133 *ʿmnw*, *ʿmn*; PNNR 52; HIn 441 Saf.; Tham.C HU 149 (doubtful); Hismaic TIJ 520.

ʿmhzn Hismaic WAM T 43.

-s. of *ʾs¹lmn* WAM T 43

ʿn See *ʿnn*, *ʿānn* 'a long mountain', *ʿwn*, *ʿawāna* 'assist, help', *ʿawn* 'help', *ʿyn*, *ʿayn* 'eye': CIK 213,2 *ʿAun*; ID 305; Cantineau 128 *ʿwnw*, Cantineau 133 *ʿnw*; PNNR 49, PNNR 53; HIn 444 Lihyn, Saf., Tham.D JS 5 (doubtful); Mixed HU 2 (Tr.N); Hismaic KJB 152, KJC 399, 414, TIJ 310, TIJ 458, TIJ 462, TIJ 467.

-fa. of *ʿkl* TIJ 310

-s. of *s¹ʿd* TIJ 462, TIJ 467

ʿnʾl See *ʿwn* under *ʿn*: CIK 149,1 *ʿAinīl*; HIn 444 Saf.; Hismaic AMJ 114, KJB 63, KJC 282.

-fa. of *ʾḫʾb* KJC 282, AMJ 114

-fa. of *ġṯlh* KJB 63

ʿnb *ʿinab* ‘grapes’, *ʿannāb* ‘vendor of grapes’: CIK 190,1 *ʿAnnāb*; Stark 106 *ʿnbw*; Hismaic LAU 25.

-s. of *zdʾl* LAU 25

ʿnq *ʿaniqa* ‘be long in the neck’, *ʿunuq* ‘neck’, *ʿanāq* ‘she-kid’: Cantineau 134 *ʿnqw*; PNNR 53; HIn 445 Saf.; Hismaic KJB 13*.

ʿnl Cmpd., see *ʿnʾl*: Hismaic KJC 429.

ʿnm *ʿanam* ‘a certain tree’, *ʿainum* ‘a male frog’: cf. CIK 188,1 *ʿAnama*; HIn 445; Hismaic TIJ 516, WA 10386; PNNR 53 *ʿnmw*.

-s. of *g(ḏ)mt* TIJ 516

ʿnn *ʿanna* ‘appear, turn away’, *ʿanān* ‘clouds’: CIK 357,2 *ʿInān*, CIK 572,2 *ʿUnain*; ID 231; Stark 106 *ʿnn*, *ʿnyny*, *ʿnnw*, *ʿnny*; HIn 445 Lihyn, Saf.; Hismaic KJC 465.

ʿhd *ʿahada* ‘order, make a contract’, *ʿahid* ‘injunction, promise’: LittNE 2 235 *ʿhdw*; HIn 446 Lihyn, Saf.; Hismaic TIJ 23, WAM T 39*; PNNR 49.

-fa. of *ḫdmt* TIJ 23, WAM T 39*

ʿhl *ʿāhil* ‘sovereign’, *ʿayhal* ‘swift she-camel, excellent strong camel’: HIn 446 Saf.; Hismaic KJA 97*.

-fa. of *s¹m* KJA 97*

ʿhm HIn 446 Saf.; Hismaic SSA 22*.

ʿhn *ʿahana* ‘remain, stay, labour’, *ʿāhin* ‘lasting, enduring’, *ʿihn* ‘wool’: HIn 447 Saf.; Hismaic KJA 108, KJC 57, KJC 270.

-fa. of *ʾrs²lh* KJA 108

-s. of *tm* -fa. of *ʾs¹* KJC 270

ʿwd *ʿāda* ‘return’: HIn 447 Saf.; Hismaic JS 700*.

ʿwḏ *ʿwḏ*, *ʿāḏa* ‘seek protection’, *ʿawaḏ* ‘protection, refuge’: Cantineau 128 *ʿwydʾ*, *ʿwydw*; PNNR 49; Stark 104-5 *ʿwdw*, *ʿwyd*, *ʿwydʾ*, *ʿwydw*, *ʿwydy*; HIn 448 Lihyn, Saf.; Hismaic AMJ 147, KJB 171, KJC 502, KJC 551, MNM c 7*, Naveh TSB C, TIJ 65, TIJ 315a, TIJ 506, WAM T 42*.

-fa. of *yġṯ* TIJ 315a

-s. of *ʾlwd* TIJ 65

-s. of *ʿṣft* -fa. of *qnt* KJC 502

-s. of *ġmlt* WAM T 42*

ʿwḏlh Cmpd., see *ʿwḏ*: HIn 448 Saf.; Hismaic AMJ 83.

ʿwr *ʿawira* 'be blind in one eye', *ʿawar* 'weakness, faultiness': CIK 580,2 *ʿUwair*; ID 215, *Banū ʿUwār*; HIn 448 Saf.; Hismaic KJC 438.

-s. of *ʾmrt* -s. of *s¹lm* KJC 438

ʿy *ʿayya* 'be unable': HIn 449 Saf.; Hismaic KJC 13*.

-s. of *zdʾl* -fa. of *ḥrm* KJC 13*

ʿyḏ See *ʿwḏ*: CIK 147,2-148,1 *ʿÂʾiḏ*, CIK 360,1 *ʿIyāḏ*; ID 282; WR 245 *ʿAiyāḏ*; Cantineau 129 *ʿydw*, *ʿyd*, *ʿyydw*; PNNR 50, PNNR 51; HIn 450 Lihyn, Saf.; Hismaic JS 615, KJC 333, TIJ 169, TIJ 368, TIJ 369, TIJ 391, TIJ 399.

-fa. of *whblh* TIJ 368

-s. of *ḥrs¹* TIJ 399

-s. of *ḏʾb* KJC 333

-s. of *rġḍ* TIJ 169

-s. of *s¹ʿdlh* TIJ 369

-s. of *ʿqrb* TIJ 391

ʿyl *ʿyl*, *ʿāla* 'be poor', *ʿāʾil* 'poor': *ʿayyal* 'that inclines from side to side in gait': Cantineau 129 *ʾylw*; PNNR 51; HIn 451 Saf.; Hismaic KJA 135, KJB 103, KJC 285, KJC 571, KJ C 683, KJC 702.

ʿyln See *ʿyl*: Hismaic KJC 630.

ʿyly See *ʿyl*: Cantineau 129 *ʿyly*; PNNR 51; Hismaic AMJ 154.

-s. of *nsṯ* AMJ 154

ġtb Hismaic KJC 382*.

ġtm *ġatima* 'have a speech impediment', *ġatm* 'intense heat'; Saf. WH 116; Hismaic JS 670*, KJC 653.

ġṯ *ġaṯṯa* 'be lean or meagre', *ġwṯ*, *ġāṯa* 'aid, succour', *ġawṯ* 'cry for aid', *ġyṯ*, *ġayṯ* 'rain': CIK 274,1-2 *Ġauṯ*; ID 231 etc.; HB 43 *Ġeṯ*; Cantineau 128 *ʿwtw*, *ʿwty*; PNNR 50; Stark 105 *ʿytʾ*; HIn 452 Saf.; Hismaic HE 79, JS 24,

KJA 34, KJA 68, KJA 75, KJA 81*, KJA 182*, SSA 8, TIJ 5, TIJ 58, TIJ 220, TIJ 232, TIJ 366.

-fa. of *ʿmr* TIJ 232

-fa. of *ʿbdlh* TIJ 220

-fa. of *ġṯʾl* -fa. of *nḫr* TIJ 366

-fa. of *mqm* SSA 8

-fa. of *nbt* JS 24

-s. of *ʾdd* KJA 182*

-s. of *ʾs¹lh* TIJ 5

-s. of *zhy* KJA 34

-s. of *hʾn* HE 79

ġṯʾl Cmpd., see *ġṯ*: Cantineau 128 *ʿwtʾl*; PNNR 49; HIn 452 Saf.; Hismaic TIJ 103, TIJ 104, TIJ 143, TIJ 170, TIJ 366.

-fa. of *mqm* TIJ 103, TIJ 104, TIJ 170

-s. of *rs¹m* -fa. of *mqm* TIJ 143

-s. of *ġṯ* -fa. of *nḫr* TIJ 366

ġṯrn *ġaṯara* 'become flourishing, abundant', *ġaṯrah* 'abundance', *ġuṯrah* 'dust-colour'; Hismaic KJA 301.

ġṯlh Cmpd., see *ġṯ*. Cantineau 128 *ʿwtʾlhy*; PNNR 49 *ʿwtʾlh*, PNNR 50; Hismaic AMJ 129, KJA 24, KJB 63, Meek, TIJ 96, TIJ 441.

-fa. of *ʿgy* TIJ 96

-fa. of *ʿqrbn* Meek

-s. of *ʾs¹lh* TIJ 441

-s. of *ʿnʾl* KJB 63

ġrb *ġaraba* 'go, depart', *ġurāb* 'crow', *ġarīb* 'a stranger'; CIK 273,2 *Ġarīb*, CIK 275,2 *Ġurāb*; ID 297; BDrN 16 *Ġurāb*; HB 42 *Ġereijib*; HIn 453 Saf.; Hismaic KJA 343.

-s. of *-ʿl* KJA 343

ġrṭm *al-ġurṭumānī* 'the handsome young man': Cantineau 134 *ʿrṭmw*; PNNR 54; Hismaic KJA 83, KJA 224*, KJA 270, KJB 123, KJC 75, KJC 416.

-s. of *nht* -s. of *(ʾ)ġnt* KJA 270, KJC 75

-s. of *mqẓ* KJA 83

ġs¹m *ġasama* ‘become dark’, *ġasam* ‘darkness’: cf. Cantineau 135 *ʿšmw*; PNNR 54; HIn 455 Saf.; Hismaic KJC 178, KJC 189, KJC 434.

ġḍbt *ġaḍiba* ‘be angry’, *ġaḍab* ‘anger’, *ġaḍb* ‘intense redness’, *ġaḍbah* ‘prominent rock in a mountain’, *al-ġaḍb* ‘the lion or the bull’, *al-ġaḍūb* ‘the bull and possibly the lion’: cf. Cantineau 134 *ʿṣbw*; PNNR 53; CIK 270,1 *al-Ġaḍūba*; HIn 456 Saf.; Hismaic UR 1*.

-fa. of *ġḍbt* UR 1*

ġfrt *ġafara* ‘cover, veil’, *ġufr* ‘young mountain goat’; CIK 275,2 *Ġufra*, HIn 457 Qat.; Hismaic KJC 604.

ġlb *ġalaba* ‘overcome’, *ġallāb*, *ġālib* ‘victor, conqueror’: CIK 271,1 *B. Ġalāb* CIK 271,1-271,2 *Ġālib*; ID 16 etc.; BDrN 16 *Ġālib*; HB 43; Cantineau 130 *ʿlbw*; PNNR 51; cf. Stark 105 *ʿlbn*; HIn 457 Saf.; Hismaic KJC 365, KJC 368, KJC 395.

-s. of *s²b-* KJC 368

-s. of *s²by* KJC 395

ġlmt *ġulām* ‘young man’, *ġulmah* ‘lust’: HIn 458 Saf.; Hismaic AMJ 55.

ġm *ġamma* ‘cover’, *ġamm* ‘grief’: HIn 458 Saf. add JaS 120a; Hismaic KJC 667*.

ġmlt *ġamal* ‘fold and bury hides, put in a right state’: Hismaic WAM 42*.

-fa. of *ʿ(w)ḏ* WAM T 42*

ġn *ġanna* ‘speak with a nasal twang’, *ġunnah* ‘nasal twang’: HIn 458 Saf.; Hismaic KJA 311, RTI B*.

ġnʾ *ġannāʾ* ‘singer’: Hismaic KJA 272*.

ġnṯ *ġaniṯa* ‘drink taking breath at each draught’, *ġannāṯ* ‘homme poli, qui connâit les usages du monde et qui sait vivre’: CIK 273,2 *Ġanṯ*; HIn 458 Saf.; Hismaic AMJ 147, KJA 66, KJA 140, KJA 229, KJA 238, KJC 306*, KJC 356*, KJC 418, KJC 674*, KJC 745, KJC 748; PNNR 53 *ʿnytw*.

-s. of *ʾfṣy* -fa. of *bnt* AMJ 147

ġnm *ġanima* ‘take, obtain spoil’, *ġanam* ‘sheep goats’, *ġanīm*, *ġunm* ‘spoil’: CIK 272,1 *Ġanīm*, CIK 272,1-273,1 *Ġanm*, CIK 273,1-2 *Ġannām*; ID 270, ID 296; BDrN 16 *Ġānim* etc.; HB 43; Cantineau 133-134 *ʿnmw*; PNNR 53; Stark 106 *ʿnmw*; HIn 458 Saf.; Tham.B Eut 597*, Tham.D KTT B; Hismaic CTSS 1b, LAU 15, TIJ 228, TIJ 494*.

-s. of *ḥnl* LAU 15

ġnmt See *ġnm*, *ġanimah* ‘spoil’; HIn 458 Saf.; Hismaic KJC 459, KJC 460, KJC 477, KJC 478, KJC 479, KJC 547, TIJ 264, TIJ 293, TIJ 299.

fbr Hismaic AMJ 12*.

ft *fatta* ‘crumble something’, *fatt* ‘a fissure in a rock’, *fwt*, *fāta* ‘pass (time, opportunity)’; cf. CIK 248,2 *Futta*; Hismaic KJC 675, KJC 713.

-fa. of *s¹lm* KJC 675

-fa. of *mṣry* KJC 713

fṯḥ *fataḥa* ‘open’, *fatḥ* ‘conquest’, *fattāḥ* ‘conqueror’: Hismaic KJA 17, KJA 139*, KJA 165, KJB 172.

-s. of *gḥfl* KJB 172

-s. of *bhʾ* -s. of *ʾs¹lm* KJA 17

-s. of *nḫr* -fa. of *mṣry* KJA 139*

fṯḥt See *fṯḥ*, *futḥah* ‘opening, intervening space’: HIn 461 Saf.; Hismaic AMJ 39, KJA 111, KJB 7, KJB 95, KJB 132, KJC 307, KJC 487*, TIJ 142, TIJ 343.

-fa. of *ʾmn* -fa. of *ʿlṭ* KJB 95

-fa. of *krt* KJA 111, KJC 307

-fa. of *qrs²* KJB 132

-s. of *ʾgmʿ* TIJ 343

-s. of *ṭyq* -s. of *n(ṭ)t°* -fa. of *ʾmn* KJB 7

-s. of *ʿ* AMJ 39

ftyt *fatuwa*, *fatiya* ‘become youthful’, *fatⁿ* ‘young man’, *fatiy* ‘youthful’: CIK 248,2 *Futaiya*; HIn 262 Sab.; Hismaic KJC 39, KJC 237, KJC 444, KJC 543, KJC 635, KJC 680, KJC 690.

-s. of *ʾ-wr* KJC 680

-s. of *s²ˤn* KJC 690

fgt *fajja* ‘have the feet wide apart’, *fujjah* ‘an opening or intervening space’, *fwj*, *fāja* ‘(musk) exhaled its odour’, *fawj* ‘group of men’, *fyj*, *fāja* ‘kick with hind legs backwards’, *fayj* ‘foot messenger’; Hismaic AMJ 139.

-s. of *s²d* AMJ 139

fḥmn *faḥm* ‘charcoal’, *fāḥim* ‘black’: cf. Cantineau 136 *fḥmʾ*; cf. PNNR 55 *fḥm*, *fḥmʾ*; HIn 463 Saf.; KWM 1(Tr.N).

fẖtn *faẖata* ‘walk with a proud gait’, *faẖt* ‘the light of the moon’: Hismaic KJA 93a*, KJB 112, KJC 676b.

-s. of *s¹ ʿd* KJB 112

fẖn *faẖẖa* ‘snore’: Hismaic KJB 118.

fr *farra* ‘flee, turn aside’ *furr* ‘the best of men’, *fārr* ‘fleeing’, *fwr*, *fāra* ‘boil, ferment’, *fūr* ‘gazelles’; cf. CIK 245,2 *Farīr*; Cantineau 137 *frʾ*; PNNR 55; HIn 464; Hismaic Do XX 37,11 (fem.), KJC 513.

-d. of *n ʿmʾl* Do XX 37,11

frds¹ *furādis* ‘a man with big bones’, Syr./Pers. *fardīs* ‘paradise’: Stark 109 *prdšy*; HB 44 *Firdūs*; HIn Tham.C ? Eut 118; Hismaic KJA 326, TIJ 376.

frs¹ *farasa* ‘break, crush’, *faras* ‘horse’, *fāris* ‘the lion, horseman’: CIK 245,1 *al-Faras*, CIK 246,2 *Firās*; ID 301 *Banū Farrās*, ID 104 *al-Furas*; BDrN 16 *Fāris*; HB 44; Cantineau 137 *frsʾ*; PNNR 56; HIn 465 Lihyn, Saf.; Hismaic KJA 7.

-fa. of *ẓḥn* KJA 7

fṣ *faṣṣa* ‘remove, displace’, *faṣṣ* ‘stone that is set in a ring’, *fwṣ*, *al-mufāwaṣah* ‘being clear, perspicious’, *fyṣ*, *fāṣa* ‘shine, glisten’: HIn 468 Saf.; Tham.C JS 36*; Hismaic CTSS 1a, TIJ 312.

fṣʾl Cmpd., see *fṣ* and *fṣy*. Cantineau 137 *fṣʾl*; PNNR 55; cf. Stark 109 *pyṣʾl*; HIn 468 Saf.; Tham ? WHI 109; Hismaic TIJ 494.

fṣy *fṣy*, *faṣā* ‘separate’: Cantineau 137 *fṣyw*, *fṣy*; PNNR 55; LittNE 1 25 *fṣyw*, LittNE 2 235 *fṣyw*; Stark 109 *pṣʾ*, *pṣyʾ*; HIn 468 Lihyn, Saf.; Hismaic AMJ 148, LAU 22, TIJ 3, TIJ 8, TIJ 62, TIJ 222, TIJ 251, TIJ 406.

-fa. of *zyd* TIJ 222

-fa. of *hnʾlh* TIJ 8

-fa. of *wtr* TIJ 3

-fa. of *ynʿ* TIJ 62

-fa. of *(ʾ)s¹lb* TIJ 406

-s. of *whblh* AMJ 148

fṣyt See *fṣy*, *faṣyah* 'freedom, release': CIK 246,1 *Fāṣiya*, 247,2-248,1 *Fuṣaiya*; Hismaic KJC 225*, KJC 227, KJC 300*, KJC 450, KJC 454, KJC 690a.

fḍg *faḍīj* 'sweat': Stark 109 *pṣgw*; HIn 468 Lihyn, Saf. add JaS 62; Hismaic KJB 111, KJB 136, KJC 92, KJC 105, TIJ 300, WAM T 50.

-fa. of *mʿn* -fa. of *rms¹* -fa. of *mġṯ* TIJ 300

-s. of *nġl* KJC 92

fḍḥ *faḍaḥa* 'disgrace': HIn 468 Saf.; Hismaic AMJ 98.

fḍn *faḍḍa* 'break', *fḍw*, *fḍy faḍā* 'be wide, spacious'; *fyḍ*, *fāḍa* 'overflow, become abundant', *fayḍān* 'abundance'; Hismaic KJA 246, KJC 217.

fṭ *fūṭah* 'cloth used as waist-wrappers', *fūṭī* 'blue' ??: Hismaic AMJ 77, KJC 396.

-fa. of *ʾrs²* KJC 396

-fa. of *ʿmrn* AMJ 77

flg *falaja* 'succeed, overcome': CIK 244,2 *Fālij*; HB 45 *Fellāg*; HIn 470 Saf.; Hismaic TIJ 323, TIJ 483.

-s. of *zd* -fa. of *tmʾḥwr* TIJ 323

-s. of *grmlh* -s. of *bnl--* -fa. of *grmlh* TIJ 483

flgt See *flg*; Hismaic CSP 2.

-s. of *wtr* -s. of *ṣrm* -fa. of *tmds²r* CSP 2

flṭ *falaṭ* 'surprise', Syr. *faleṭ* 'deliver': BDrN 17 *Flêṭ*; HIn 471 Saf.; Tham.? HU 277, HU 279; Hismaic AMJ 107.

-fa. of *ʾrs²* AMJ 107

flṭt See *flṭ*: HIn 471 Saf.; Tham.B HU 277; Hismaic KJA 208, KJC 228, Ph 345 *bis* g.

-fa. of *ḥrs¹t* KJA 208

flw *flw*, *falāhu* ‘wean’, *falu*, *fulu* ‘colt, young ass’; cf. BDrN 17 *Filwa* fem.; HIn 472; Hismaic TIJ 346.

-s. of *ḫrg* TIJ 346

fnd *fanida* ‘lie, commit a mistake’, *find* ‘a great mountain’, *fanad* ‘exhorbitance in speech, error in judgement’: CIK 246,2 *al-Find*; ID 207; Hismaic KJC 4, KJC 181, KJC 283.

-s. of *ʾḫʾb* KJC 4, KJC 283

fny *faniya* ‘come to an end, vanish’; Cantineau 136 *fny* or *fnw*; PNNR 55 *fny*; HIn 472 Saf.; Hismaic LAU 35.

fht *fahiha* ‘lack, power, ability’, *fahhah* ‘forgetfulness’; Hismaic AMJ 134*.

-s. of *z*-- -fa. of *wtr* AMJ 134*

qb *qabba* ‘raise a clamour’, *qabb* ‘the greatest head or chief’, *qwb*, *qāba* ‘dig a hollow in the ground’, *qāb* ‘portion of a bow’, *qūb* ‘a young bird’; CIK 454,1 *Qabb*; Hismaic JS 730.

qbbt See *qb*, *qubāb* ‘sharp, thick nose’, *qābbah* ‘a drop of rain’: Hismaic AMJ 48.

-fa. of *gḥs*^{2} AMJ 48

qt *qatta* ‘tell lies’, *qatt* ‘fodder’: HIn 475 Saf. (doubtful); Hismaic KJA 308*.

qṯ *qaṯṯa* ‘collect, drive’: cf. CIK 473,2 *Quṯaṯ*, *Quṯṯa*; cf. ID 323; HIn 476 Saf.; Hismaic KJC 394.

-s. of *t(m)* KJC 394

qdt *qadda* ‘cut strips’, *qadd* ‘the skin of a lamb’, *qiddah* ‘party, sect’; cf. CIK 454,2 *Qadd*, CIK 469,2 *Qudād*, *Qudaid*; cf. ID 304; HIn 477 Saf.; Hismaic TIJ 136; cf. PNNR *qdd*.

qdm *qadama* ‘precede, come before’, *qadam* ‘foot’, *qadīm* ‘ancient’: CIK 454,2 *Qadam*, *Qādim*, CIK 469,2 *Qudam*; Cantineau 141 *qdmw*; PNNR 57 *qdm*, *qdmw*; HIn 478 Saf.; Tham.B HU 780; Hismaic AMJ 71, JS 672, TIJ 206, TIJ 326, TIJ 359.

-fa. of *qnt* -fa. of *hnn* TIJ 359

-s. of *rʿ* -fa. of *ḫrs*^{1} AMJ 71

qdmt See *qdm*: CIK 470,1 *Qudāms*; ID 81 etc.; HIn 478 Saf.; Hismaic KJC 147j, LAU 23*.

-s. of *ḥlʾt* -fa. of *brḥt* KJC 147j

-s. of *ẓʿn* LAU 23*

qrt *qarra* 'settle, become firm', *qirrah* 'cold', *qwr*, *qārah* 'small mountain': CIK 465,2 *al-Qāra*; ID 110; HIn 479 Lihyn, Saf.; Hismaic TIJ 450.

-fa. of *ḫnn°*TIJ 450

qrḥ *qaraḥa* 'wound', *qarḥ* 'wound', *qarāḥ* 'pure, free': Cantineau 144 *qrḥw*; PNNR 59; HIn 479 Saf.; Hismaic AMJ 112.

-fa. of *hrb* AMJ 112

qrs¹ *qarasa* 'be intensely cold', *qāris* 'intense cold': Hismaic KJA 71, KJA 87, KJA 180, KJA 288, KJC 116, KJC 117.

qrs² *qaraša* 'gain, acquire for one'Saf.; family': CIK 471,2 *Quraiš*; ID 6 etc.; cf. BDrN 17 *Qariše*; Hismaic KJB 132, KJC 695.

-s. of *krt* -s. of *ftḥt* KJB 132

qrs²m *qiršām* 'large tick': HIn 480 Saf. add JaS 110; Hismaic AMJ 34*, TIJ 275.

qrṭm *qarṭama* 'cut off, sever' *qirtam* 'seed, saffron': Hismaic JS 617.

qrʿ *qariʿa* 'be bald': cf. BDrN 17 *ʾAqraʿ*; Hismaic CTSS 2a*.

qrfz Tham.C JS 100, JS 111-113, JS 139, JS 142-144, JS 150; Hismaic KJB 179.

qs¹ *qws*, *qāsa* 'measure', *qaws* 'a bow', *qys*, *qāsa* 'measure' or see *qs¹s¹*: CIK 455,2-464,2 *Qais*, CIK 473,1 *Quss*, CIK 466,2 *Qās*; ID 113 etc; Cantineau 142 *qws*, *qs* (D.N), Cantineau 143 *qyšʾ* (D.N), *qyšw*; PNNR 58 *qys²w*; cf. Stark 110 *qwšy*; HIn 481 Saf.; Hismaic JS 607, KWM 15.

-fa. of *ʿbb* KWM 15

-s. of *wʾlt* JS 607

qs¹r *qasara* 'overcome, subdue'; CIK 467,1 *Qasr*; ID 302 *Banū al-Qasr*; Cantineau 143 *qysr* (César), cf. Cantineau 144 *qšrw*; PNNR 58; HIn 482 Saf.; Hismaic KWM 6.

-s. of *tʾm* KWM 6

qs¹s¹ *qassa* ‘seek after, pursue’: CIK 466,2 *Qasās*, CIK 467,1 *Qassās*; HIn 482; Hismaic JS 247.

-fa. of *s²gʿ* JS 247

qs¹m *qasama* ‘divide’, *qasam* ‘oath’, *qasīm* ‘fine, elegant’; CIK 466,2-467,1 *Qāsim*, CIK 473,1 *Qusam*; ID 39 etc.; Cantineau 144 *qšmʾ*; Stark 110 *qsmʾ*; BDrN 17 *Qāsim*; HB 46 *Dzāsim*; HIn 482 Saf.; Tham.B ? JS 201; Hismaic WAM T 29.

-fa. of *wṯm* WAM T 29

qs² *qaššа* ‘pick up, collect’, *qašš* ‘stubble’: CIK 473,1 *Qušš*; HIn 482; Hismaic JS 741*.

qs²ṯ[] Cantineau 144 *qs²tw*; PNNR 59; Hismaic TIJ 45*.

qʿt HIn 484 WH 3792a but read as *qʿ(ṣn)* in WH: Hismaic KJB 160*.

qm *qamma* ‘devour’, *qwm*, *qāma* ‘stand, rise’, *qawm* ‘a community’; cf. CIK 471,1 *Qumām*, *Qumāma*; Cantineau 142 *qwmw*; PNNR 57; HIn 487 Saf.: Hismaic JS 654.

qmnt *qaman* ‘fit, suitable’: HIn 488; Hismaic WAM T 7.

qn *qanna* ‘observe’, *qinn* ‘slave’, *qayn* ‘slave, blacksmith’: CIK 455,1-2 *Qain*, cf. CIK 465,1-2 *Qanān*, CIK 471,1 *Qunain*; ID 317, cf. 240; WR 371; Cantineau 142-143 *qynw*, *qynʾ*; PNNR 58 also *qyny*; LittNE 2 232 *ʾbnʾlqyny*, LittNE 2 235 *qynʾ*; RNP I 30 *Qain* as lunar deity; HIn 489 Lihyn, Saf., Tham.D JS 741; Mixed JS 596, Hismaic AMJ 101, KJA 1, KJA 31, KJA 44, KJA 49, KJA 63a, KJA 105, KJA 107, KJA 134, KJA 138*, KJA 162, KJA 184, KJA 279*, KJA 341, KJB 33*, KJB 156, KJB 174, KJC 112, KJC 672, KnEG 3, TIJ 19, TIJ 196, TIJ 270.

-fa. of *s¹r(y)* KJB 33*

-fa. of *s¹mʿn* -fa. of *ḏʾb* KJA 44, KJB 174

-fa. of *s²brmt* KJA 107, TIJ 270

-fa. of *qn* KJA 184

-fa. of *qnt* KJA 1

-fa. of *qnm* KJC 672

-s. of *ṯtmt* -fa. of *wrl* KJA 31

-s. of *ʿṭs¹* -s. of *ʾʿtl* TIJ 196

-s. of *qn* KJA 184

-s. of *ms¹kt* -fa. of *zm* KJA 341

-fa. of *s¹mʿn* -fa. of *ḏʾb* KJA 49, KJB 156

-s. of *nʿrt* KnEG 3

-s. of *wrl* -s. of *qn* -s. of *ttmt* KJA 31

-s. of *wrl* -s. of *ʿkl* -s. of *s¹rw* KJA 138*

qnt See *qn*, *qunnah* 'an isolated mountain', *qnt*, *qānit* 'devout': CIK 471,1 *Qunna*; cf. Cantineau 143 *ʾl qynt*; PNNR 58; HIn 489, Tham.C HU 593; Hismaic AMJ 18, AMJ 131, KJA 1, KJA 151, KJB 121, KJA 215, KJC 118, KJC 391, KJC 452, KJC 502, TIJ 132, TIJ 146, TIJ 262, TIJ 279, TIJ 359, TIJ 386, TIJ 450, TIJ 455, TIJ 471.

-fa. of *ʿlyn* KJB 121

-fa. of *lgḏ* TIJ 146, TIJ 455

-fa. of *mgʾ* -fa. of *ṣhbt* KJC 118

-fa. of *ngʾ* -fa. of *ʾṣlḥ* KJC 391, KJC 452

-fa. of *wʿl* KJA 215

-s. of *ḫlf* TIJ 279

-s. of *ʿwḏ* -s. of *ʿṣft* KJC 502

-s. of *qdm* -fa. of *hnn* TIJ 359

-s. of *qn* KJA 1

-s. of *nʿmy* -s. of *rbqt* -s. of *ʿrk* -s. of *ʿbd* -fa. of *ʿlyn* AMJ 131

qnʿ *qanaʿa* 'be content': CIK 471,1 *Qunaiʿ*; ID 214 *Banū Qunaiʿ*; Hismaic KJA 274*.

qnf *qanifa* 'loathe', *qanaf* 'smallness and flatness of ears', *qunāf* 'big-nosed': CIK 465,2 *Qānif*; Hismaic TIJ 365*.

-s. of *s¹ḥ(r)* TIJ 365*

qnft See *qnf*: CIK 471,1 *Qunāfa*; ID 234; HIn 490 Tham ? JS 41 ?; Hismaic KJC 472.

qnfḏ *qunfuḏ* ‘hedge-hog’: CIK 471,1 *Qunfuḏ*; ID 187 *Banū Qunfuḏ*; HIn 490 Saf.; Hismaic TIJ 58.

qnfʿ Hismaic Do XX 37, 3*.

-fa. of *z--ff* Do XX 37,3*

qnlh Cmpd., see *qn*: Saf. JaS 111; Hismaic KJA 144, KJB 143, KJC 77, KJC 258, KJC 432, KJC 637, KJC 660.

-fa. of *grmt* KJB 143

qnm *qanima* ‘be rancid, dusty’: HIn 490 Saf.; Tham.B Eut 185 (doubtful); Hismaic KJB 16*, KJB 67, KJC 672.

-s. of *qn* KJC 672

qy *qāʾa* ‘vomit’: Hismaic KJA 164.

qym See *qm*, *qāʾim* ‘conspicuous, upright’: BDrN 17 *Qāyim*; Cantineau 142 *qymw*; PNNR 58; HIn 492 Saf.; Hismaic KJC 319, KJC 664, Tdr 9.

-s. of *nṣr rḏwt* Tdr 9

qymt See *qym*: Cantineau 142 *qymt*; PNNR 58; HIn 492 Saf.; Hismaic KJA 74*, KJB 115, KJC 665, TIJ 494.

-fa. of *ḫbʾ* -fa. of *qymt* TIJ 494

-s. of *ḫbʾ* -s. of *qymt* TIJ 494

-s. of *s¹ʿd* KJB 115, KJC 665

qyml Cmpd. ?, see *qym*: Hismaic KJB 127*.

kʾt *kāʾa* ‘abstain through timidity’, *kāʾ*, *kāʾah* ‘a weak-hearted cowardly man’: Hismaic AMJ 57, 58, 59a*, KJA 265*, KJC 14, KJC 147d, KJC 265.

-s. of *gff[t]* AMJ 58

-s. of *[g]fft* -s. of *bnyt* -s. of *ʿmdn*°KJC 147d

kbr *kabīr* ‘great, large’: CIK 367,1-2 *Kabīr*; ID 32; Cantineau 105 *kbyrw*; PNNR 34; HIn 493 Saf.; Hismaic KJA 85, KJA 205*, KJC 673.

kbl *kabala* ‘fetter, put off the payment of a debt’, *kabl* ‘shackles’: HIn 494 Tham.B JS 272 (doubtful); Hismaic KJC 537.

ktbt *kataba* ‘write, draw together, sew’, *kutbah* ‘a thong with which one sews’: cf. WR 203 *al-Kātib*; Hismaic KJB 85, KJB 167.

-s. of *ḥrm* KJB 85

kḥm Hismaic TIJ 18a*, TIJ 29*.

-fa. of *rkb* TIJ 18a*

-fa. of *wtm* TIJ 29*

kr See *krr* under *krrt*, *karr* ‘a rope’, *kwr*, *kāra* ‘hasten, carry a bundle on the back’, *kawr* ‘plenty of goods, large flock’, *kūr* ‘blacksmith’s furnace, bellows, camel saddle’: Hismaic KJB 92.

-fa. of *drs¹t* KJB 92

krt See *kr* and *krrt*, *karrah* ‘return to fight’: HIn 498 Saf.; Hismaic AMJ 15*, KJA 83, KJA 90, KJA 111, KJA 181, KJA 258*, KJB 132, KJC 307, Naveh TSB C, TIJ 414.

-fa. of *ḫl* KJA 83

-fa. of *drs¹t* KJA 258*

-s. of *ftḥt* KJA 111, KJC 307

-fa. of *qrs²* KJB 132

krtm *kurtūm* ‘rocher, grosse pierre’: Hismaic KJB 104a*, TIJ 248, TIJ 335, TIJ 423, TIJ 449, TIJ 468.

-fa. of *ʿḍy* TIJ 248

krrt *karra* ‘return’, *karrār* ‘returning to the fight’: cf. CIK 370,1 *Karrār*; Hismaic KJC 174.

-fa. of *klf* KJC 174

krh *kariha* ‘dislike, loathe’: HIn 499 Saf.; Hismaic KJC 280, KJC 716a.

-s. of *wʿl* KJC 280

-s. of *ṯbr* ? KJC 716a

kzn *kazza* ‘be dry, tough’, *kazz* ‘ugly face’: Hismaic KJC 366.

kzy *kuzza* ‘become dry, tough’, *kazz* ‘dry’, *kwz*, *kāza* ‘collect’: cf. CIK 374,2 *Kūz*; cf. Cantineau 106 *kwzʾ*; PNNR 35; Hismaic KJC 398*.

ks¹ *kassa* ‘grind, have small teeth’, *kys*, *kāsa* ‘be acute, sharp’, *kays* ‘acute, sharp’: cf. ID 334 *Ibn al-Kais*: HIn 499 Saf. add JaS 87c (doubtful); Tham.B WA 907a; Hismaic KJC 15*.

ks¹by *kasab* ‘gain, acquire’, *kasāb* ‘wolf’: KJC 590*.

ks¹y *ksw*, *kasā* ‘invest (with a sword), *kasaʾa* ‘pursue’: Hismaic KJA 150.

-fa. of *ns²r* KJA 150

kʿb *kaʿaba* ‘swell (breasts)’, *kaʿʿaba* ‘fold cloth in squares’, *kaʿb* ‘joint, ankle bone’: CIK 361,1-367,1 *Kaʿb*, CIK 372,1-2 *Kuʿaib*; ID 15 etc.; Cantineau 107 *kʿbw*; PNNR 36; Stark 92 *kʿb[w]*; HIn 500 Saf.; Hismaic AMJ 50.

kʿm *kiʿam* ‘muzzle for a camel’, *kiʿm* ‘sheath’: Cantineau 107 *kʿmw*; PNNR 36; Hismaic AMJ 69, KJA 219, KJC 52*.

-s. of *s¹ʿd* -s. of *zk-* AMJ 69

klb *kaliba* ‘light-witted’, *kāliba* ‘torment’, *kalb* ‘dog’: CIK 368,1-369,1 *Kalb*, CIK 370,2-371,1 *Kilāb*, CIK 372,2-373,1 *Kulaib*; ID 13-14 etc.; WR 264; HB 47 *Tslêb*; Cantineau 107 *klbw*, *klbʾ*, *klybw*; HIn 502 Lihyn, Saf.; Tay HE 31, Tham.B WTI 21; Hismaic KJA 353.

-fa. of *ms¹kt* KJA 353

klf *kalifa* ‘be attached, addicted, devoted’, *kalaf* ‘freckle’, *kalf* ‘reddish brown’: cf. CIK 373,1 *Kulfa*; cf. ID 260; HIn 503 Saf. (doubtful); Hismaic KJC 174.

-s. of *krrt* -fa. of *ʾṯẖd* KJC 174

km *kamma* ‘cover’, *kamm* ‘quantity, amount’, *kimm* ‘calyx of a flower’, *kwm*, *kāma* ‘heap up earth, stones’, *kūm* ‘herd of camels’: Cantineau 106 *kwmy*; PNNR 35 *kmw*; HIn 504 Saf.; Hismaic KJA 232, KJA 237*, KJA 331, KJB 130, KJC 47a, KJC 229*, KWM 1, TIJ 58, TIJ 144*, TIJ 225.

-fa. of *bṣ(ṣ)* KJA 331

-fa. of *dʿbt* KJC 47a

-fa. of *s¹ʿdlh* KWM 1

-s. of *ʾs¹lm* KJA 237*

-s. of *ʾns²* KJB 130

-fa. of *tm* TIJ 144*

-s. of *gmhr* TIJ 58

-fa. of *yḏr* TIJ 225

kmʾ *kamaʾa* ‘walk barefoot’, *kamʾ* ‘truffle’: HIn 504; Hismaic TIJ 93.

-s. of *ʾmt* TIJ 93

kmʾt See *kmʾ*, *kamʾah* ‘truffles, dust colour’: Hismaic KJA 259*, KJC 609, KJC 657*.

kms¹ *kamasa* ‘be stern-looking’: Hismaic KJC 535*.

kms² *kamuša* ‘be quick, resolute, resolve’, *kamš* ‘quick’: HIn 505 Saf.; Hismaic TIJ 498.

-fa. of *ḫlṣt* TIJ 498

kmn *kamana* ‘lie, hidden’, *kamina* ‘have red eyes’, *kamīn* ‘hidden, latent’: WR 266 *Kamn*; HIn 505 Saf.; Hismaic KJA 119, KJC 259; PNNR 35 *kmnw*.

kmnt See *kmn*, *kamnah* ‘ambush’: Hismaic KJA 245.

-s. of *ṭyq* KJA 245

kmy *kmy*, *kamā* ‘conceal, put on a breast-plate and helmet’, *kamiy* ‘brave, iron-clad’: HIn 505; Hismaic KJA 132, KJC 575, TIJ 60, TIJ 417.

-fa. of *mḥwr* TIJ 60

-s. of *tmlh* KJA 132, KJC 575

knn *kanna* ‘conceal’, *kinān* ‘veil, covering’, cf. *kinānah* ‘quiver’: cf. CIK 371,1-2 *Kināna*, CIK 373,2 *Kunna*; cf. ID 18 etc.; HIn 505 Qat., Sab.; Hismaic KJA 314, KJB 7, KJB 20, KJB 65, KJB 110, KJC 38, KJC 165, KJC 175, KJC 384, KJC 406, KJC 457, KJC 553, KJC 687.

-s. of *bnʾmt* -fa. of *s¹ry* KJB 110

-s. of *ʾlṭ* KJA 314, KJB 65, KJC 457, KJC 687

-s. of *ʾmn* -s. of *ftḥt* -s. of *ṭyq* KJB 7

khf *kahf* ‘cave, shelter’: CIK 368,1 *Kahf*; HIn 506 Saf.; Hismaic JS 736*.

khl *kahl* ‘middle aged’, *kāhil* ‘withers of horse, base of the neck’: CIK 368,1 *Kāhil*, *Kahl*; ID 110, ID 111 *Kuhail*; Cantineau 106 *khylw*; PNNR 35; cf. Stark 92 *khylw* (uncertain), *khyly*; HIn 506 Lihyn, Saf., Tham.B JS 583 and as D.N, see HU 125, HU 126 etc., JS 256 etc.; Hismaic KJA 354, KJA 357, KJB 135, KJC 389, KJC 443, KJC 524, KJC 718, KJC 722, MNM c 7, TIJ 195, TIJ 287, TIJ 315, TIJ 401, TIJ 418.

-fa. of *ʾgml* TIJ 287

-fa. of *s²bṯ* TIJ 401

-fa. of *--tl* TIJ 418

-fa. of *ʾgmʿ* TIJ 195, TIJ 315

-s. of *ʿbdmk* -fa. of *ʿbdmk* MNM c 7

-s. of *s¹ny* KJB 135, KJC 389, KJC 718, KJC 722

-s. of *gtt* -s. of *hml* KJC 443

khlt See *khl*: CIK 368,1 *Kahla*; HIn 506 Saf.; Hismaic AMJ 118.

khln See *khl*, *kuhlān* 'middle aged': CIK 368,1 *Kahlān*; Cantineau 106 *khln*; PNNR 35; HIn 506 Saf.; Hismaic KWM 16, TIJ 36, TIJ 197, TIJ 352, TIJ 480a.

-fa. of *ʾs¹lh* -fa. of *ḥmlg* TIJ 36

-fa. of *ʾnmyt* KWM 16

-fa. of *s²bṯ* TIJ 197

-s. of *ṯnt* TIJ 352

-s. of *rṣṯ* TIJ 480a

kyln *kayyil* 'rubbish', *kayyūl* 'coward', *kayyāl* 'grain measurer': cf. Cantineau 106 *kylʾ* subs. 'arpenteur'; Hismaic TIJ 61.

-fa. of *ʾs¹lh* TIJ 61

lʾm *laʾama* 'suit, agree, repair', *liʾm* 'peace, equal, alike', *liʾm* 'peace, equal, alike', *laʾuma* 'be base, ignoble', *laʾīm* 'mean, ungenerous': CIK 376,2 *Lāʾm*; ID 233; cf. Cantineau 110 *lʾmt* (fem.); PNNR 36; HIn 508 Saf.; Hismaic KJC 431, KJC 501.

lb *labba* 'possess intellect, intelligence', *labib* 'a person of understanding', *lwb*, *lāba* 'be thirsty': HIn 508 Saf.; Hismaic LAU 37.

-fa. of *hẘd* LAU 37

lbʾt *labaʾa* 'milk a ewe for the first time', *labuʾah* 'lioness': cf. Cantineau 110 *lbʾ-- ʾ--*; PNNR 36; cf. CIK 374,1 *Labʾ*, CIK 375,1 *al-Labuʾ*; ID 196; HIn 508 Saf.; Tham.C JS 155, Tham.C (or Hismaic) JS 78, JS 117; Hismaic AMJ 88, KJC 701.

-s. of *nʿm* KJC 701

lbn *lubān* 'frankincense-tree', *laban* 'milk' or see *lb*: CIK 375,1 *Labn*, cf. CIK 375,1-2 *Labwān*; HIn 510; Hismaic WAM T 5*; cf. PNNR 36 *lbnt*.

-s. of *ḏẖn* WAM T 58

ltb *lataba* ‘remain fixed or settled’, *lātib* ‘being or remaining fixed’: Hismaic KJC 324*.

lṯ *laṯṯa* ‘remain, abide’, *lwṯ*, *lāṯa* ‘take refuge, twist (a turban)’, *lawaṯ* ‘langour’, *lyṯ*, *layṯ* ‘strength, the lion’: CIK 376,2 *Laiṯ*; ID 105 etc.; HIn 510 Saf.; Hismaic AMJ 79, AMJ 117, KJA 37, KJA 114, KJA 142, KJA 230, KJA 348, KJC 68, KJC 121b, KJC 147h, KJC 231, KJC 317, KJC 360, KJC 410, KJC 744.

-s. of *ʾs¹lm* AMJ 79, AMJ 117, KJA 37

lṯmt *laṯama* ‘muffle’, *laṯmah* ‘a kiss’: HIn 511 Saf., Tham.C or D JS 128 (or *lgmt*); Hismaic TIJ 6, TIJ 27.

-s. of *n--* -fa. of *ws²kt* TIJ 6

-fa. of *ws²kt* TIJ 27

lgḏ *lajaḏa* ‘graze, eat, incite’: Hismaic TIJ 455.

-s. of *qnt* TIJ 146*, TIJ 455

lgm *lajam* ‘AMJ small lizard’, *lijām* ‘a bit, bridle’ (Pers.): CIK 378,2 *Lujam*, CIK 378,2 *Lujaim*; ID 207; HIn 511 Saf.; Hismaic KJA 11, KJC 677.

lḥg *laḥija* ‘stick fast in the scabbard, cleave’, *laḥij* ‘confined, narrow place’: CIK 375,2 *Laḥj*; HIn 511 Saf.; Hismaic TIJ 192*.

-s. of *rms¹* TIJ 192*

lḥd *laḥda* ‘deviate from the right course’: HIn 511 Tham.B JS 419; Hismaic AMJ 10.

-fa. of *zẖwd* AMJ 10

lḏf HIn 514 Saf.; Hismaic KJC 260.

lʿs¹n *laʿisa* ‘have dark-red lips’: CIK 378,2 *Liʿsan*; HIn 516; Hismaic TIJ 9.

-fa. of *m---* TIJ 9

lġfn *laġifa* ‘meet, kiss’, *laġīf* ‘accomplice of thieves’; cf. ID 328 *Abū Luġāfah*; Hismaic KJB 9*.

lqḥ *laqiḥa* ‘conceive (a camel)’, *laqāḥ* ‘the thing with which a female palm-tree is pollenated’: HIn 519; Hismaic TIJ 523.

lqf *laqifa* ‘seize, take quickly’, *laqf* ‘nimble, dextrous’: HIN 519 Saf.; Hismaic TIJ 261.

-fa. of *mṯ ʿn* TIJ 261

lkt *lakka* ‘push, thrust’, *lakkah* ‘blow, punch’: HIn 520 Saf.; Hismaic TIJ 427.

lhṯ *lahiṯa* ‘thirst’, *luhāṯ* ‘heat or burning of thirst’: Hismaic KJB 30, KJC 321, KJC 750.

-s. of *ʾs¹lm* KJB 30, KJC 321, KJC 750

lhm *ilthama* ‘gulp’, *lihm* ‘aged’, *laham* ‘gluttonous, ravenous’: CIK 379,1 *Luhaim*; ID 207; HIn 521 Saf., Tham.B HU 363 = Eut 530; Hismaic KJC 578*.

lhmt See *lhm*; Hismaic KJC 770.

lws¹ *lāsa* ‘taste’, *lawās* ‘morsel for tasting’: Hismaic CTSS 1a.

mʾy Hismaic KJB 180a*.

mbrr See *brr*, *mubirr* ‘one who overcomes’: Hismaic TIJ 98*.

-fa. of *ẓ ʿl* TIJ 98*

mbʿl *baʿala* ‘marry’, *baʿl* ‘lord, owner, possessor’: Hismaic AMJ 130, KJA 188, KJA 266, KJA 295, KJA 356, KJB 31, KJB 41, KJC 74, KJC 79, KJC 120, KJC 121a, KJC 129, KJC 210, KJC 336, KJC 426, KJC 464, KJC 726, KJC 728.

-fa. of *s¹krn* AMJ 130

mtḥt *mataḥa* ‘draw water’, *mātiḥ* ‘water drawer’: Hismaic TIJ 257*.

-s. of *ʾgm* TIJ 257*

mtr *matara* ‘pull (a rope)’, *twr*, *tyr*, see under *tr*, *ʾatāra* ‘repeat’, *mutār* ‘cast or shot at repeatedly’: Hismaic KJA 84, KJA 313, KJA 332*, KJC 114, KJC 174, KJC 176, KJC 370, KJC 638, KJC 700, TIJ 83, TIJ 297.

-fa. of *brd* -fa. of *ʾnʿm* KJA 332*, KJC 638

-fa. of *bnʿmh* KJA 313

-fa. of *ḥrm* -fa. of *ʾs¹mnt* KJA 84, KJC 176, KJC 370, KJC 700, TIJ 83

-s. of *ʾṯḫd* -fa. of *brd* -fa. of *ʾnʿm* KJC 114, KJC 174

mtʿ *mataʿ* ‘become advanced (the day)’, *matāʿ* ‘anything useful or advantageous’: CIK 404,1 *Mātiʿ*, CIK 438,1 *Mutaiʿ*; HIn 526 Lihyn, Saf.; Hismaic JA 328, KJC 305*, KJC 332, TIJ 240, TIJ 253, TIJ 263, TIJ 265; cf. PNNR 42 *mtwʿʾl*.

mtʿt See *mtʿ*, *mutʿah* ‘enjoyment’: Cantineau 119 *mtʿt*; PNNR 42; HIn 526, Hismaic TIJ 26, TIJ 90, TIJ 184, TIJ 218, TIJ 320.

-fa. of *ḫrg* TIJ 26, TIJ 90

-fa. of *ʿk* TIJ 184

-fa. of *s¹ʿdʾl* TIJ 218, TIJ 320

mtn *mattana* ‘make strong’, *matn* ‘the back’, *matīn* ‘strong, firm’: cf. Cantineau 113 *mwtnw*, Cantineau 119 *mtnw*; PNNR 38 *mwtnw*; cf. Stark 98 *mtnw*, *mtny*, (*mtnʾ* which he suggests is a hypocoriston ‘Gift of N.N.’): HIn 527 Saf.; Hismaic KJA 54.

mtnʿ See *mnʿ*, *imtanaʿa* ‘abstain, refrain’ or cmpd. see *mtn*, Heb. *mattān* ‘gift’ + ʿ: cf. Cantineau 123 *bʿlmtn*; cf. PNNR 17 *bʿlmtn*, PNNR 42 *mt(n)bgy*; cf. Stark 98 *mtnʾ* etc.; HIn 527 Saf.; Hismaic KJB 26.

-s. of *ʿbd* KJB 26

mty *matā* ‘spread’: Winnett and Harding 1978: 609 quotes *Mātī* (Tab. X, 337); HIn 527 Saf.; Hismaic KJA 250, KJC 322, KJC 738, KJC 755, KWM 17, KWM 18, TIJ 10, TIJ 266, TIJ 298, TIJ 463.

-fa. of *wrb* -fa. of *s²ṣr* -fa. of *ḫrzt* TIJ 463

-s. of *rfʾy* KJA 250, KJC 322, KJC 738, KJC 755, TIJ 266, TIJ 298

-s. of *mrʾn* TIJ 10

-s. of *nʿrt* -fa. of *mʿ[n]lh* -fa. of *wḫṯ* KWM 17

mṯʿn *maṯaʿ* ‘ungraceful gait’, *maṯāʾ* ‘hyena’: cf. HB 48 *Miṯʿī*; HIn 527 Saf.; Hismaic TIJ 261.

-s. of *lqf* TIJ 261

mṯm *ṯamm* ‘repair’, *miṯamm* ‘one who pastures for him who has no pasture’: Hismaic AMJ 150*.

mgʾ *jyʾ*, *jāʾa*, inf.n. *majiʾ* ‘come, be present’, *jʾy*, *jāʾa* ‘be brown, watch over a flock, conceal’, *jaʾiya* ‘be a brownish colour’: Hismaic KJA 118, KJA 180.

-fa. of *ṣhbt* KJA 180

-s. of *qnt* -fa. of *ṣhbt* KJC 118

mgd *majada* ‘be noble, pasture in a fertile land’, *majīd*, *mājid* ‘possessing glory’; CIK 382,1-2 *Majīd*, CIK 382,2 *Mājid*, CIK 418,1 *Mujaid*, CIK 419,1 *Mujd*; ID 296; HB 48 *Māğid*; Cantineau 111 *mgdw*, *mgdʾ*, *mgdyw*, *mgydw*; PNNR 37; HIn 528 Saf.; Hismaic TIJ 17*.

mgs¹ See *gs¹*: Hismaic AMJ 62.

mgn *majana* ‘act carelessly’, *majjān* ‘the gift of a thing without price’, *mijann* ‘a shield’: CIK 406,2 *Mijann*; cf. Cantineau 112 *mgnt* fem.; cf. PNNR 37; Hismaic KJC 122a*.

mḫrt See *ḫr*, *muḫirr* ‘a man whose camels are thirsty’ or *ḫwr*, *maḫārah* ‘defficiency, shell’: HIn 530 Saf.; Hismaic AMJ 154.

-s. of *mḫrt* AMJ 154

mḫrs¹ See *ḫrs¹*: WR 321 *Muḫris*; HIn 530 Saf.; Hismaic MNM b 6, TIJ 145, TIJ 486; PNNR 38 *mḫrs²w*.

-s. of *ḫlflh* -s. of *whbn* MNM b 6

-fa. of *wʾl* TIJ 486

-s. of *whblh* TIJ 145

mḫllt *ḫalla* ‘untie, alight, stop’, *maḫall*, *maḫallah* ‘a place where a party descends’, *muḫill* ‘making one to alight or descend’: cf. CIK 407,1 *al-Miḫall*, CIK 425,2 *al-Muḫill*; ID 138; Hismaic KJA 344, KJC 470, LAU 31; cf. PNNR 38 *mḫyl*.

mḫmy *ḫamā* ‘prohibit, protect’, *al-muḫmī*, *al-maḫmiyy* epithets of the lion: cf. CIK 383,1 *Maḫmiya*; cf. ID 411; Cantineau 113 *mḫmyw*; PNNR 38; HIn 531; Hismaic JS 699.

-fa. of *whbl(h)* JS 699

mḫwr See *ḫwr*, *miḫwar* ‘wooden pin’, *muḫawwar* ‘dough’: HIn 532 Saf.; Hismaic KJA 30, KJC 202, TIJ 60.

-s. of *ʾs¹lh* -s. of *ḫrgt* -s. of *wtr* KJA 30

-s. of *(ʿ)bdʾl(ʾ)ḫwr* KJC 202

-s. of *kmy* TIJ 60

mḫr *maḫara* ‘cleave, plough, irrigate, take the best of’: HIn 532 Saf.; Hismaic KJA 94, KJA 257.

-s. of *bnʾmt* -s. of *nʿmy* KJA 94

mdʿ See *wdʿ*, *ydʿ* or from *dʿw*, *dʿy* ‘call out’, *ʾiddaʿā* ‘claim’: CIK 416,2 *Mudaʿ*; Cantineau 113 *mydʿ*; PNNR 38; HIn 534 Saf.; Hismaic 111.

-s. of *(ʾ)s¹lm* TIJ 111

mr *marra* ‘pass’, *murr* ‘bitter’, *marr* ‘time’: CIK 399,2 *Marr*, CIK 432,2-433,1 *Murr*; ID 251; cf. BDrN 18 *Marār*; HIn 536 Lihyn, Saf.; Hismaic AMJ 84*, AMJ 105, AMJ 138, KJA 33, NST 1, TIJ 338; PNNR 41 *mrw*.

mrʾ *maruʾa* ‘be wholesome (food)’, *marʾ* ‘man’, *marīʾ* ‘manly’: cf. CIK 432,1 *Muraiy*; Cantineau 118 *mrʾy*; Stark 97 *mryʾ* uncertain; HIn 536 Lihyn, Saf.; Hismaic KJC 235*, TIJ 45.

mrʾgd Cmpd., see *mrʾ* and *ʿbdgd*: Hismaic AMJ 44, TIJ 274*.

-s. of *(ḥ)rs¹* TIJ 274*

-s. of *mnʿt* -s. of *ʾfṣy* -fa. of *mnʿt* AMJ 44

mrʾʿzy Cmpd., see *mrʾ* and *ʿbdʿzy*: Saf. WH 621, WH 627, *mrʾʿzy* WH 1777, WH 3820 *mrʾhʿzy*: Hismaic AMJ 66.

-s. of *ms¹kt* AMJ 66

mrʾlh Cmpd., see *mrʾ*: cf. WR 296 *Murala*; Cantineau 64 *ʾmrʾlhy*; PNNR 13; HIn 537 Lihyn, Saf., Tham.C JS 637; Hismaic AMJ 81, AMJ 95, TIJ 24, TIJ 286, TIJ 295, TIJ 312a.

mrʾmnt Cmpd., see *mrʾ*: Hismaic KJA 32*, KJA 236.

-fa. of *mṭy* KJA 236

mrʾn See *mrʾ*: HIn 537 Saf. ISB 45 (doubtful); Hismaic TIJ 10, TIJ 163.

-fa. of *mty* TIJ 10

mrʾyġṯ Cmpd., see *mrʾ* and *yġṯ*: Cantineau 104 *ʾmrʾyʿwt*; cf. HIn 138 add Saf. JaS 50, JaS 135a Tham.B *tmyġṯ* HU 314/2 = Eut. 433, HU 480/1; Hismaic KnEG 2.

-s. of *hnʾ* KnEG 2

mrḫ *maraḫa* ‘cover (the body) with oil’, *marḫ* ‘a certain kind of tree that quickly emits fire’, *marūḫ* ‘oil which is used on the body’, *raḫḫa* ‘have much water so as to become soft (dough)’: cf. HB 48 *Mraiḫān*; Hismaic KJC 560*.

mrḫt See *mrḫ*: Hismaic AMJ 91.

mrḫmt See *rḫmt*, *ʾarḫama* ‘an ostrich or hen brooded upon her eggs to hatch them’, *murḫimah* ‘brooding on eggs to hatch them’: Hismaic JS 667.
-s. of *hʾ* JS 667

mzʿm *zaʿama* ‘assert’, *ʾazaʿama* ‘make responsible’, *mazʿam* ‘an affair in which no confidence is to be placed’: HIn 543 Saf.; Hismaic JS 716.

mzn *muzn* ‘clouds’, *māzin* ‘ants’ eggs’: CIK 405,1-406,2 *Māzin*, CIK 439,2 *Muzn*; ID 111 etc., ID 121 *Banū Māzin*; cf. HB 48 *Mizne* fem.; Cantineau 113 *mznytʾ* fem. (Tr.N); HIn 543 Saf.; Hismaic AMJ 138 (Tr.N), Do XX 37,3, (Tr.N), KJC 641 (Tr.N).

ms¹ʿd See *s¹ʿd*: CIK 401,2-403,1 *Masʿūd*; ID 6 etc.; Cantineau 118 *mšʿwdw*; PNNR 42; LittNE 1 23 *mšʿwdw*; HIn 544 Saf.; Hismaic KJB 104, KJB 131, KJC 9, KJC 91, KJC 383*, KJC 480, KJC 494*, KJC 538.
-s. of *wfṣ* KJC 480

ms¹k *masaka* ‘seize’, *masuka* ‘be tenacious’, *misk* ‘musk’; CIK 401,1 *Māsik*, CIK 409,1 *al-Misk* fem., CIK 435,2 *Musaik*; ID 246 *al-Masīk*; WR 297; Cantineau 118 *mškw*; PNNR 42; HIn 545 Lihyn, Saf.; Hismaic KJC 147i, KU 1, TIJ 135.
-s. of *ʾʿfr* -fa. of *ḥt* KJC 147i
-s. of *ʿzz* KU 1

ms¹kt See *ms¹k*: CIK 435,2 *A. Musaika*; HIn 545 Saf.; Hismaic AMJ 66*, JS 659, 759, KJA 49, KJA 341, KJA 353, KJB 156, TIJ 43, TIJ 233.
-fa. of *qn* -fa. of *zm* KJA 341
-fa. of *s¹mʿn* KJB 156
-fa. of *mrʾʿzy* AMJ 66*
-s. of *s¹ʿd* -fa. of *qn* KJA 49
-s. of *klb* KJA 353

ms¹lm See *s¹lm*: CIK 436,2-437,1 *Muslim*; ID 166 etc.; Cantineau 118, Cantineau 151 *mšlmw*; PNNR 42; Stark 97 *mšlm*; HIn 545 Saf.; Hismaic AMJ 136, KJB 47, KJB 158, KJC 522, KnEG 4, MNM b 6.
-fa. of *ʾs¹lm* -fa. of *bhʾ* KJB 47

-fa. of *ḥrs¹* KJC 522

-fa. of *ṣḥb* KJB 158

-fa. of *wtr* -fa. of *tmlh* MNM b 6

-s. of *ʾs²hl* KnEG 4

ms² *mašša* ‘quarrel with, suck a bone’; Cantineau 118 *mšw* ?; PNNR 42; HIn 546 Saf.; Hismaic KJC 413.

ms²gʿt See *s²gʿ*: CIK 403,1-2 *Mašgaʿa*; Hismaic JS 678.

mṣry *miṣr* ‘partition of boundary’, *miṣrī* ‘Egyptian’ or from *ṣry* see under *tṣr*: Cantineau 117 *mṣry*; PNNR 41; Saf. ISB 274a (doubtful); Hismaic KJA 139*, KJC 26, KJC 713.

-s. of *ft* KJC 713

-s. of *ftḥ* -s. of *nḫr* KJA 139*

mṭ *maṭṭa* ‘stretch, lengthen’: HIn 550 Lihyn, Saf.; Tham.D JS 206; Hismaic JS 622 (Tr.N).

mṭt See *mṭ*: Hismaic TIJ 519* (Tr.N).

mṭr *maṭara* ‘rain’, *maṭar* ‘rain’ or from *ṭyr*, *maṭār* ‘a place to or from which a bird flies’: CIK 404,1-2 *Maṭar*, CIK 438,2 *Muṭair*; ID 215 etc.; BDrN 18 *Maṭar* etc.; HB 48 *Muṭar* etc.; HIn 551 Saf.; Hismaic KJA 43, KJA 302*, KJA 346, WAM T 30.

-s. of *ḥkm* WAM T 30

mṭl *maṭala* ‘stretch a rope, flatten tin’, *maṭṭāl* ‘ironmonger’: HIn 551 Saf.; Hismaic AMJ 85*.

mṭy *mṭy*, *maṭā* ‘draw or pull (a well rope), hasten’; cf. CIK 404,2 *Maṭwī*; Cantineau 113 *mṭyw*; PNNR 38; HIn 551 Saf., read HE as Saf.; Hismaic KJA 69, KJA 75, KJA 236, KJB 22, KJB 24*, KJC 137, KJC 362.

-s. of *grm* -s. of *zdʾl* KJB 22

-s. of *mrʾmnt* KJA 236

mʿ *maʿy* ‘guts’, *myʿ*, *māʿa* ‘flow’: *mʿw*; Stark 95 *mʿyʾ*; Hismaic KJC 130*, RyGT 2.

-s. of *wd* RyGT 2

mʿb See *ʿb*, *maʿīb* ‘fault, defect’: HIn 551 Saf. (doubtful); KWM 19*.

m ʿd *ma ʿada* ‘snatch unawares’, *mā ʿid* ‘a wolf that tuns quickly’ or see *ʿd*, *mu ʿadd* ‘ready, prepared’, *ma ʿād* ‘place of return’: CIK 379,1 *Ma ʿadd* ?, CIK 380,2 *Ma ʿd*, CIK 410,1 *Mu ʿaid*; ID 20 etc.; Cantineau 116 *m ʿdw*; PNNR 40; HIn 552 Lihyn, Saf.; Hismaic JS 742.

m ʿz *ma ʿiza* ‘become hard’, *ma ʿz* ‘goat’: CIK 384,1 *Mā ʿiz*; cf. Stark 95 *m ʿzyn*; cf. HB 49 *Mwai ʿiz*; HIn 554 Saf.; Hismaic JS 626, JS 629, JS 632, KJB 86, KJC 145, KJC 555, TIJ 395, WAM T 4.

-fa. of *ḫm* -fa. of *ytr* WAM T 4

-fa. of *m ʿz* TIJ 395

-s. of *ʾs¹d* JS 629

-fa. of *b ʿ* JS 632

m ʿzy See *m ʿz* or *ʿzy*: BDrN 15 *Mu ʿazzī* ‘der Trauer Übr die Familien bringt’; HB 39; Hismaic AMJ 124*, KJC 729.

m ʿs¹ *ʿys*, *ʾa ʿyas* ‘of a white colour mixed with red’, *ma ʿʿās* ‘dauntless, brave’; HIn 554 Saf.; Hismaic KJC 588, TIJ 173.

-s. of *ʾdd* KJC 588

-s. of *ḏmr* TIJ 173

m ʿl See *ʿl*, *mu ʿīl* ‘a man having a family or household’, *ma ʿl* ‘agile, acute man’: HIn 555 Saf.; Hismaic KJA 13*, WAM T 36.

-s. of *(ḥ)km* WAM T 36

m ʿn See *ʿn*, *ma ʿūn* ‘aid, help’ or *ma ʿana* ‘flow (water)’, *ma ʿīn* ‘water flowing on the surface’ CIK 397,1-2 *Ma ʿn*; ID 165 etc.; Cantineau 117 *m ʿynw*, *m ʿnw*, *m ʿnʾ*; PNNR 40; Stark 96 *m ʿn*, *m ʿnʾ*, *m ʿnw*, *m ʿny*; LittNE 1 23 *m ʿnw*; HIn 556 Lihyn, Saf.; Tham.D JS 195; Hismaic AMJ 19, KJA 78, KJC 187, KJC 351*, MNM a 1*, TIJ 300.

-fa. of *s¹ ʿd* KJC 187

-s. of *brky* -s. of *ʾbs¹lm* MNM a 1*

-s. of *fḏg* -fa. of *rms¹* -fa. of *mġt* TIJ 300

m ʿnʾl See *m ʿn*: HIn 556 Saf.; Hismaic Meek (Tr.N), TIJ 181, TIJ 308*, TIJ 388, TIJ 519; PNNR 40, also *m ʿnʾlh*, PNNR 41.

-fa. of *hlm* TIJ 519

-s. of *ʿṭs¹* TIJ 308*

mʿnlh See *mʿn*: Cantineau 117 *mʿnʾlhy*, *mʿnlhy*, *mʿnlh*; HIn 557 Saf.; Hismaic KWM 18, KWM 19, TIJ 81, TIJ 168, TIJ 175, TIJ 183, TIJ 185, TIJ 199 + TIJ 201.

-fa. of *ʾtm* TIJ 183

-fa. of *s²ṣr* -fa. of *mʿnlh* -fa. of *mʿhn̊* TIJ 199 + TIJ 201

-fa. of *mʿhn* TIJ 185

-s. of *s²ṣr* -s. of *mʿnlh* -fa. of *mʿhn̊* TIJ 199 + TIJ 201

-s. of *mty* -s. of *nʿrt* -fa. of *wḥt* KWM 19

mʿhn See *ʿhn*: HIn 557 Saf.; Hismaic TIJ 185, TIJ 199 + TIJ 201*.

-s. of *mʿnlh* TIJ 185

-s. of *s²ṣr* -s. of *mʿnlh* TIJ 199 + TIJ 201*

mġṯ See *ġṯ*: *maġaṯa* ‘steep in water’, *maġiṯ* ‘wrestler’, *maġīṯ* ‘herbage laid in prostrate by rain’: CIK 420,2 *Muġīṯ*; Cantineau *mʿytw*; PNNR 40; Stark 96 *mʿytw*, *mʿyty*; HIn 558 Saf.; Hismaic KJA 196, TIJ 191, TIJ 260, TIJ 300*.

-s. of *rms¹* TIJ 260

-s. of *mʿn* -s. of *fḍg* TIJ 300*

mġny *ġaniya* ‘be free from want’, *muġn* ‘sufficing, enriching’: HIn 558 Saf.; Hismaic KJA 72*, KJB 91, KJB 70, KJB 116, KJC 303, KJC 673a, KJC 732.

-s. of *hn* KJB 70

-s. of *hwn* KJB 116

mqtl *qatala* ‘kill’, *qātala* ‘fight, combat’: CIK 431,2 *Muqātil*; HIn 560 Saf.; Hismaic Rh 6, TIJ 268, TIJ 273.

-s. of *bkr* Rh 6

-s. of *ḫl* TIJ 268, TIJ 273

mqẓ *qyẓ*, *qāẓa* ‘remain in a place during summer’, *qayẓ* ‘most vehement or intense heat’, *maqīẓ* ‘a place where people remain or abide in summer’: cf. CIK 464,2 *Qaiẓī*; cf. BDrN 17 *Qeḍān*; Hismaic KJA 83.

-s. of *ʿrb* -fa. of *ʾġnṯ* KJA 83

mqʿd *qaʿada* ‘sit’: CIK 431,1 *al-Muqʿad*: HIn 560; Hismaic WAM T 13.

mql *qalla* ‘be few, small in number’, *qwl*, *qāla* ‘say’, *maqīl* ‘resting place’: cf. Stark 96 *mqwlʾ* (doubtful); Hismaic JS 593; PNNR 41 *mqlw*.

mqm See *qm*: *ʾaqāma* ‘set up’, *miqamm* ‘voracious’: Cantineau 142 *mqwmw, mqymw*; PNNR 41; Stark 96 *mqym*, *mqymw*, *mqymy*, *mqmw*; HIn 560 Saf., Tham ? HU 28 = Eut 32, HU 60 = Eut 75, HU 64* = Eut 69; Hismaic Meek, SSA 6, SSA 8, TIJ 53, TIJ 59, TIJ 103, TIJ 104, TIJ 143, TIJ 170, TIJ 429.

-fa. of *tm* TIJ 429

-s. of *ġṯ* SSA 8

-s. of *ġṯʾl* TIJ 103, TIJ 104, TIJ 170

-s. of *rs¹m* TIJ 143

mqmʾl Cmpd., see *mqm*: Cantineau 142 *mqymʾl*, *mqmʾl*; PNNR 41; HIn 560 Saf.; Hismaic KJB 133.

-s. of *s¹r* KJB 133

mqn See *qn*: CIK 398,1 *Māqān*; Stark 96 *mqynʾ*; HIn 560 Saf.; Hismaic TIJ 241.

mkr *makara* ‘beguile, circumvent’, *makr* ‘artifice, craft’, *mākir* ‘deceiver’: HIn 561 Saf.; Hismaic CTSS 1a.

-s. of *rs²ºʾt* CTSS 1a

mkrt See *mkr*, *makrah* ‘craft, stratagem’: Hismaic SSA 10*.

mks¹ *makasa* ‘diminish, deduct from a thing’, *kws*, *ʾakāsa* ‘prostrate o.s.’, *kys*, *ʾakāsa* ‘beget sagacious children’: Hismaic KJA 4.

mklt *makala* ‘hold little water and much slime (a well)’, *maklah* ‘slime in a well’, *kalla* ‘become tired’, or see *kyl* under *kyln*: HIn 561 Saf.; Hismaic TIJ 66, TIJ 86, TIJ 106, TIJ 207, TIJ 226, TIJ 374, WAM T 10.

-fa. of *ʿmr* TIJ 86, TIJ 106, TIJ 374, WAM T 10

-s. of *ʿmr* TIJ 66, TIJ 207

ml See *mll*, *mall* ‘wearied’, *mwl*, *māla* ‘be rich in flocks’, *māl* ‘flocks, wealth’, *mayl* ‘sympathy’: CIK 397,1 *Mall*, cf. Cantineau 114 *mly*; HIn

562 Saf.; cf. Stark 95 *ml*, *mlʾ*, *mly*; Hismaic Do XXVI 49,5 KJC 569*, KJC 753*.

mlʾm See *lʾm*, *mulāʾim* ‘becoming, convenient, fit’: HIn 562 Saf.; Hismaic JS 745.

-s. of *s²mt* JS 745

mlgn See *mlj* under *ʾmlg*, *muluj* ‘sucking kids’, *maljān* ‘a man who sucks teats of goats from greed’, *malīj* ‘foster brother, illustrious man’, *lajana* ‘stop, adhere to’: cf. HB 49 *Meliğ*; Hismaic KJC 8, KJC 273, KJC 760, KJC 762.

mlgnt See *mlgn*: Hismaic KJC 44.

mlḥ *malaḥa* ‘be salty’, *maluḥa* ‘become beautiful’, *milḥ* ‘salt, knowledge, beauty’: CIK 384,1 *Malīḥ*, CIK 397,1 *Mallaḥ*, CIK 427,1-2 *Mulaiḥ*; ID 276; BDrN 18 *Mallūḥ*; HB 49; Cantineau 114 *mlḥw* fem.; PNNR 39; HIn 563 Lihyn, Saf.; Hismaic Naveh TSB C, TIJ 177.

mlk *malaka* ‘possess, own’, *malik* ‘king’: CIK 384-397,1, CIK 427,2 *Mulaik*; ID 17 etc.; BDrN 18 *Mallāk*; HB 49 *Mālek*; Cantineau 114-115 *mlk*, *mlkw*, *mlkyw*; PNNR 39; LittNE 2 234 *mlkw*; Stark 95 *mlk*; HIn 564-565 Lihyn, Saf., Tham.D HU 698, HU 700; Mixed WTI 31, WTI 47; Hismaic KJA 189*, KJA 305, KJA 309, TIJ 47, TIJ 215, TIJ 237, TIJ 453, WAM T 26.

-fa. of *ʾnʿm* KJA 189*, KJA 305, KJA 309

-fa. of *ḫylʿ* WAM T 26

-s. of *b(k)r* TIJ 215, TIJ 237, TIJ 453

-s. of *s¹ʿdt* TIJ 47

mlkʾl Cmpd., see *mlk*: Stark 95 *mlkʾl*; HIn 565 Saf.; Hismaic TIJ 481*; PNNR 39 *mlkʾltw*.

-s. of *mʿ-* -fa. of *ʾnʿm* TIJ 481*

mlkt See *mlk*, *malikah* ‘queen’, *malkah* ‘property’: CIK 427,2 *Mulaika*; Cantineau 115 *mlykt*; PNNR 39; Stark 95 *mlkt*; HIn 565 Saf., Tham.B JS 262; Hismaic TIJ 494, TIJ 505, TIJ 507.

-fa. of *ʿḏ* TIJ 507

-s. of *ʾs¹* -fa. of *bs²mn* TIJ 505

mlky See *mlk*: HIn 566; Hismaic NST 1; PNNR 39 *mlkyw*.

mll *malla* ‘be tedious, put bread etc. into embers’: CIK 427,2 *Mulail*; ID 260; HIn 566 Saf.; Hismaic AMJ 24.

mly *maliy* ‘long, prolonged’: Cantineau 114 *mly*; PNNR 39; HIn 566 Saf.; Hismaic KJC 436a*.

mmy Hismaic JS 747.

mn *manna* ‘confer, bestow’; cf. Cantineau 115-116 *mnw* ?; PNNR 39 *mnw*; HIn 567 Saf.; Hismaic KJA 240, KJC 659.

mnbk *nabakah* ‘hill with a peak’: Hismaic JS 713*.

mnʿ *manaʿa* ‘prevent, protect’, *manīʿ* ‘unapproachable, inaccessible’: CIK 398,1 *Manīʿ*; Cantineau 116 *mnʿ*; PNNR 40; HIn 568 Saf.; Hismaic AMJ 148, KJC 731*.

mnʿt See *mnʿ*: CIK 398,1 *Manʿa*; WR 286, WR 287; Cantineau 116 *mnʿwt*, *mnʿt* (fem); PNNR 39, PNNR 40; HIn 569 Saf., Tham.C JS 136; Mixed HU 683; Hismaic AMJ 44, TIJ 18d, TIJ 45.

-s. of *ʾfṣy* -fa. of *mrʾgd* -fa. of *mnʿt* AMJ 44

-s. of *mrʾgd* -s. of *mnʿt* -s. of *ʾfṣy* AMJ 44

mnʿs¹ *naʿasa* ‘drowse, dose’: Hismaic KJA 166a*.

mnh See *mn* ?: Cantineau 115 *mnh* inachevé; Hismaic KJA 92.

mny *manā* ‘determine upon’, *māna* ‘reward’, *man*^{an} ‘fate’: HIn 570 Saf.; Tham. ? HU 119; Hismaic MNM b 6 (Tr.N); PNNR 39 *mny*.

mhṣ *mahaṣa* ‘wash a garment’, *haṣṣa* ‘crush, tread under foot’, *hāṣa* ‘mute a bird, break s.o’s neck’; Hismaic KJA 19, KJA 21, KJA 46, KJA 59*, KJA 128, KJC 29, KJC 58*, KJC 686*.

-fa. of *grf* KJA 21, KJA 46

-fa. of *ḥg* KJA 128, KJC 686*

-s. of *ʾs¹y* -fa. of *ʿrhz* KJC 29

mhd *mahada* ‘make a place smooth’, *mahd* ‘place made smooth for a child to sleep in’, *muhd* ‘elevated or depressed ground’, *mahīd* ‘pure butter’: cf. CIK 282,2 *Mahdī*; HIn 571 Saf.; Hismaic AMJ 59*.

mwtl Hismaic JS 720*.

mys¹ — *māsa* ‘walk with an elegant gait’, *mayyās* ‘one who walks with an elegant gait’; CIK 384, 1 *Maiyās*; ID 213 *Mayyās*; Cantineau 113 *m[y]š[w]*; Stark 94 *myšʾ*; HIn 576 Saf.; Hismaic MNM c 7.

nʾlt — *naʾla* ‘walk with a jerking deportment’: CIK 444,1 *Nāʾila* fem.; HIn 578 Saf. (doubtful); Hismaic CTSS 3 (Tr.N).

nbt — *nabata* ‘grow, sprout’, *nabt* ‘plant’: CIK 440,1 *Nabīt*, *Nābit*, *Nabt*; ID 218; HIn 578 Saf.; Hismaic JS 24, LAU 12, TIJ 303, TIJ 305, TIJ 332, TIJ 396, WAM T 46.

-fa. of *ytr* LAU 12, TIJ 303, TIJ 305, TIJ 332, TIJ 396, WAM T 46

-s. of *ġṯ* JS 24

nbty — See *nbt*: Hismaic LAU 3.

nbr — *nabara* ‘raise the voice’, *nibr* ‘tick, granary’, *nabr* ‘shameless’: HIn 578 Saf.; Hismaic KJC 193*.

nbṣlh — Cmpd., *nabaṣa* ‘speak’, *nabṣah* ‘word’: Hismaic KJB 76*, see the commentary to the text.

nbṭ — *nabaṭa* ‘well or issue forth’, *nabaṭ* ‘the first water that appears when a well is dug’: CIK 439,1 *Nabaṭī*, CIK 449,1 *Nubaiṭ*; ID 207; WR 337; Cantineau 119 *nbṭw*; PNNR 43; HIn 579 Saf.; Hismaic KJA 138.

-fa. of *bns²br*, KJA 138

nbh — *nabuha* ‘be eminent, well-known’, *nabīh* ‘eminent, well-known’: cf. CIK 439,2 *Nabhān*; ID 78 *Nubaih*; WR 330 *Nabīh*; Cantineau 119 *nbhw*; PNNR 42; HIn 580; Hismaic JaS 1.

-s. of *ʾs¹ʾl* JaS 1

ngʾ — *najaʾa* ‘affect by an evil eye’, *najuʾ (al-ʿayn)* ‘evil-eyed’ or see *ngy*: HIn 581 Saf.; Hismaic KJA 152*, KJB 175, KJC 391, KJC 452.

-fa. of *ʾs¹lh* KJA 152*

-fa. of *s¹ʿd* KJB 175

-s. of *qnt* -fa. of *ʾs¹lḥ* KJC 391, KJC 452

ngʾt — See *ngʾ*, *najāʾah* ‘an affecting with an evil or malignant eye’: HIn 581 Saf.; Hismaic AMJ 116, KJB 129*, KJB 142.

-fa. of *s¹ʿdn* AMJ 116

ngt *najja* ‘hasten’: Hismaic TIJ 302*.

-fa. of *ṣmy* -fa. of *b-q* TIJ 302*

ngḥ *najaḥa* ‘succeed’, *nujḥ*, *najāḥ* ‘success’: CIK 450,1 *Nujaiḥ*, *Nujaiyiḥ*; Hismaic TIJ 360, TIJ 384, WAM T 52.

ngr *najara* ‘hew, fashion wood’, *najjār* ‘carpenter’: CIK 442,1 *an-Najjār*; HIn 581 Saf.; Hismaic AMJ 87, Rh 3*.

ngf *najafa* ‘fashion (an arrow)’, ‘cut (a tree) at the root’, *najīf* ‘broad-headed (spear)’: HIn 582 Saf.; Hismaic KJC 402*.

ngl *najala* ‘be verdant, beget’, *najila* ‘have wide eyes’, *najl* ‘child’: cf. CIK 442,2 *B. Najlān*; cf. ID 312; HB 49 *Neğlā* fem.; HIn 582 Saf.; Hismaic KJA 9, KJA 89, TIJ 422.

-s. of *ʾʿ* TIJ 422

ngm *najm* ‘star’: CIK 442,2 *Najm*; ID 83; WR 333; Cantineau 120 *ngmw*; PNNR 43; Stark 98-99 *ngmw*; HIn 582 Saf.; Hismaic AMJ 103, AMJ 135.

-s. of *ʾs¹lh* AMJ 103

-fa. of *s¹ʿd* -fa. of *s²kmlh* AMJ 135

ngy *ngy*, *najā* ‘escape’, *nājʾⁱⁿ* ‘swift’: CIK 442,1 *Nājī*; ID 163; HB 49 *Nāğī*; HIn 582 Saf.; Hismaic AMJ 26*.

-fa. of *ḍbʿt* AMJ 26*

ngyt See *ngy*: CIK 442,1-2 *Nājiya*; ID 147 etc.; WR 333; HIn 582 Saf.; Hismaic KWM 14.

-s. of *ḥmly* KWM 14

nḥl *naḥila* ‘become emaciated’, *naḥala* ‘give something freely’, *naḥal* ‘bees, gift’, *nāḥil* ‘lean’: HB 49 *(ibn) Nāḥil*; HIn 583; Hismaic TIJ 402*.

-fa. of *grs²ʿ* TIJ 402*

nḫr *naḫara* ‘snore’: CIK 444,1 *an-Naḫḫār*; Stark 99 *nḥwr*; HIn 583 Saf.; Hismaic KJA 139, TIJ 125, TIJ 366.

-fa. of *ftḥ* KJA 139

-s. of *ġṯʾl* -s. of *ġṯ* TIJ 366

nḫy *nḫw*, *nuḫiya* ‘boast’, *nuḫwah* ‘pride’: cf. Stark 99 *nḥy*; Hismaic KJC 126.

-fa. of *s¹dn* -fa. of *ʾmn* KJC 126

ndt *nadda* ‘take fright, shy’ *nidd* ‘the like, opponent’: Hismaic WAM T 41.

ndm *nadima* ‘grieve, regret’, *nādim* ‘contrite, repenting’, *nadīm* ‘a companion in drinking’: HIn 584 Saf.; Hismaic WAM T 16*.

-s. of *bndm*˚WAM T 16*

nr *nār* ‘fire’, *nawr* ‘blossoms’, *nūr* ‘light’: CIK 445,1 *an-Nār*, ID 206 *Banū al-Nār*; BDrN 19 *Nūr*; HIn 585 Saf.; Hismaic KJC 621, TIJ 224, TIJ 392.

-fa. of *tm* TIJ 224

-s. of *rh(?)* -s. of *hnʾt* TIJ 392

nrt See *nr*, *nūrah* ‘brand’: Hismaic KJC 184.

nrn See *nr*, *nīrān* ‘fires’: BDrN 19 *Nūrān*; HIn 585 Lihyn, Saf., Tay. JS 430; Hismaic TIJ 375.

ns¹ *nws*, *nāsa* ‘dangle’, *nās* ‘men’, *nassa* ‘urge, go at a gentle pace, go to water’: CIK 445,1 *an-Nās*; HIn 586 Saf.; Hismaic TIJ 161; PNNR 44 *nšw*.

-s. of *dgg* -s. of *tkm* TIJ 161

ns¹ʾ *nasaʾa* ‘chide, urge’, *nasāʾ* ‘length of life’, *nasiyʾ* ‘postponed month’: HIn 586 Saf.; Hismaic JS 595, WAM T 32; PNNR 44 *nšʾ*.

-s. of *ʾdnt* -s. of *(w)--kyt* JS 595

-s. of *dgg* -s. of *tkm* WAM T 32

ns¹t Hismaic AMJ 154*.

ns¹r *nasr* ‘vulture, (sometimes eagle)’: CIK 445,1 *Nasr*, CIK 453,2 *an-Nusair*; WR 336; HIn 586-587 Saf., Tham.D WTI 6; Hismaic Meek, TIJ 121.

-fa. of *ʿmr* TIJ 121

ns¹k *nasaka* ‘worship’, *nasīk* ‘gold or silver ingot’, *nāsik* ‘pious’: HIn 587 Saf.; Hismaic MNM c 7.

ns¹q *nassaqa* ‘set in order’: MNM c 7*.

ns² See *ns²s²*: cf. HB 50 *Nāšī*; cf. Stark 100 *nšʾ*; Hismaic KJA 342; PNNR 44 *nšw*.

ns²g *našaja* ‘sob, bray’, *našaj* ‘stream of water’: Cantineau 122 *nšgw*, *nšygw*; PNNR 44, PNNR 45; LittNE 1 23 *nšygw*; Hismaic AMJ 21.

ns²r *našara* ‘spread out’, *nāšir* ‘spreading out’: CIK 445,2 *Nāšir*; cf. Stark 100 *nšry*; HIn 588 Saf.; Hismaic KJA 150, KJC 291.

-s. of *fl-* -fa. of *bẓry* KJC 291

-s. of *ks¹y* -fa. of *yb* KJA 150

ns²s² *našša* ‘gurgle, ferment’, *naššāš* ‘a tract of salt land’: Hismaic WAM T 44.

-s. of *ʾkrʿ*WAM T 44

ns²l *našala* ‘carry off and devour a piece of meat’, *naššāl* ‘pilferer’: Cantineau 122 *nšlw*; PNNR 45; HIn 589 Saf.; Tay. JS 563a; Hismaic KJB 147, KJC 620, MNM b 5, TIJ 421, TIJ 475.

-fa. of *y ʿmr* MNM b 5

-s. of *zrt* -s. of *nw(y)* KJC 620

-s. of *ṣ---* -s. of *ʾlfʾl* TIJ 421

nṣt *naṣṣa* ‘raise, show’, *naṣṣah* ‘female sparrow’, *nuṣṣah* ‘forelock of hair’, *nāṣa* ‘lag behind’, *nawṣ* ‘wild ass’: cf. CIK 447,2 *Nauṣ*; Hismaic AMJ 128.

-s. of *sᵗʂmn* AMJ 128

nṣr *naṣara* ‘aid, assist’, *naṣr* ‘aid’, *nāṣir* ‘helper’: CIK 445,2-446 *Naṣr*; ID 100 etc. *Nuṣair*; WR 331; BDrN 19 *Naṣr*; HB 50 *N̊ṣair* etc.; Cantineau 122 *nṣrw*; PNNR 44; Stark 100 *nṣwr*, *nṣrʾ*; HIn 590 Saf., Tay. W Tay. 3, Tay. W Tay 31; Hismaic KJC 214, Tdr 9.

-s. of *rḏwt* -s. of *qym* -s. of *nṣr* Tdr 9

nṣrlh See *nṣr*; Cantineau 122 *nṣrʾlhy*; PNNR 44; Hismaic AMJ 148, KJC 468.

nṣlt *naṣl* ‘a iron head or blade’: HIn 591; Hismaic KJA 22, KJA 29a, KJA 136.

nṭt *naṭṭa* ‘dote, jump’, *naṭṭ* ‘leap, bound’: Hismaic KJB 7*.

-fa. of *ṭyq* KJB 7*

n ʿrt *na ʿara* ‘call out’, *na ʿrah* ‘a sound in the nose’, *na ʿira* ‘be harrassed by flies’, *na ʿir* ‘restless’: Cantineau 121 *n ʿrt*; PNNR 44; cf. ID 327 *al-Na ʿir*; HIn 593 Saf. add JaS 131; Hismaic KnEG 3, KWM 18.

-fa. of *qn* KnEG 3

-fa. of *mty* -fa. of *m ʿ[n]lh* -fa. of *wḥṯ* KWM 18

n ʿm *na ʿima* ‘be plentiful and easy (life)’: CIK 439,1 *Na ʿām*, CIK 444,1 *Nā ʿim*, CIK 448,2-449,1 *Nu ʿaim*, CIK 450,1 *Nu ʿm*; ID 85 etc.; BDrN 19 *Nu ʿêm*;

Stark 99 *nʿym*, Stark 99-100 *nʿm*; HIn 593-4 Lihyn, Saf.; Hismaic JS 229, JS 680*, KJA 282*, KJC 701; PNNR 44 *nʿm*.

-fa. of *lbʾt* KJC 701

nʿmʾl Cmpd., see *nʿm*: HIn 594 Saf.; Hismaic Do XX 37,11.

-fa. of *fr* Do XX 37,11

nʿmy See *nʿm*, *naʿmāʾ* 'benefaction, favour': Stark 100 *nʿmy*; HIn 595 Saf.; Hismaic AMJ 131, KJA 94.

-fa. of *bnʾmt* KJA 94

-s. of *rbqt* -s. of *ʿrk* -s. of *ʿbd* -fa. of *qnt* -fa. of *ʿlyn* AMJ 131

nġl *naġala* 'be spoilt in tanning (a hide)', *naġula* 'be spurious (a child)', *naġl* 'an illegitimate child': cf. Cantineau 121 *nʿlw*; PNNR 44; Hismaic KJC 92.

-fa. of *fḍg* KJC 92

nqṭṣ cf. Cantineau 122; PNNR 44; Milik 1976: 150 *nqṭys*, Gk. Νικήτιος; see Macdonald 1992: 158; Hismaic KJC 28*.

nkf *nakafa* 'abstain from', *nākif* 'weak': HIn 599 Saf.; Hismaic KJB 183.

nmr *namira* 'be angry', *namir* 'leopard': CIK 444,2-445,1 *Namir*, CIK 450,2 *Numair*; ID 113 etc.; WR 335; Cantineau 120-121 *nmrw*, *nmrʾ*; PNNR 43; LittNE 1 23 *nmrw* ?; HIn 599 Saf.; Hismaic JS 596 (Tr.N), KJA 243, KJC 286, TIJ 205, TIJ 278.

-s. of *tmlh* -s. of *dql* TIJ 278

nms[1] *namasa* 'conceal', *nims* 'ferret', *nāmūs* 'secret, mosquito': HB 51 *Nômes*: HIn 600 Saf., Tay. W Tay 28; Hismaic KJB 50.

nn *nūn* 'fish': cf. Cantineau 121 *nny*, *nnyt* ?; PNNR 44; cf. Stark 99 *nnʾ*; HIn 601 Saf.; Hismaic TIJ 506.

nhb *nahaba* 'take spoil', *nahb* 'spoil, booty': BDrN 19 *Nahāb*; HIn 601 Saf.; Hismaic KJA 42, KJA 45, KJA 96.

nhbn See *nhb*: HIn 601; Hismaic TIJ 363, TIJ 461.

-s. of *ws*[1]*ṭ* -s. of *hrb* TIJ 461

nht *nahata* ‘cry out, roar’, *al-nahāt* ‘lion’: HIn 601 Saf.; Hismaic KJA 29, KJA 83, KJA 202*, KJA 231, KJA 270, KJC 75, KJC 508.

-fa. of *tmʾl* KJA 202*

-fa. of *bgt* KJC 508

-fa. of *ḫḏmn* KJA 231

-s. of *(ʾ)ġnt* -fa. of *ġrṭm* KJA 83, KJA 270, KJC 75

nhr *nahr* ‘river’, *nahir* ‘much (water)’, *nahār* ‘day-time’: CIK 442,2-443,1 *Nahār*; WR 333; BDrN 19 *Nahār*; HB 51; Stark 99 *nhrʾ*; HIn 601 Saf.; Hismaic TIJ 518.

-s. of *mḥ--* TIJ 518

nhq *nahaqa* ‘bray’, *nahq* ‘wild rocket’; Hismaic AMJ 120, AMJ 140.

-fa. of *s¹lm* AMJ 140

-s. of *ʾrs²lh* -fa. of *ʾrs²lh* AMJ 120

nhk *nahuka* ‘be brave’, *nahīk* ‘energetic, brave’: CIK 443,1-443,2 *Nahīk*; ID 128; WR 334; HIn 602 Saf.; ; Hismaic KJC 597*, TIJ 84.

-fa. of *ʿl* KJC 597*

-fa. of *whbʾl* TIJ 84

nhl *nahal* ‘first drink’, *nāhil* ‘thirsty’: CIK 443,2 *Nāhil*; Hismaic KJC 463*.

nhm *nahima* ‘be greedy’, *nahama* ‘chide, road, sigh’, *nuhām* ‘owl’: CIK 448,1 *Nihm*, CIK 450,1 *Nuham*; ID 257 *Banū Nihm*; WR 337; HIn 602 Saf.; Tham. AMJ 109.

-s. of *dql* AMJ 109

nwy *nwy*, *nawā* ‘intend, go off’, *nawiy* ‘sympathetic friend’: ID 292 *Banū Nawā*; HIn 604 Saf.; Hismaic KJC 620*.

-fa. of *zrt* KJC 620*

nyrt *nyr*, *nāra* ‘border (cloth), weave’; HIn 604; Hismaic TIJ 158.

hʾ Hismaic JS 667.

-fa. of *mrḫmt* JS 667

hʾmy cf. HIn 78 Saf. *ʾmy*; Hismaic TIJ 408*.

-s. of *zr* TIJ 408*

hʾn Hismaic HE 79.

-fa. of *ġṯ* HE 79

hbṯ *habaṯa* ‘squander (property)’: Hismaic KJA 121.

htm *hatama* ‘break the front teeth’: CIK 287,2 *Hutaim*; BDrN 19 *Htêmi*; HIn 608 Saf.; Hismaic KJC 422*.

hg *hajja* ‘burn fiercely (fire), be sunken in its socket (eye), emigrate’, *hawija* ‘be tall and foolish’: cf. BDrN 19 *Haǧǧāǧ*; cf. HB 51; Cantineau 84 *hgw*; PNNR 21; Stark 84 *hgy* uncertain; HIn 608 Saf.; Hismaic KJC 676.

hgn See *hg*, *hajana* ‘be base-born’, *hajīn* ‘one whose father is free and whose mother is a slave’, *hijān* ‘of a good breed (a camel)’: CIK 286,2 *al-Hugn*; HIn 609; Hismaic KJB 157.

hd *hadda* ‘demolish (a building), crash, crumble down’, *hadd* ‘strong, weak, generous man’ or see *hwd*: HIn 610 Saf.; Hismaic KJC 170, KJC 471, KJC 539.

-s. of *s¹m ʿn* KJC 539

hdd See *hd*: CIK 276,1 *al-Hadād*, *Haddād*, CIK 285,2 *Hudaid*; ID 249, ID 284-285; HIn 611 Saf.; Hismaic TIJ 351.

-s. of *ʿṯ* TIJ 351

hḏr *haḏara* ‘babble, talk nonsense’, *haḏir* ‘garrulous’: cf. Cantineau 84 *hdyrt*; cf. PNNR 22; cf. Stark 84 *hdyrʾ*; HIn 612 Saf.; Hismaic KJA 56, KJC 7.

-fa. of *wʾl* KJC 7

hr See *hrr* or *hwr*, *hāra* ‘pull down, fall to pieces’, *hār* ‘weak, feeble’, *hawr* ‘lake, flock of sheep’: CIK 284,1 *Hirr*; WR 227; cf. BDrN 19 *Haurī*; HIn 612 Saf.; Hismaic KJC 352, TIJ 491.

-s. of *s¹ ʿdlh* TIJ 491

hrb *haraba* ‘flee, run away’: CIK 280,1 *Harrāb*; WR 214; HIn 612 Saf.; Tham.B HE 38; Hismaic AMJ 112, TIJ 138, TIJ 330, TIJ 381, TIJ 461, TIJ 470.

-fa. of *--ḥ* TIJ 138

-fa. of *bṭl* TIJ 470

-s. of *dḥlt* -fa. of *ws¹ṭ* TIJ 330

-s. of *hrr* -fa. of *ws¹ṭ* TIJ 381

-fa. of *ws¹ṭ* -fa. of *nhbn* TIJ 461

-s. of *qrḥ˚*AMJ 112

hrt See *hrr* or *harata* ‘rent, slit’, *harīt* ‘wide, ample’, *harit* ‘lion’: HIn 613 Saf.; Hismaic TIJ 357.

-s. of *s¹nm* TIJ 357

hrr *harra* ‘snarl (a dog), be disgusted’, *hirr* ‘male cat’: cf. CIK 287,1 *A. Huraira*; cf. ID 295; WR 206 *Harīr*; HIn 613 Saf.; Hismaic TIJ 381.

-fa. of *hrb* -fa. of *ws¹ṭ* TIJ 381

hrkld cf. Stark 85 *hrqlydʾ* Gk. Ἡρακλείδης, Preisigke 1922: 122-23; Hismaic WAM T 60.

hs¹ *hassa* ‘crumble something, speak to oneself’, *hws*, *hāsa* ‘smash, eat voraciously’, *hawisa* ‘be light-headed’: Hin 615 Saf.; Hismaic KJA 218*.

hs¹r See *s¹r*: HIn 615 Saf.; Hismaic TIJ 154.

hʿtl *ʿatala* ‘draw, drag along violently’, *ʿatal* ‘a man who hastens or is quick to do mischief’, *ʿutul* ‘gross, coarse, rude’: HIn 617; Hismaic TIJ 394*.

-fa. of *ʾḥwr* TIJ 394*

hkdn *hakada* ‘press a debtor’, *kadana* ‘couple oxen to a plough’, *kadn* ‘camel-saddle’, *kidān* ‘camel rope’, *kadin* ‘fleshy, plump’: Hismaic KJC 500.

hkn See *knn*, *kinn* ‘veil, covering’, *kawn* ‘being, existence’, *hakka* ‘crumble, pulverise’: Hismaic KJC 276.

hlʾ HIn 621 add Saf. MNSI 2 ii; Hismaic TIJ 58.

hlm *halama* ‘call out’, *halīm* ‘adhesive, sticky’, *hallim* ‘flaccid, soft’: HIn 622; Hismaic TIJ 25, TIJ 519.

-s. of *mʿnʾl* TIJ 519

-s. of *wddʾl* TIJ 25

hm *hamma* ‘purpose, intend, be anxious about, melt (fat)’, *hamm* ‘intention, purpose, care’, *himm* ‘decrepit, weak, old man’, *hwm*, *hām* ‘headmen or chiefs’: HIn 622 Saf.; Hismaic KJC 369.

hmrʾ See *mrʾ* or *hamara* ‘pour out’, *hammār* ‘cloud pouring forth much rain, loquacious, a babbler’: Hismaic KJB 180*.

hml *hamala* ‘overflow, pour forth, pasture freely’, *himl* ‘ragged hair-tent’, *hummāl* ‘soft, waste land’: HB 52 *Hamel*; HIn 624 Saf.; Hismaic KJC 443, TIJ 134.

-fa. of *gtt* KJC 443

-fa. of *ʿbd* -fa. of *gryt* TIJ 134

hn See *hwn*, *hawn* ‘tranquility, modesty’ *hayn* ‘easy’ or *hnn*; CIK 281,1 *al-Haun*; ID 110 etc.; HIn 625 Saf.; Tham.B HE 38, HU 727, HU 758; Hismaic KJB 70.

-fa. of *mġny* KJB 70

hnʾ *hanuʾa* ‘be pleasant’, *hanaʾa* ‘feed, succour, defend, smear a camel with tar’, *hāniʾ* ‘servant’, *hinʾ* ‘tar, liquid pitch’: CIK 278,2-279,1 *Hāniʾ*, CIK 283,1 *Hinʾ*; ID 218 etc. WR 204; BDrN 19 *Hānī*; Cantineau 87 *hnʾ*, *hnʾw*, *hnyʾw*; LittNE 2 233 *hnʾw*; Stark 84 *hnʾy*; HIn 625 Lihyn, Saf., Tham.B JS 276, Tham.? HU 157; Hismaic KJA 23, KJA 27, KJA 28, KJA 48*, KJA 99, KJA 157, KJA 197, KJA 300, KJA 351, KJB 102, KJB 105, KJB 106a*, KJB 110, KJB 139, KJB 173, KJB 177, KJC 86, KJC 93, KJC 194, KJC 240, KJC 344*, KJC 379, KJC 576, KJC 623, KJC 679, KJC 758, KnEG 2, KnEG 5, TIJ 31, TIJ 105, WTI 11.

-fa. of *tnn* KJA 48*

-fa. of *mrʾyġt* KnEG 2

-s. of *tmd* TIJ 105

-s. of *gḥs²* KnEG 5

-s. of *zdqm* KJA 27, KJA 99, KJA 300, KJB 105, KJB 173, KJB 177

-fa. of *tnn* KJC 758

-s. of *zdqm* -s. of *ʾʿbd* -s. of *ʿkl* KJB 110

-s. of *s²b* TIJ 31

hnʾt See *hnʾ*, *hanīʾah* ‘wholesome food, easy affair’: CIK 279,1 *HāniʾaHanīʾa*, CIK 286,2 *Hunāʾa*; ID 292; WR 204; LittNE 2 233 *hnʾt*; HIn 625 Saf.; Hismaic KWM 1, TIJ 211, TIJ 350, TIJ 392, TIJ 497; PNNR 22.

-fa. of *rh (?)* -fa. of *nr* TIJ 392

-s. of *s¹nt* TIJ 350

-s. of *s¹ʿd* TIJ 211

-s. of *ẓm̊* TIJ 497

hnʾlh Cmpd., see *hnʾ*: LittNE 2 233 *hnʾʾlhy*; HIn 626; Hismaic AMJ 132, KJC 2, KJC 5, KJC 31, KJC 557, TIJ 8, TIJ 127, TIJ 133, TIJ 438, TIJ 482; PNNR 22 *hnʾlhy*.

-fa. of *tblt* TIJ 438

-fa. of *tmlt* TIJ 482

-fa. of *zdlh* -fa. of *s¹mdt* AMJ 132

-s. of *ʾḫ* TIJ 127

-s. of *ʾḫmr* TIJ 133

-s. of *tmlḥwr* -s. of *whblh* KJC 2

-s. of *fṣy* TIJ 8

-s. of *wddʾl* -fa. of *zdlh* KJC 5

hnʾmnt Cmpd., see *hnʾ*: HIn 626 Saf.; Hismaic TIJ 37*.

-fa. of *whblh* -fa. of *-rgs²* TIJ 37*

hnlh Cmpd., see *hn*: Hismaic AMJ 45, AMJ 49.

-s. of *ḥbb* -s. of *rgʿ* -fa. of *whblh* AMJ 45, AMJ 49

hnn *hanna* ‘weep, moan’: HIn 627; Saf.; Hismaic KJC 710*, TIJ 359.

-s. of *qnt* -s. of *qdm* TIJ 359

hhd See *hd*: Hismaic KJC 663*.

hwd *hwd*, *hāda* ‘return, act gently’: HIn 628 Saf.; Hismaic LAU 37*.

-s. of *lb* LAU 37*

hwn *hwn*, *hāna* ‘be low, base, easy’, *huwān* ‘abjection’; cf. Cantineau 86 *hynt* fem.; cf. PNNR 22; Hismaic KJB 116.

-fa. of *mġny* KJB 116

hyd *hyd*, *hāda* ‘move, put in motion, frighten, chide’: cf. Cantineau 86 *hydn* ?; cf. PNNR 22 ?; Hismaic KJC 243*.

wʾl *waʾala* ‘seek refuge, shelter’: CIK 584,2-585,1 *Wāʾil*; ID 79 etc.; Cantineau 88 *wʾl*, *wʾlw* fem.; PNNR 23; LittNE 1 20 *wʾlw*; HIn 632 Lihyn, Saf., Tham.B HU 357*, Tham.C HU 122; Hismaic CTSS 1a, HU 498, JS 630, KJB 179, KJC 7, KWM 3, TIJ 223, TIJ 272, TIJ 486, WAM T 47.

-fa. of *ʾs¹d* TIJ 223

-fa. of *yʿly* HU 498

-fa. of *yly* JS 630

-s. of *s¹ʿdlh* KJB 179

-s. of *mḥrs¹* TIJ 486

-s. of *hḏr* KJC 7

wʾlt See *wʾl*: CIK 585,2 *Wāʾla*; ID 114; WR 459; Cantineau 88 *wʾlt*, *wʾylt*; PNNR 23; LittNE 1 20 *wʾlt*; HIn 632 Saf., Hismaic JS 607, JS 734, TIJ 490.

-fa. of *qs¹* JS 607

-s. of *s²fr* TIJ 490

wʾln See *wʾl*: WR 460 *wālān*; Cantineau 88 *wʾln*; PNNR 23; HIn 633 Lihyn, Saf.; Hismaic JS 707, NST 1.

-s. of *bnbrḥ* JS 707

wb *wabba* (from *ʾabba*) 'prepare for a fight': Hismaic KJA 61, KJA 339, KJC 754.

wbr *wabr* 'hyrax', *wabar* 'fur or soft hair of the camel': CIK 581,1 *Wabr*, CIK 588,2 *Wubair*; ID 180 *Abu Wabr*; WR 456; HIn 633 Saf.; Hismaic WAM T 40*; PNNR 23 *wbr*.

wtr *watara* 'make sole or one', *witr* 'single, sole': Cantineau 90-91 *wtrw*, *wtyrw*; PNNR 25; HB 53 *el-Witair*; HIn 633-634 Saf.; Hismaic AMJ 17*, AMJ 125, AMJ 134, AMJ 137, CSP 2, KJA 30, KJB 19, KJB 48, KU 2, MNM b 6, Rh 1, TIJ 3, TIJ 73, TIJ 309, TIJ 336, TIJ 379.

-fa. of *ḫrgt* KJA 30

-fa. of *s²bt* KJB 19

-s. of *tmlh* -s. of *wtr* MNM b 6

-s. of *ṣrm* -fa. of *flgt* -fa. of *tmds²r* CSP 2

-s. of *ʿm* TIJ 336, AMJ 125

-s. of *ʿmt* TIJ 379

-s. of *fṣy* TIJ 3

-s. of *fht* -s. of *z*-- AMJ 134

-s. of *whblh* TIJ 309

wtm From *ytm* ?, *yatama* ‘be an orphan’, *yatima* ‘weary, jaded’, *yatīm* ‘orphan’: HIn 634 Saf.; Hismaic TIJ 29.

-s. of *kḥm* TIJ 29

wṯm *waṯama* ‘run swiftly (a horse)’, ‘paw the ground’, *waṯima* ‘have scanty plants’, *waṯam* ‘small quantity’: cf. CIK 588,2 *Waṯīma*; Hismaic WAM T 29.

-s. of *qs¹m* WAM T 29

wgdt *wajada* ‘find’, *wuǰd*, *wajd* ‘richness, sufficiency’, *wājid* ‘finder, rich, possessing competence’: HIn 635 Saf.; Hismaic KJA 355, KJC 218.

-fa. of *[t]m* KJA 355

-fa. of *tm* KJC 218

wḥṯ Hismaic KWM 18.

-s. of *mʿnlh* -s. of *mty* -s. of *nʿrt* KWM 18

wḥṯṯ See *wḥṯ*: Hismaic TIJ 294, TIJ 469.

-s. of *ṭrq* TIJ 294, TIJ 469

wḥg Hismaic KJA 212*, KJC 315*.

-s. of *ḏ̄k(y)* KJA 212*, KJC 315*

wḥd *waḥada* ‘be alone’, *waḥd*, *waḥīd* ‘alone’: CIK 584,2 *al-Waḥīd*; ID 180; WR 458; HIn 635 Saf.; Hismaic TIJ 297, TIJ 361.

wḥs² *waḥš* ‘desolate, deserted (country), wild (animal)’: cf. CIK 584,2 *Waḥšī*; BDrN 19 *Waḥš*; HB 53; Cantineau 90 *wḥšw*; PNNR 24; HIn 636 Saf.; Hismaic TIJ 166*, TIJ 412.

-s. of *ʿmrn* TIJ 166*

wḥf *waḥafa* ‘hurry towards’, *waḥifa* ‘be luxuriant (plant, hair)’, *waḥf* ‘luxuriant, thick (plant, hair)’; CIK 584,2 *Waḥf*, CIK 589,1 *Wuḥaif*; ID 243; HIn 636 Saf. add Tr.N JaS 171; Tham.B HU 268; Hismaic KJB 113a*, KJC 102, KJC 610, TIJ 139, WAM T 54.

-fa. of *ʾs¹* TIJ 139

wd See *wdd*: *widd*, *wudd*, *wadd* ‘loved one, beloved’: CIK 581,2 *Wadd*; Cantineau 89 *wdw*; PNNR 23; LittNE 1 20, LittNE 2 233 *wdw*; HIn 636

Saf. add JaS 174a?; Hismaic CTSS 3, JS 664*, TIJ 58, RyGT 2, TIJ 58, WA 10379.

-fa. of *ṣḥṭ* CTSS 3

-fa. of *mʿ* RyGT 2

wdʾt *wadaʾa* ‘make even, ill-treat’, *wadāʾ* ‘destruction, perdition’: HIn 637; Hismaic TIJ 182.

-s. of *ḥrt* TIJ 182

wdd *wadda* ‘love’, *wadīd* ‘loved, beloved’: HB 53 *Udêd*; Cantineau 89 *wdydw*; PNNR 23; HIn 637 Lihyn, Saf., Tay. JS 552; Hismaic AMJ 76, KJA 228.

-fa. of *ʿlt* AMJ 76, KJA 228

wddʾl Cmpd., see *wdd*: HIn 637 Lihyn, Saf., Tay. JS 560; Hismaic KJC 5, TIJ 25, TIJ 68, TIJ 180*; PNNR 23 *wddlʾl* ??.

-fa. of *hlm* TIJ 25

wdʿ *waduʿa* ‘be still, quiet, in a state of ease’: CIK 581,1-2 *Wadāʿ*; ID 298; cf. WR 457 *wadīʿa*; Cantineau *wdʿw*; PNNR 24; LittNE 2 233 *wdʿw*; HIn 638 Lihyn, Saf.; Hismaic JS 714, KnEG 1.

wrb *wariba* ‘become corrupt’, *warib* ‘corrupt’, *warb* ‘den of wild beasts’: HIn 639; Hismaic TIJ 452, TIJ 463.

-fa. of *s²ṣr* -fa. of *ḥrzt* TIJ 452

-s. of *mty* -fa. of *s²ṣr* -fa. of *ḥrzt* TIJ 463

wrs²t *waraša* ‘take, eat greedily, covet’, *wariša* ‘be swift’, *wariš* ‘brisk, lively’: HIn 640; TIJ 140, TIJ 322.

-s. of *ʾftḥ* TIJ 322

wrl *waral* ‘monitor lizzard’: HIn 640 Saf.; Hismaic KJA 31, KJA 138*.

-s. of *ʿkl* -fa. of *qn* KJA 138*

-s. of *qn* -fa. of *qn* KJA 31

wrqns¹ cf. Gk. Preisigke 1922: 451 Ὑρκανός; HIn 640; Hismaic TIJ 208.

ws¹ṭ *wasaṭ* ‘middle, just’: BDrN 20 *Wāṣiṭ*: Hin 642 Saf.; Hismaic TIJ 330, TIJ 381, TIJ 461.

-s. of *hrb* -fa. of *nhbn* TIJ 461

-s. of *dḥlt* TIJ 330

-s. of *hrr* TIJ 381

ws¹ʿ *wasiʿa* ‘be broad, wide, ample’, *wasiʿ* ‘ability, wealth’, *wasīʿ* ‘broad, capacious’, *wāsiʿ* ‘having power, ability’; CIK 588,1 *al-Wasīʿ*, *Wāsiʿ*; HIn 642 Saf.; Hismaic TIJ 165.

-fa. of *ʿbd* TIJ 165

ws¹q *wasaqa* ‘store, heap, drive (camels)’, *wasq* ‘camel’s load’: HIn 642 Saf.; Hismaic KJC 689.

ws¹l *wāsil* ‘pious’, *wasīlah* ‘means of access to a thing’: HIn 642 Saf.; Hismaic RTI B.

ws¹mʾl *wasīm* ‘comely, handsome’: HIn 642 Saf.; Hismaic TIJ 160*.

ws²kt *wašaka* ‘be quick, expeditious (an affair)’, *wašīk* ‘expeditious, speedy’: Cantineau 90 *wšykt*; HIn 643 Saf. add JaS 118; Hismaic TIJ 6, TIJ 27; PNNR 25.

-s. of *n--* TIJ 6

-s. of *lṯmt* TIJ 6, TIJ 27

wḍʾ *waḍuʾa* ‘be fair, clean’: HIn 643 Saf.; Tham.B HU 374; Hismaic KJA 138.

-s. of *zhmn* -fa. of *ẓnn* KJA 138

wṭs¹ *waṭasa* ‘stamp, beat the ground’, *waṭīṣ* ‘battle’, *waṭṭāṣ* ‘pâtre**,** berger’: HIn 644 Saf.; Hismaic TIJ 254*.

wʿd *waʿada* ‘promise, threaten’, *waʿd* ‘promise’, *waʿīd* ‘threatening, threat’: Stark 85 *wʿd*; Hin 644 Saf.; Mixed WTI 32, WTI 33; Hismaic CTSS 2b.

wʿḏ See *wʿd*: Hismaic KJA 318.

-fa. of *ḥzyt* KJA 318

wʿr *waʿura* ‘be rugged’, *waʿr* ‘rugged’: Stark 85 *wʿr*; HIn 645 Saf.; Hismaic TIJ 515.

-s. of *s¹ʿdlh*

wʿṭ Hismaic TIJ 362.

wʿl *waʿl* ‘mountain goat’, *waʿlah* ‘steep part of a mountain’: cf. CIK 586,1 *Waʿala*, *Walīʿa*; cf. ID 211; LittNE 1 20 *wʿl*; HIn 645 Saf., Tham.B HU 375; Hismaic AMJ 121, KJC 7, KJC 215, KJC 280, KJC 346, TIJ 321, TIJ 325, WAM T 27.

-fa. of *tm* AMJ 121

-fa. of *s²gr* TIJ 325

-fa. of *krh* KJC 280

-s. of *ʾglḥ* -fa. of *s²hr* TIJ 321

-s. of *qnt* KJA 215

-s. of *ḥḏr* KJC 7

wfd *wafada* 'come as an ambassador', *wafd* 'envoy, embassy': HIn 646 Saf.; Tham.? HU 774*, HU 775; Hismaic TIJ 416, TIJ 446.

wfṣ Hismaic KJC 480*.

-fa. of *ms¹ʿd* KJC 480*

wqs² *waqaša* 'spread on the body (a scab)', *waqš* 'scab': CIK 587,1 *Waqš*; HIn 647 Saf.; Hismaic JS 746, JS 753.

-fa. of *(ʾ)ys¹* JS 746

wqf *waqafa* 'stand up', *wāqif* 'standing still': CIK 587,1 *Wāqif*; ID 265 *Banū Wāqif*; HIn 647 Saf.; Hismaic KJC 167.

wly *wly*, *walā* 'be adjacent', *waliya* 'rule', *ʿwaliy* 'friend, master': Stark 85 *wly*; HIn 650 Saf.; JS 35 (Tr.N).

whb *wahaba* 'give', *wāhib* 'giving'; CIK 582,1-584,1 *Wahb*, *Wāhib*, CIK 588,2 *Wuhaib*; ID 36, ID 56 etc.; WR 458; BDrN 20 *Wihib* etc.; Cantineau 89 *whb*, *whbw*; PNNR 24; Stark 85 *whbʾ*, *whby*, Stark 91 *yhybʾ*; HIn 651 Lihyn, Saf.; Mixed WTI 12; Hismaic KJC 62, KJC 196, MNM a 4, TIJ 1.

-s. of *[---]* -s. of *[s¹]ʿdlh* MNM a 4

-s. of *rfd* TIJ 1

whbʾḫwr Cmpd., see *whb* and *ʾḫwr*: Hismaic KJC 291.

-s. of *bẓry* -s. of *ns²r* KJC 291

whbʾl Cmpd., see *whb*: CIK 584,1 *Wahbīl*; Cantineau 89 *whbʾl*; PNNR 24; HIn 651 Lihyn, Saf.; Hismaic KJB 182*, KJB 392, TIJ 84, TIJ 234, TIJ 235, TIJ 239, TIJ 451*, TIJ 485.

-fa. of *ʾs¹wr* TIJ 235

-s. of *ḏḥkl* TIJ 485

-s. of *nhk* TIJ 84

whbl Cmpd., see *whb*: Hismaic KJC 581.

whblh Cmpd., see *whb*: CIK 584,1 *Wahlballah*; WR 458; Cantineau 89 *whbʾlh*, *whbʾlhy*, *whblhy*; PNNR 24; HIn 652, HIn 653 Lihyn, Saf.; Hismaic AMJ 43, AMJ 45, AMJ 49, AMJ 141, AMJ 148, AMJ 157, JS 675*, JS 699*, KJA 36, KJA 254*, KJC 2, KJC 255, KJC 624, MNM a 2, TIJ 37, TIJ 70, TIJ 78, TIJ 85, TIJ 87, TIJ 145, TIJ 157, TIJ 190, TIJ 217*, TIJ 230, TIJ 309, TIJ 368, TIJ 460, TIJ 484, TIJ 487.

-fa. of *[]tm* TIJ 157

-fa. of *ʾs¹lh* TIJ 85, TIJ 487

-fa. of *tmlḫwr* -fa. of *hnʾlh* KJC 2

-fa. of *s¹ʿdlh* TIJ 78

-fa. of *fṣy* AMJ 148

-fa. of *mḫrs¹* TIJ 145

-fa. of *wtr* TIJ 309

-fa. of *yḏr* KJA 36

-s. of *ʾdʿn* AMJ 157

-fa. of *ʾdʿn* AMJ 141

-s. of *tmʿbdt* -s. of *s²fr* -s. of *tmʿbdt* TIJ 190

-s. of *tym* -s. of *ḫrgl* TIJ 460

-s. of *s¹ḫl* -fa. of *ʿbd* AMJ 43

-fa. of *ḫrgt* TIJ 484

-s. of *s¹ʿd* -s. of *wh--* TIJ 217*

-s. of *s¹ʿdʾl* -fa. of *s¹ʿdʾl* MNM a 2

-s. of *ʿqrb* KJA 254*

-s. of *ʿmr* KJC 255, TIJ 70

-s. of *ʿyḏ* TIJ 368

mḫmy JS 699*

-s. of *hnʾ[]mnt* -fa. of *-rgs²* TIJ 37

-s. of *hnlh* -s. of *ḫbb* -s. of *rgʿ* AMJ 45, AMJ 49

whbn See *whb*: CIK 584,1 *Wahbān*; Cantineau 89 *whbn*; PNNR 24; HIn 653 Saf.; Hismaic JS 623, MNM b 6, TIJ 252, TIJ 340.

-s. of *(ḥ)ms²* JS 623

-fa. of *ḫlflh* -fa. of *mḥrs¹* MNM b 6

whdt *wahd* 'low, depressed place', *wahdah* 'hollow, cavity': HIn 653 Saf.; Hismaic NST 1, TIJ 304.

-fa. of *ḥṣr* TIJ 304

wyq Hismaic LAU 21.

yʾl See *wʾl*, imperfect *yaʾila*: *ʾwl*, *āla* 'return': Hismaic KJC 201.

yb *yabba* 'waste, ruin': Hismaic KJA 150.

-s. of *ns²r* -fa. of *s²br* KJA 150

ybnn See *bnn*: cf. HIn 656 *ybn*; Hismaic UR 4.

ytr See *wtr*: Cantineau 105 *ytyrʾ*; PNNR 34; HIn 657 Saf.; Hismaic KJC 297*, LAU 12, KJC 297*, TIJ 122, TIJ 303, TIJ 305, TIJ 332, TIJ 370, TIJ 380, TIJ 396, TIJ 404, TIJ 435, TIJ 456, WAM T 46.

-fa. of *s¹dl* KJC 297*

-s. of *bt* TIJ 122, TIJ 370, TIJ 380, TIJ 404

-s. of *nbt* LAU 12, TIJ 303, TIJ 305, TIJ 332, TIJ 396, WAM T 46

ygq Hismaic KJC 297*.

yḫld See *ḫld*: CIK 589,2-590,1 *Yaḫlud*; ID 35; WR 251; HIn 663 Saf.; Tham.C JS 130; Tham.C ? JS 65, JS 76, JS 140; Hismaic KJA 138*.

-s. of *bns²br* -fa. of *zhmn* KJA 138*

ydʿ See *wdʿ*, *dʿw*, *daʿā* 'call', *yadaʿa* 'dye cloth red', Syr. *yīdaʿ* 'know': Stark 90 *ydʿw*, *ydʿy*, *ydyʿ*; HIn 663 Lihyn, Saf.; Tay. JS 538; Mixed JS 596; Hismaic HS 551.

-fa. of *ʿbdʿzy* HS 551

yḏr *ḏarra* 'sprinkle salt on meat', *ḏyr*, *ḏāra* 'loathe' or from *naḏara* 'make a vow', *naḏr* 'vow': cf. CIK 235,2 *Ḏarr*; cf. HIn 131 Saf. *tḏr*; Hismaic KJA 36, LAU 33, TIJ 225*, WAM T 11.

-fa. of *ḫrgt* LAU 33, WAM T 11

-s. of *ʿbd* -s. of *yḏr* -s. of *whblh* KJA 36

-s. of *km* -s. of *gmhr* TIJ 225*

-s. of *whblh* -fa. of *ʿbd* KJA 36

yḏʿ See *ydʿ*: HIn 665; Hismaic TIJ 69.

-fa. of *ḫrgt* TIJ 69

yḏmtn Hismaic KJC 720.

yrfn *rafana* 'be weak, remiss, flee away and rest, cool (anger)': Hismaic KJC 239, KJC 567.

yzd See *zyd*: CIK 592,2-597,1 *Yazīd*; ID 53 etc.; WR 255; HIn 669 Tham.? HU 57; Hismaic TIJ 14a.

ys¹lm See *s¹lm*. HIn 671 Saf.; Tham.? JS 17; Hismaic CTSS 2b.

yẓr *ẓarra* 'cut off a fragment of hard stone' or from *nẓr*: Cantineau 103 *yṭwr*; PNNR 33; HIn 674 Saf.; Hismaic KJC 133, KJC 490, KJC 505.

yʿly See *ʿly*: CIK 590,1 *Yaʿlā*; ID 44; Cantineau 104, Cantineau 131 *yʿly*; PNNR 34; HIn 677 Saf.; Hismaic AMJ 151, HU 498, JS 694, WTI 11.

-fa. of *ʾḫwr* AMJ 151

-fa. of *ṭr̊* JS 694

-s. of *rs²* WTI 11

-s. of *wʾl* HU 498

yʿmr See *ʿmr*: CIK 590,1-2 *Yaʿmar*, ID 106; WR 253; Cantineau 104, Cantineau 133 *yʿmrw*; PNNR 34; HIn 677 Saf.; Hismaic MNM b 5.

-s. of *ns²l* MNM b 5

yġṯ See *ġṯ*: ID 59 *Yaġūṯ* (as idol mentioned in the Quran); Faris 1952: 9; Cantineau 104 *yʿwt* D.N.; Stark 91 *yʿt*, *yʿtw*; HIn 678 Saf.; Hismaic KJA 123, KJA 159, KJC 24*, TIJ 315a WAM T 6*.

-fa. of *ḥb̊y* KJC 24*

-s. of *ʾfṣy* WAM T 6*

-s. of *ʿwḏ* TIJ 315a

yfʿ *yafaʿa* 'be grown up, adult', *yāfiʿ* 'adult, young man': CIK 587,1 *Yāfiʿ*; HIn 679 Lihyn, Saf., Tay. JS 460, Tay. JS 507, Tay. JS 524, Tay. JS 563 *bis*; Hismaic MNM a 4*.

-s. of *whb* -fa. of *s¹ʿdlh* MNM a 4*

yqm See *qm*; Cantineau 142 *yqwm*; PNNR 34; HIn 680 Saf.; Hismaic KJA 95, KJA 299*, KJC 147c, KJC 149, LAU 34.

-fa. of *s¹ʿr* LAU 34

-s. of *ʾ--y* KJA 299*

ykbr See *kbr*: HIn 683 Saf.; Hismaic AMJ 13.

yly From *wly* ?: HIn 683; Hismaic JS 630.

-s. of *wʾl* JS 630

ynʿ *yanaʿa* 'ripen, be practicable', *yāniʿ* 'ripe, red colour', *yanaʿ* 'red beads, red shells, cornelian': CIK 590,2 *Yanʿ*, *Yanāʿ*; HIn 685 Saf.; Hismaic TIJ 62, TIJ 406.

-s. of *fṣy* TIJ 62

-fa. of *(ʾ)s¹lb* TIJ 406

INDEX a: Names and Genealogies from the *Wādī Judayyid* Sites

ʾb KJA 206

ʾbn KJC 288, 481

ʾtr KJC 403

ʾgd KJC 405

ʾḥls KJA 40, KJB 138, KJC 423, 631

ʾḥlk KJB 138

ʾḫ ? KJA 20

ʾḫ ʾb -fa. of *fnd*, KJC 4, 283
-s. of *ʿn ʾl*, KJC 282

ʾḫy -fa. of *s²ṣr*, KJB 58
-s. of *g ʿd*, KJC 134

ʾdd -fa. of *ġṯ*, KJA 182
-fa. of *m ʿs¹*, KJC 588

ʾdr KJA 195

ʾdrm -fa. of *ḥr*, KJA 349, KJC 253
-s. of *ʾs¹lh* - fa. of *ḥr*, KJC 271

ʾdm -fa. of *ʾmt*, KJC 223

ʾḏkw -fa. of *ḏky* - fa. of *s²mrḫ* KJC 179
- fa. of *s¹nm* KJC 742

ʾḏnt KJA 5

ʾrs² KJC 206, 247
-s. of *ʾftḥ*, KJC 269, 380, 573
-s. of *ft*, KJC 396

ʾrs²[t] -s. of *ʿln*, KJA 170

ʾrs²lh KJA 255, KJB 69, 114, 125, KJC 512
-s. of *ʿhn*, KJA 108

ʾr ʿt KJC 570

ʾs¹ -fa. of *ʾs¹lm*, KJC 36
-s. of *bnng ʾt*, KJC 82
-s. of *ḏ-*, KJB 141
-s. of *ʿhn* -s. of *tm*, KJC 270

ʾs¹d KJC 216, 232

ʾs¹lm KJA 327
-fa. of *bhʾ*, KJA 17, KJB 57, KJC 151
-fa. of *ḥrs¹*, KJA 112, KJC 442a
-fa. of *km*, KJA 237
-fa. of *lṯ*, KJA 37
-fa. of *lhṯ*, KJB 30, KJC 321, 750
-s. of *ʾs¹*, KJC 36
-s. of *ms¹lm* -fa. of *bhʾ*, KJB 47
-fa. of *ḥrs¹*, KJC 522
-fa. of *ṣḥb*, KJB 158

ʾs¹lh KJB 166
-s. of *tm* -fa. of *ʾdrm*, KJC 271
-s. of *ḫgrt* -fa. of *mḥwr*, KJA 30
-s. of *ʿrs¹*, KJC 440

ʾs¹mnt KJA 167, KJC 101, 155a, 580
-fa. of *brr*, KJC 128, 257, 668
-s. of *ḥrm*, KJA 29b, 186, 225, KJC 21, 55, 89, 221, 263
-s. of *mtr*, KJA 84, KJC 176, 370, 700

ʾs¹y -fa. of *mhṣ* -fa. of *ʿrhz*, KJC 29

ʾs²rs¹ KJA 226

ʾs²s² KJA 334, KJB 8, 97, KJC 160, 166, 334
-s. of *ʿlṭ*, KJB 64, KJC 190
-s. of *ʾmn*, KJB 6

ʾs²ṣr KJA 16, 207, KJB 151, KJC 248, 278, 565, 661
-s. of *zdqm*, KJA 53, KJB 155, KJC 287

ʾṣfr -fa. of *ʿly*, KJC 641

ʾṣlḥ KJC 73, 515, 596, 698
-s. of *ngʾ*, KJA 152
-s. of *qnt*, KJC 391, 452

ʾṯḫd -fa. of *mtr*, KJC 114
-s. of *klf* -fa. *mtr*, KJC 174

ʾʿ KJC 22
ʾʿbd -fa. of *zdqm*, KJC 188
-fa. of *ʿm*, KJC 274
-s. of *ʿbdt* -fa. *ʿm*, KJA 194
-s. of *ʿkl* -fa. *zdqm*, KJB 110, KJC 169

ʾʿbdt KJA 179, KJC 35, 182, 241, 277, 503, 594
-s. of *s¹yr*, KJB 17, 90

ʾʿs¹ KJC 31a

ʾʿfr -s. of *ṣ ʿb* -fa. of *ms¹k*, KJC 147i

ʾġnt -fa. of *zdn*, KJC 740
-fa. of *nht* -fa. of *ġrṯm*, KJA 270, KJC 75
-s. of *mqẓ* -fa. *nht* -fa. of *ġrṯm*, KJA 83

ʾftḥ -fa. of *ʾrs²*, KJC 269, 380, 573
-fa. of *s²ll*, KJB 73

ʾfl KJC 42, 147f, 191, 451, 550b, 646
-s. of *ʿbdlg*, KJC 205

ʾlwḏ -fa. of *s¹rqt*, KJC 281

ʾm KJA 157

ʾmt KJC 498, 710
-s. of *ʾdm*, KJC 223

ʾmr KJA 244

ʾmrt KJC 439
-s. of *s¹lm* -fa. of *ʿwr*, KJC 438

ʾmrh KJA 133

ʾmn KJA 62, KJB 40, KJC 142, 361, 407, 485, 492, 564
-fa. of *ʿlṭ*, KJA 10, KJB 6, 62
-s. of *s¹dn*, KJA 198
-s. of *nḫy*, KJC 126
-s. of *s¹ ʿ-*, KJC 708
-s. of *ftḫt* -fa. of *ʿlṭ*, KJB 95

-s. of *ṯyq*, KJB 7

ʾmh KJC 659

ʾns² -fa. of *km*, KJB 130

ʾnʿm KJA 171, 315, KJB 81, KJC 53, 78, 158, 371, 387, 642, 688, 723
-s. of *brd*, KJA 190, KJB 78, 84, 87, 144, KJC 20, 372, 448, 645, 705, 737
-s. of *mtr*, KJA 332, KJC 638
-s. of *ʾṯḫd*, KJC 114
-s. of *klf* -s. of *krrt*, KJC 174
-s. of *m--*, KJA 278
-s. of *mlk*, KJA 189, 305, 309

ʾnf KJA 58, 145, KJB 117

ʾys¹ KJC 41

bgt KJA 130, 193, KJC 43, 147e, 714
-fa. of *m--*, KJC 81
-s. of *tmʾl*, KJC 224
-s. of *nht*, KJC 508

bgl KJB 162

bglt KJC 628
-fa. of *ḥgg*, KJB 77
-fa. of *ʿm*, KJA 191
-s. of *zdlh* -fa. of *ḥgg*, KJC 5

bḏ KJC 618a

br KJC 411, 751

brḥt -s. of *qdmt* -fa. of *bmṭr*, KJC 147j

brd KJA 28, 345, KJB 140, KJC 100
-fa. *ʾnʿm*, KJA 190, KJB 78, 84, 87, 144, KJC 20, 372, 448, 645, 705, 737
-d. of *ʿlm*, KJC 329
-s. of *mtr* -fa. of *ʾnʿm*, KJA 332, KJC 638
-s. of *mtr* -s. of *ʾṯḫd* -fa. of *ʾnʿm*, KJC 114, 174

brr KJA 220, KJB 83, KJC 147, 147a, 350
-s. of *ʾs¹mnt*, KJC 128, 257, 668

brqs² KJC 639

brḫn KJB 11

bs² KJC 97b, 187b, 601

bṯr KJC 442b

bṣṣ -s. of *km*, KJA 331

bẓ KJC 171

bẓry -s. of *ns²r* -fa. of *whb ʾḥwr*, KJC 291

bẓẓ KJC 122

b ʿb KJB 15

b ʿr KJC 140

b ʿhn KJC 162

bġ KJC 741

bġtt KJC 318

bġḍ KJC 172, 759

bqqt -s. of *s²hr* -fa. of *blqt*, KJC 5

bql KJB 13

bls¹ -s. of *rḫmt*, KJC 572

blṯ° KJC 711

blqt -s. of *bqqt* -fa. of *wdd ʾl*, KJC 5

bll KJA 57
-s. of *ṣḥb*, KJC 699

bn KJA 141, KJC 75a, 417

bn ʾb KJC 164, 461, 462, 467, 473, 474, 475, 476, 482, 484, 486, 491, 532, 533, 536, 537a, 563, 694, 706

bn ʾl KJA 8, KJC 335

bnʾmt KJA 137
-s. of *ḏbʾ* -fa. of *knn*, KJB 110
-s. of *nʿmy* -fa. of *mḫr*, KJA 94

bnbs¹r KJA 118, KJC 415
-s. of *s²kr*, KJC 634

bntrb KJC 284, 611, 640

bns² KJC 19, 163

bns²br -s. of *nbṭ* -fa. of *yḫld*, KJA 138

bnṣrlh KJC 27, 525

bnṣlh KJC 127

bnʿtq KJA 109, KJB 5, 98

bnʿml KJB 18

bnʿmh KJA 146, KJB 146, KJC 493, 608
-s. of *mtr*, KJA 313

bnlh KJA 227, KJC 510
-fa. of *tm*, KJB 66, 169, KJC 211

bnmṭr -s. of *brḥt* -s. of *qdmt*, KJC 147j

bnngʾt -fa. of *ʾs¹*, KJC 82

bny KJA 28, KJC 592
-s. of *s¹mnn*, KJC 626

bnyt KJA 120, 161
-s. of *ʿmdn* -fa. of *[g]fft*, KJC 147d

bhʾ KJB 124
-fa. of *ʾḫ ?*, KJA 20
-fa. of *gḥfl*, KJC 50a
-fa. of *grf*, KJC 71
-s. of *ʾs¹lm* -fa. of *gḥf*, KJB 57
-fa. of *gḥfl*, KJC 151
-fa. of *ftḥ*, KJA 17
-s. of *ms¹lm* -fa. of *gḥf*, KJB 47

bhn KJB 154

bys[1] KJC 442c

tḥbb KJC 527

tr KJA 122

ts[1]*q* KJB 178
-s. of *zbd*, KJA 25

tṣr -fa. of ----, KJC 291

tġṯ KJC 681

tm KJA 86, KJB 96, KJC 192, 421, 509
-fa. of *ʾs*[1]*lh*, KJC 271
-fa. of *zdqm*, KJB 3
-fa. of *ʿhn,* KJC 270
-fa. of *qṯ*, KJC 394
-s. of *bnlh*, KJB 66, 169, KJC 211
-s. of *znd*, KJA 310
-s. of *ʿṣm* -fa. *zdqm*, KJC 212
-s. of *ġm*, KJC 667
-s. of *n*--, KJC 121
-s. of *wgdt*, KJA 355, KJC 218

tmʾl KJB 36, KJC 296, 320
-fa. of *bgt*, KJC 224
-s. of *nht*, KJA 202
-fa. of *bgt*, KJC 508

tmlḫwr -s. of *whblh* -fa. of *hnʾlh*, KJC 2

tmlh -KJC 204, 348, 658, 766
-fa. of *kmy*, KJA 132, KJC 575
-s. of *ʿbd*, KJC 703

tn KJC 299

tṯntn KJC 289

tnn KJC 761
-s. of *s*[1]*dn* -s. of *ḫyb*, KJC 183
-s. of *hnʾ*, KJA 48
-s. of *zdqm*, KJC 758

t̲br KJB 46, KJC 568, 719
-fa. of *ẓ̲ʿn*, KJC 716
-fa. of *krh*, KJC 716a

t̲tmt -fa. of *qn*, KJA 31

t̲r KJC 250

t̲rʾ KJC 236

t̲ry KJB 109

t̲ʿt KJC 347

t̲ʿlbn KJA 64, KJB 25, KJC 143

t̲fnt KJC 519

gbḫ° KJA 3

gbn KJA 163

gt̲t̲ -s. of *hml* -fa. of *s¹ny*, KJC 443

gḥf KJA 20, 217, 293, KJB 28, KJC 32, 109, 150, 767
-s. of *bhʾ* -s. of *ʾs¹lm*, KJB 57
-s. of *ms¹lm*, KJB 47

gḥfl KJA 158, KJB 55, 136, KJC 56, 72, 104, 238, 326, 428, 559
-fa. of *ftḥ*, KJB 172
-s. of *bhʾ*, KJC 50a
-s. of *ʾs¹lm*, KJC 151
-fa. of *ftḥ*, KJA 17
-s. of *-hʾ* -s. of *s¹hnlh*, KJB 44

gr KJC 215, 736
-s. of *ʿs²b*, KJC 733

grs² KJA 296

grs²ʿ KJC 739

grf KJA 50, 171, 216, 277, KJB 12, KJC 34, 48, 51, 60, 69, 95, 103, 152, 161, 419, 585, 613, 696, 734

grm KJC 550

-s. of *ḥrm* -s. of *ʿy*, KJC 13
-s. of *zdʾl* -fa. of *mty*, KJB 22

grmt KJB 106

grmlh KJC 266
-s. of *s²kmlh*, KJC 200

grmnt KJC 6

gs¹° KJC 662a

gs¹t KJC 678

gs²m KJC 445, 544, 546, 548, 558, 614, 618, 622, 632, 684, 746, 771

gʿṯm KJC 199, 390

gʿd -fa. of *ʾḫy*, KJC 134

[g]fft -s. of *bnyt* -fa. of *kʾt*, KJC 147d

gl KJA 329, KJC 619

gml KJA 92, KJB 58, 149, KJC 511
-s. of *zrt*, KJC 173

ḥb KJA 335, 352, KJC 251
-s. of *ḫrgt*, KJA 352
-s. of *s²b*, KJA 150a

ḥbb KJC 304

ḥbbʾl KJC 47

ḥby -s. of *yġṯ*, KJC 24

ḥt -s. of *ms¹k* -s. of *ʾʿfr*, KJC 147i

ḥg KJA 39, 262, 376, 579
-s. of *sʿdt*, KJC 202
-s. of *mhṣ*, KJA 128, 686

ḥgg KJA 330
-s. of *bglt*, KJB 77
-s. of *zdlh* -s. of *hnʾlh*, KJC 5

ḥgs²t KJC 364

ḥglt KJC 242

ḥd KJA 232, 323

ḥddʾ KJC 123

ḥdmr -s. of *ʿbd* -s. of *zdqm*, KJB 88
-s. of *ʾʿbd*, KJC 188

ḥr KJA 276
-s. of *ʾdrm*, KJA 349, KJC 253
-s. of *ʾs¹lh* -s. of *tm*, KJC 271
-s. of *y*, KJA 222

ḥrs¹ KJC 131, 605, 692
-fa. of *ʿrs¹*, KJC 207, 261, 337, 516, 615
-s. of *ʾs¹lm* -fa. of *ʿrs¹*, KJA 112, KJC 442a
-s. of *ms¹lm* -fa. of *ʿrs¹*, KJC 522

ḥrs¹t -s. of *flṭt*, KJA 208

ḥrḍ KJC 367

ḥrm KJA 317, 340, KJC 603
-fa. of *ʾs¹mnt*, KJA 29b, 186, 225, KJC 21, 55, 89, 221, 263
-s. of *ʿy* -fa. *grm*, KJC 13
-fa. *ktbt*, KJB 85
-s. of *mtr* -fa. of *ʾs¹mnt*, KJA 84, KJC 176, 370, 700

ḥrw KJC 308

ḥry -s. of *s¹ʿd*, KJC 385

ḥzbr KJA 286, KJC 90, 198, 293
-s. of *ʿbd*, KJC 25, 97, 489
-s. of *zdqm*, KJC 107, 169

ḥzrm KJA 172

ḥzyt -s. of *wʿḏ*, KJA 318

ḥs²s² KJC 562

ḥ ʿl ʔ KJC 88

ḥfẓ KJC 528, 583a

ḥlʾt -fa. of *qdmt*, KJC 147j

ḥm KJC 16, 40

ḥmdt -fa. of *s¹ḫr*, KJB 43

ḥn KJA 100, 153

(ḥ)(y)lʿ KJA 201

ḫbrt KJA 186

ḫḏmn -s. of *nht*, KJA 231

ḫr -fa. of *ʿrs¹*, KJA 52

ḫrgt -fa. of *ḥb*, KJA 352
-s. of *wtr* -fa. of *ʾs¹lh*, KJA 30

ḫrm -fa. of *ʿrb*, KJA 765

ḫl -s. of *krt* -fa. of *ʿd*, KJA 83

ḫlṣt KJC 375

ḫlf KJC 267

ḫwf KJC 141

ḫyb -fa. of *s¹dn*, KJC 183

db KJC 727
-fa. of *rfd*, KJC 111

dgt KJA 157

dgg KJA 297

dḫb KJA 256

dr KJA 273, 333

drg KJB 79, KJC 155, 209, 589, 602
-s. of *ḏḥk*, KJA 101, 175

drs[1] KJA 350, KJB 56, 61, 99, 150
-s. of *ḏḥk*, KJC 264, 458

drs[1]*t* KJB 93
-s. of *kr*, KJB 92
-s. of *krt*, KJA 258

drh KJA 214

dʿbt -s. of *km*, KJC 47a

dʿm KJB 136, KJC 87
-s. of *ṣḥb*, KJA 26, 154
-s. of *ʾs*[1]*lm* -s. of *ms*[1]*lm*, KJB 158

dn̊n KJC 148

ḏʾb KJA 55, KJB 60, 72, KJC 83, 157, 219, 441, 517, 561, 587, 650, 693
-fa. of *ʿyḏ*, KJC 333
-s. of *s*[1]*mʿn*, KJA 290, KJB 148, KJC 756
-s. of *qn*, KJA 44, KJB 174
-s. of *ms*[1]*kt*, KJB 156
-s. of *s*[1]*ʿd*, KJA 49

ḏfrn KJB 53, KJC 45, 648

ḏky -fa. of *wḫg*, KJA 212, KJC 315
-s. of *ʾḏkw* -fa. of *s*[2]*mrḫ* KJC 179
-fa. of *s*[1]*mn*, KJC 742

ḏlhs[1º] -s. of *s*[2]*ʿlh*, KJA 298

ḏhbn KJA 103, 104

rʾl KJC 177, 449, 455

rʾmlt -fa. of *rmk*, KJC 3

rb KJC 648
-fa. of *zdqm*, KJA 304

rbt KJA 264

rbʿ KJC 234

rbʿn° KJC 226

rgf° KJB 168

rgm KJA 241

rḫmt -fa. of *bls*[1], KJC 572

rḍ KJB 127

rʿ KJA 150b

rʿy KJC 119, 598

rġṯ KJC 17

rfʾy -fa. of *mty*, KJA 250, KJC 322, 738, 755

rfd KJA 235, KJC 156, 362, 408
-s. of *db*, KJC 111

rqb KJA 2

rks[1] KJA 73, 264, 306, 325, KJB 119, 126, KJC 63, 420

rm KJC 98, 411a

rmḫmlt KJB 21

rms[1] KJA 261, KJC 76, 409, 424, 530, 540, 666, 670

rmk -s. of *rʾmlt*, KJC 3

rh KJA 79, KJC 47b

rhs[1] KJA 6

rhs[1]*n* KJA 8

zbd -fa. of *ts*[1]*q*, KJA 25

zbʿ KJC 711

zḥrt KJC 10

zḥn KJC 343
-s. of *frs*[1], KJA 7

zdʾl KJB 23
-s. of *ʿy*, KJC 13

zdqm KJC 147b, 195
-fa. of *ʾsʾṣr*, KJA 53, KJB 155, KJC 287
-fa. of *ʿbd*, KJA 187, KJC 768
-fa. of *ḥdmr*, KJB 88
-fa. of *ḥzbr*, KJC 107
-fa. *hnʾ*, KJA 27, 99, 300, KJB 105, 173, 177
-fa. of *tnn*, KJC 758
-s. of *ʾʿbd* -fa. of *hnʾ*, KJB 110
-fa. of *ʿbd*, KJC 169, 188
-s. of *tm*, KJB 3
-s. of *ʿṣm*, KJC 212
-s. of *rb* -fa. of *-nʾ*, KJA 304

zdlh KJB 71, KJC 138, 144
-s. of *hnʾlh* -fa. of *bglt*, KJC 5

zdn KJC 11, 30, 115, 139
-s. of *ʾ---*, KJA 65
-s. of *ʾġ--*, KJC 331
-s. of *ʾġnt*, KJC 740

zdnn KJC 135

zrt -fa. of *gml*, KJC 173

zrm̊ KJA 82

zm -s. of *qn* -s. of *ms*[1]*kt*, KJA 341

znd -fa. of *tm*, KJA 310

zhmn KJB 68, KJC 358
-s. of *yḫld* -fa. of *wḏʾ*, KJA 138

zhy KJA 322
-fa. of *ġṯ*, KJA 34

s[rʾ]*b* KJA 127

s¹ ʾr -s. of *rm-*, KJB 45, 163

s¹ḫr KJA 316

s¹d KJB 1, KJC 577

s¹dm -s. of *ytr*, KJC 297

s¹dn KJC 671
-fa. of *ʾmn*, KJA 198
-s. of *ḫyb* -fa. of *tnn*, KJC 183
-s. of *nḫy* -fa. of *ʾmn*, KJC 126

s¹r -fa. of *mqmʾl*, KJB 133

s¹rr KJB 52

s¹rq KJA 84a

s¹rqt KJB 161, KJC 302
-s. of *ʾlwḏ*, KJC 281

s¹rw -s. of *ẓnn* -fa. of *ʿkl*, KJB 138

s¹ry -s. of *qn*, KJB 33
-s. of *knn* -fa. of *ʿkl*, KJB 110

s¹ʿd KJA 12, 51, 155, 281, 287, KJB 74, 134, 145, KJC 96, 154, 159, 220, 275, 404, 488, 504, 521
-fa. of *ḥry*, KJC 385
-fa. of *ʿbdʾyb*, KJA 168
-fa. of *fḫtn*, KJB 112
-fa. of *qymt*, KJB 115, KJC 665
-fa. of *ms¹kt*, KJA 49
-s. of *mʿn*, KJC 187
-s. of *ngʾ*, KJB 175

s¹ʿdʾl KJC 711

s¹ʿdt -fa. of *ḥg*, KJC 202, 293

s¹ʿdlh KJA 148
-fa. of *wʾl*, KJB 179

s¹ʿr KJC 656

s¹ ʿmn KJC 153

s¹fn KJA 173

s¹l KJC 59, 652

s¹lṭ KJA 284

s¹lm KJB 42, KJC 430, 712
-fa. of *ʾmrt*, KJC 438
-fa. of *s¹yr*, KJA 76, 320, KJB 82, 100, KJC 290
-s. of *ẓ ʿnt*, KJA 88, KJC 295, 749
-s. of *ft* -fa. of *s¹yr*, KJC 675

s¹lm ʾl KJC 499

s¹m KJB 13, KJC 662
-s. of *ʿhl*, KJA 97
-fa. of *ʿlfn*, KJB 137

s¹m ʿn KJA 192, KJC 351, 353
-fa. of *ḏ ʾb*, KJA 290, KJB 148, 756
-fa. of *hd*, KJC 539
-s. of *qn* -fa. of *ḏ ʾb*, KJA 44, KJB 174
-fa. of *s²brmt*, KJB 107
-s. of *ms¹kt* -fa. of *d ʾb*, KJB 156
-s. of *s¹ ʿd*, KJA 49 -fa. of *ḏ ʾb*, KJA 49

s¹mn KJA 106

s¹mnn -fa. of *bny*, KJC 626

s¹nr KJA 80

s¹nm KJB 39, KJC 136
-s. of *ḏky* -s. of *ʾḏkw*, KJC 742

s¹nn KJC 697

s¹ny -fa. of *khl*, KJB 135, KJC 389, 718, 722
-s. of *gtt* -fa. of *khl*, KJC 443

s¹hr KJC 606

s¹(h)m KJA 126

s¹hn̆lh -fa. of *-hʾ*, KJB 44

s¹yr KJA 70, 75, 239, 291, 292, KJB 34, 35, 37, 181, KJC 94, 314, 357, 359, 518, 676a, 724, 743, 747
-fa. of *ʾʿbdt*, KJB 17, KJB 90
-fa. of *ʿbd*, KJA 113, 337, KJC 378, 685, 735
-fa. of *ʿtft*, KJC 433
-s. of *s¹lm*, KJA 76, KJB 100
-fa. of *ʿbd*, KJA 320, KJB 82, KJC 290
-s. of *ft*, KJC 675

s² ʾwt KJC 339

s²b KJA 268
-fa. of *ḥb*, KJA 150a

s²bt -s. of *wtr*, KJB 19

s²br -s. of *yb* -s. of *ns²r*, KJA 150

s²brmt KJC 554
-s. of *s¹m ʿn* -s. of *qn*, KJB 107

s²by -fa. of *ġlb*, KJC 395

s²g ʿ KJB 94

s²ḥḥ -s. of *ʿbd*, KJC 125

s²r KJA 248

s²rṣ KJB 29

s²ṣr KJA 242, KJB 59, KJC 654
-s. of *ʾḫy*, KJB 58

s² ʿṯ ʿ KJC 552

s² ʿlh -s. of *ḏlhs¹*, KJA 298

s² ʿn -fa. of *ftyt*, KJC 690

s²kr -fa. of *bnbs¹r*, KJC 634

s²kmlh -fa. of *grmlh*, KJC 200

s²ll -s. of *ʾfṯḥ*, KJB 73

s²mrḫ KJA 115, 199, KJB 2, KJC 110, 310, 311
-s. of *ḏky* -s. of *ʾḏkw*, KJC 179

s²mmt KJC 203

s²hr -fa. of *bqqt*, KJC 5

ṣbn KJA 110

ṣḥb -fa. of *bll*, KJA 699
-fa. of *dʿm*, KJA 26, 154
-s. of *ʾs¹lm* -s. of *ms¹lm* -fa. of *dʿm*, KJB 158

ṣr KJB 14

ṣʿb -fa. of *ʾʿfr*, KJC 147i

ṣʿdt KJC 591

ṣmn KJA 204

ṣhb KJB 164

ṣhbt KJB 89, KJC 99, 197, 213, 374, 725
-s. of *mgʾ*, KJC 180
-s. of *qnt*, KJC 118

ḏb° KJA 247
-s. of *ʿlb*, KJA 289

ḏbʾ -fa. of *bnʾmt*, KJB 110

ḏbʿn KJB 86
-s. of *ʿbdʿbdt*, KJC 574

ḏḥk -fa. of *drg*, KJA 101, 175
-fa. of *drs¹*, KJC 264, 458

ṭgd° KJB 595

ṭyft KJC 586, 769

ṭyq -fa. of *kmnt*, KJA 245

-s. of *nṯt°* -fa. of *ftḥt*, KJB 7

ẓ ʿn KJC 721
-s. of *ṯbr*, KJC 716

ẓ ʿnt KJC 341
-fa. of *s¹lm*, KJA 88, KJC 295, 749

ẓnn -s. of *wḏ ʾ* -fa. of *s¹rw*, KJA 138

ʿb KJA 124, 147, 260, 275, 338

ʿb ʾ KJC 377

ʿbṯ° KJA 18

ʿbd KJA 116, KJC 18, 23, 436, 453, 526, 682, 715
-fa. of *tmlh*, KJC 703
-fa. of *ḥzbr*, KJC 25, 97, 489
-fa. of *s²ḥḥ*, KJC 125
-fa. of *mtn ʿ*, KJB 26
-fa. of *m-ʾktb*, KJC 442
-s. of *zdqm*, KJA 187, 768
-fa. of *ḥdmr*, KJB 88
-fa. of *ḥzbr*, KJC 107
-s. of *ʾ ʿbd* -fa. of *ḥdmr*, KJC 188
-s. of *ʾ ʿbd* -fa. of *ḥzbr*, KJC 169
-s. of *s¹yr*, KJA 113, 337, KJC 378, 685, 735
-s. of *s¹lm*, KJA 320, KJB 82, KJC 290
-s. of *yḏr* -fa. of *yḏr*, KJA 36

ʿbdʾḥwr KJC 757

ʿbdʾl(ʾ)[ḥ]wr -s. of *mḥwr*, KJC 202

ʿbdʾyb KJC 631a
-s. of *s¹ ʿd*, KJA 168

ʿbdt KJC 437
-s. of *ʿm* -sa. of *ʾ ʿbd*, KJA 194

ʿbdḥrṯt KJC 272

ʿbdʿbdt -fa. of *db ʿn*, KJC 574

ʿbdlg KJC 647

-fa. of *ʾfl*, KJC 205

ʿbdlh KJC 446

ʿbr KJA 149, 381

ʿbs¹ -fa. of *ʿmr*, KJC 267

(ʿ)bn KJB 51

ʿd -s. of *ḫl* -fa. of *ʿrb*, KJA 83

ʿḏ KJA 14

ʿr KJC 496

ʿrb KJA 15, 47, KJB 10, KJC 245
-s. of *ḫrm*, KJC 765
-s. of *ʿd* -fa. of *mqẓ*, KJA 83

ʿrs¹ KJB 170, KJC 66, 80, 106, 222, 294, 338, 342, 393, 495, 629, 651, 763
-fa. of *ʾs¹lh*, KJC 440
-s. of *ḫr*, KJA 52
-s. of *ḥrs¹*, KJA 207, 261, 337, 516, 615
-s. of *ʾs¹lm*, KJA 112, KJC 442a
-s. of *ms¹lm*, KJC 522

ʿrḏ(t) KJC 752

ʿrn KJC 703b

ʿrhz KJA 319, KJC 168, 425, 582, 593
-s. of *mhṣ* -s. of *ʾs¹y*, KJC 29

ʿry° KJA 102

ʿzz KJA 6

ʿs¹n KJC 124

ʿs¹y° KJA 38

ʿs² KJC 583

ʿs²b -fa. of *gr*, KJC 733

(ʿ)ṣḇ° KJC 707

ʿṣft -fa. of *ʿwḏ*, KJC 502

ʿṣm -fa. of *tm*, KJC 212

ʿṯft -s. of *s¹yr*, KJC 433

ʿṭl KJC 70

ʿqrb KJA 185
-fa. of *whblh*, KJC 254

ʿk KJA 283

ʿkl -fa. of *ʾʿbd*, KJC 169
-s. of *s¹rw* -fa. of *wrl*, KJA 138
-s. of *s¹ry* -fa. of *ʾʿbd*, KJB 110

ʿkmt KJC 312

ʿl KJC 443a
-s. of *nhk*, KJC 597

ʿlb KJB 108
-s. of *s¹-* -fa. of *ḏb*, KJA 289

ʿlt -s. of *wdd*, KJA 228

ʿlṭ KJA 223, 263, 271, KJB 4, 31, 38, 159, 165, KJC 33, 49, 54, 77a, 146, 469, 625, 730
-fa. of *ʾs²s²*, KJB 64, 190
-fa. of *ʿlmt*, KJC 708
-fa. of *knn*, KJA 314, KJB 65, KJC 457, 687
-s. of *ʾmn*, KJA 10, KJB 62
-fa. of *ʾs²s²*, KJB 6
-s. of *ftḥt*, KJB 95
-fa. of *knn*, KJB 7

ʿlṭt KJB 176, KJC 113, 185

ʿlf KJA 209

ʿlfn -fa. of *--k°* -s. of *sm*, KJB 137

ʿlm -fa. of *brd*, KJC 329

ʿ*(l)mtᵒ* -s. of *ʿlṭ*, KJC 708

ʿ*lᵒn* -fa. of *ʾrs²t*, KJA 170

ʿ*ly* -fa. of *ʿm*, KJA 35
-s. of *ʾṣfr*, KJC 641

ʿ*lyn* KJA 213, KJB 54, KJC 345
-s. of *qnt*, KJB 121

ʿ*m* KJA 174, 336
-fa. of *ʿbdt*, KJA 194
-s. of *-hzm*, KJA 176
-s. of *ʾʿbd*, KJC 274
-s. of *ʿbdt*, KJA 194
-s. of *bglt*, KJA 191
-s. of *ʿly*, KJA 35

ʿ*mdn* -fa. of *bnyt*, KJC 147d

ʿ*mr* KJC 361a, 711
-fa. of *whblh*, KJC 255
-s. of *ʿbs¹*, KJC 267

ʿ*mr ʾl* KJC 400

ʿ*mrn* KJC 427

ʿ*n* KJB 152, KJC 399, 414

ʿ*n ʾl* -fa. of *ʾḫ ʾb*, KJC 282
-fa. of *ġṯlh*, KJB 63

ʿ*nᵒq* KJB 13

ʿ*nl* KJC 429

ʿ*nn* KJC 465

ʿ*hl* -fa. of *s¹m*, KJA 97

ʿ*hn* KJC 57
-fa. of *ʾrs²lh*, KJA 108
-s. of *tm* -fa. of *ʾs¹*, KJC 270

ʿwḏ KJB 171, KJC 551
-s. of *ʿṯft* -fa. of *qnt*, KJC 502

ʿwr -s. of *ʾmrt* -s. of *s¹lm*, KJC 438

ʿy -s. of *zdʾl* -fa. of *ḥrm*, KJC 13

ʿyḏ -s. of *ḏʾb*, KJC 333

ʿyl KJA 135, KJB 103, KJC 285, 571, 683, 702

ʿyln KJC 630

ġtb KJC 382

ġtm KJC 653

ġṯ KJA 68, 75, 81
-s. of *ʾdd*, KJA 182
-s. of *zhy*, KJA 34

ġṯrn KJA 301

ġṯlh KJA 24
-s. of *ʿnʾl*, KJB 63

ġrb -s. of -*ʿl*, KJA 343

ġrṯm KJA 224, KJB 123, KJC 416
-s. of *nht* -s. of *ʾġnt*, KJA 270, KJC 75
-s. of *mqẓ*, KJA 83

ġs¹m KJC 178, 189, 434

ġfrt KJC 604

ġlb KJC 365
-s. of *s²b-*, KJC 368
-s. of *s²by*, KJC 395

(ġ)m -fa. of *tm*, KJC 667

ġn KJA 311

ġnʾ KJA 272

ġnṯ KJA 66, 140, 229, 238, KJC 306, 356, 418, 674, 745, 748

ġnmt KJC 459, 460, 475, 478, 479, 547

ft -fa. of *s¹lm*, KJC 675
-fa. of *mṣry*, KJC 713

fṯḫ KJA 165
-s. of *gḥfl*, KJB 172
-s. of *bhʾ* -s. of *ʾs¹lm*, KJA 17
-s. of *nḫr* -fa. of *mṣry*, KJA 139

fṯḥt KJC 487
-fa. of *ʾmn* -fa. of *ʿlṭ*, KJB 95
-fa. of *krt*, KJA 111, KJC 307
-fa. of *qrs²*, KJB 132
-s. of *ṭyq* -fa. of *ʾmn* -fa. of *ʿlṭ*, KJB 7

ftyt KJC 39, 237, 444, 543, 635
-s. of *ʾ-wr*, KJC 680
-s. of *s² ʿn*, KJC 690

fḫtn KJA 93a, KJC 676b
-s. of *s¹ ʿd*, KJB 112

fḫn KJB 118

fr KJC 513

frds¹ KJA 326

frs¹ -fa. of *zḫn*, KJA 7

fṣyt KJC 225, 227, 300, 450, 454, 690a

fḍg KJB 111, 136, KJC 105
-s. of *nġl*, KJC 92

fḍn KJA 246, KJC 217

fṭ -fa. of *ʾrs²*, KJC 396

flṭt KJC 228
-fa. of *ḥrs¹t*, KJA 208

fnd KJC 181

-s. of *ʾḫʾb*, KJC 4, 283

qt KJA 308

qṯ -s. of *tm*, KJC 394

qdmt -s. of *ḥlʾt* -fa. of *brḥt*, KJC 147j

qrs[1] KJA 71, 87, 180, 288, KJC 116, 117

qrs[2] KJC 695
-s. of *krt* -s. of *ftḥt*, KJB 132

qrfz KJB 179

qʿt KJB 160

qn KJA 63a, 105, 134, 162, 279, KJC 112
-fa. of *s*[1]*ry*, KJB 33
-fa. of *s*[1]*mʿn* -fa. of *ḏʾb*, KJA 44, KJB 174
-fa. of *s*[2]*brmt*, KJA 107
-fa. of *qn*, KJA 184
-fa. of *qnt*, KJA 1
-fa. of *qnm*, KJC 672
-s. of *ṯtmt* -fa. of *wrl*, KJA 31
-s. of *qn*, KJA 184 -s. of *ms*[1]*kt* -fa. of *zm*, KJA 341
-fa. of *s*[1]*mʿn* -fa. of *ḏʿb*, KJA 49, KJB 156
-s. of *wrl* -s. of *qn* -s. of *ṯtmt*, KJA 31
-s. of *wrl* -s. of *ʿkl*, KJA 138

qnt KJA 151
-fa. of *ʿlyn*, KJB 121
-fa. of *mgʾ* -fa. of *ṣhbt*, KJC 118
-fa. of *ngʾ* -fa. of *ʾṣlḥ*, KJC 391, 452
-fa. of *wʿl*, KJA 215
-s. of *ʿwḏ* -s. of *ʿṣft*, KJC 502
-s. of *qn*, KJA 1

qnʿ KJA 274

qnft KJC 472

qnlh KJA 144, KJC 77, 258, 432, 637, 660
-fa. of *grmt*, KJB 143

qnm KJB 16, 67

-s. of *qn*, KJC 672

qy KJA 164

qym KJA 319, 664

qymt -s. of *s*^{1}*ʿd*, KJA 74, KJB 115, KJC 665

qyml KJB 127

kʾt KJA 265, KJC 14, 265
-s. of *[g]fft* -s. of *bnyt*, KJC 147d

kbr KJA 85, 205, KJC 673

kbl KJC 537

ktbt KJB 167
-s. of *ḫrm*, KJB 85

kr -fa. of *drs*^{1}*t*, KJB 92

krt KJA 90, 181
-fa. of *ḫl*, KJA 83
-fa. of *drs*^{1}*t*, KJA 258
-s. of *ftḫt*, KJA 11, KJC 307
-fa. of *qrs*^{2}, KJB 132

krtm KJB 104a

krrt -fa. of *klf*, KJC 174

krh -fa. of *wʿl*, KJC 280
-s. of *tbr*, KJC 716a

kzn KJC 366

kzy KJC 398

kš^{1} KJC 15

ks^{1}*by* KJC 590

ks^{1}*y* -fa. of *ns*^{2}*r*, KJA 150

kʿm KJA 219, KJC 52

klb -fa. of *ms¹kt*, KJA 353

klf -s. of *krrt* -fa. of *ʾṯḫd*, KJC 174

km KJA 232, KJC 229
-fa. of *bṣṣ*, KJA 331
-fa. of *dʿbt*, KJC 47a
-s. of *ʾs¹lm*, KJA 237
-s. of *ʾns²*, KJB 130

kmʾt KJA 259, KJC 609, 657

kms¹ᵖ KJC 535

kmn KJA 119, KJC 259

kmnt -s. of *ṯyq*, KJA 245

kmy -s. of *tmlh*, KJA 132, KJC 575

knn KJB 20, KJC 38, 165, 384, 406, 553
-s. of *bnʾmt* -fa. of *s¹ry*, KJB 110
-s. of *ʿlṭ*, KJA 314, KJB 65, KJC 457, 687
-s. of *ʾmn* -s. of *ftḫt*, KJB 7

khl KJA 354, 357, KJC 524
-s. of *s¹ny*, KJB 135, KJC 389, 718, 722
-s. of *gtt* -s. of *hml*, KJC 443

lʾm KJC 431, 501

lbʾt -s. of *nʿm*, KJC 701

ltb KJC 324

lt KJA 114, 142, 230, 348, KJC 68, 121b, 147h, 231, 317, 360, 410, 744
-s. of *ʾs¹lm*, KJA 37

lgm KJA 11, KJC 677

ldf KJC 260

lġfn KJB 9

lht -s. of *ʾs¹lm*, KJB 30, KJC 321, 750

lhm KJC 578

lhmt KJC 770

m(ʾ)y KJB 180a

mbʿl KJA 188, 266, 295, 356, KJB 31, 41, KJC 74, 79, 120, 121a, 129, 210, 336, 426, 726, 728

mtr -fa. of *brd* -fa.of *ʾnʿm*, KJA 332, KJC 638
-fa. of *bnʿmh*, KJA 313
-fa. of *ḥrm* -fa. of *ʾsˡmnt*, KJA 84, KJC 176, KJC 370, 700
-s. of *ʾṯḏd* -fa. of *brd* -fa. of *ʾnʿm*, KJC 114, 174

mtʿ KJA 328, KJC 305, 332

mtn KJA 54

mtnʿ -s. of *ʿbd*, KJB 26

mty -s. of *rfʾy*, KJA 250, KJC 322, 738, 755

mgʾ -fa. of *ṣhbt*, KJC 180
-s. of *qnt* -fa. *ṣhbt*, KJC 118

mgn̊ KJC 122a

mḥllt KJA 344, KJC 470

mḥwr -s. of *ʾsˡlh* -s. of *ḥrgt* -s. of *wtr*, KJA 30
-s. of *ʿbdʾlḥwr*, KJC 202

mḫr KJA 257
-s. of *bnʾmt* -s. of *nʿmy*, KJA 94

mr KJA 33

mrʾ KJC 235

mrʾmnt KJA 32
-fa. of *mṯy*, KJA 236

mrḫ KJC 560

msˡʿd KJB 104, 131, KJC 9, 91, 383, 494, 538

-s. of *wfṣ*, KJC 480

ms¹k -s. of *ʾʿfr* -fa. of *ḥt*, KJC 147i

ms¹kt -fa. of *qn* -fa. of *zm*, KJA 341
-fa. of *s¹m ʿn*, KJB 156
-s. of *s¹ʿd* -fa. of *qn*, KJA 49
-s. of *klb*, KJA 353

ms¹lm -fa. of *ʾs¹lm* -fa. of *bhʾ*, KJB 47
-fa. of *ḥrs¹*, KJC 522
-fa. of *ṣḥb*, KJB 158

ms² KJC 413

mṣry KJC 26
-s. of *ft*, KJC 713
-s. of *ftḥ* -s. of *nḫr*, KJA 139

mṭr KJA 43, 302, 346

mṭy KJA 69, 75, KJB 24, KJC 137, 362
-s. of *grm* -s. of *zdʾl*, KJB 22
-s. of *mrʾmnt*, KJA 236

mʿ KJC 130

mʿz KJB 86, KJC 145, 555

mʿzy KJC 729

mʿs¹ -s. of *ʾdd*, KJC 588

mʿl KJA 13

mʿn KJA 78, KJC 351
-fa. of *s¹ʿd*, KJC 187

mġṯ KJA 196

mġny KJA 72, KJB 91, KJC 303, 673a, 732
-s. of *hn*, KJB 70
-s. of *hwn*, KJB 116

mqẓ -s. of *ʿrb* -fa. of *ʾġnt*, KJA 83

mqmʾl -s. of *s¹r*, KJB 133

mks¹ KJA 4

ml KJC 569, 753

mlgn KJC 8, 273, 760, 762

mlgnt KJC 44

mlk -fa. of *ʾnʿm*, KJA 189, 305, 309

mly KJC 436a

mn KJA 240

mnʿ KJC 731

mnʿs¹ KJA 166a

mnh KJA 92

mhṣ KJA 19, 59, KJC 58
-fa. of *grf*, KJA 21, 46
-fa. of *ḥg*, KJA 128, KJC 686
-s. of *ʾs¹y* -fa. of *ʿrhz*, KJC 29

nb(r) KJC 193

nbṣlh KJB 76

nbṭ -fa. of *bns²br*, KJA 138

ngʾ -fa. of *ʾs¹lḥ*, KJA 152
-fa. of *s¹ʿd*, KJB 175
-s. of *qnt* -fa. of *ʾs¹lḥ*, KJC 391, 452

ngʾt KJB 129, 142

nǧf KJC 402

ngl KJA 9, 89

nḫr -fa. of *fṭḥ*, KJA 139

nḫy -fa. *s¹dn* -fa. of *ʾmn*, KJC 126

nr KJC 621

nrt KJC 184

ns² KJA 342

ns²r -s. of *fl* -fa. of *bẓry*, KJC 291
-s. of *ksy* -fa. of *yb*, KJA 150

ns²l KJB 147
-s. of *zrt* -s. of *nwy*, KJC 620

nṣr KJC 214

nṣrlh KJC 468

nṣlt KJA 22, 29a, 136

nṭt° -fa. of *ṭyq*, KJB 7

n ʿm KJA 282
-fa. of *lb ʾt*, KJC 701

n ʿmy -fa. of *bn ʾmt*, KJA 94

nġl -fa. of *fḏg*, KJC 92

nqtṣ KJC 28

nkf KJB 183

nmr KJA 243, KJC 286

nms¹ KJB 50

nhb KJA 42, 45, 96

nht KJA 29
-fa. of *tm ʾl*, KJA 202
-fa. of *bgt*, KJC 508
-fa. of *ḫḏmn*, KJA 231
-s. of *ʾġnt* -fa. of *ġrṭm*, KJA 83, 270, KJC 75

nhk -fa. of *ʿl*, KJC 597

nhl˚ KJC 463

nwy -fa. of *zrt*, KJC 620

hbṯ KJA 121

hṯm KJC 422

hg KJC 676

hgn KJB 157

hd KJC 170
-s. of *s¹m ʿn*, KJC 539

hḏr KJA 56
-fa. of *w ʿl*, KJC 7

hr KJC 352

hs¹ KJA 218

hkdn KJC 500

hkn KJC 276

hm KJC 369

hmrʾ KJB 180

hml -fa. of *gṯṯ*, KJC 443

hn -fa. of *mġny*, KJB 70

hnʾ KJA 23, 28, 157, 197, 351, KJB 102, 106a, 139, KJC 86, 93, 194, 240, 344, 379, 576, 623, 679
-fa. of *tnn*, KJA 48
-s. of *zdqm*, KJA 27, 99, 300, KJB 105, 173, 177
-fa. of *tnn*, KJC 758
-s. of *zdqm* -s. of *ʾʿbd* -s. of *ʿkl*, KJB 110

hnʾlh KJC 31, KJC 557
-s. of *tmlḫwr* -s. of *whblh*, KJC 2
-s. of *wddʾl* -fa. of *zdlh*, KJC 5

hnṅ˚ KJC 710a

hhd KJC 663

hwn -fa. of *mġny*, KJB 116

hyḏ KJC 243

wʾl -s. of *sʿdlh*, KJB 179
-s. of *hḏr*, KJC 7

wb KJA 61, 339, 754

wtr KJB 48
-fa. of *ḫrgt*, KJA 30
-fa. of *s²bt*, KJB 19

wgdt -fa. of *[t]m*, KJA 355
-fa. of *tm*, KJC 218

wḥg -s. of *ḏky*, KJA 212, KJC 315

wḥf KJB 113a, KJC 102, 610

wdd -s. of *ʿlt*, KJA 228

wddʾl -s. of *blqt* -fa. of *hnʾlh*, KJC 5

wrl -s. of *ʿkl* -fa. of *qn*, KJA 138
-s. of *qn* -fa. of *qn*, KJA 31

ws¹q KJC 689

wḏʾ -s. of *zhmn* -fa. of *ẓnn*, KJA 138

wʿḏ -fa. of *ḥzyt*, KJA 318

wʿl KJC 346
-fa. of *krh*, KJC 280
-s. of *qnt*, KJA 215
-s. of *hḏr*, KJC 7

wfṣ -fa. of *ms¹ʿd*, KJC 480

wqf KJC 167

whb KJC 62, 196

whbʾḥwr -s. of *bẕry* -s. of *ns²r*, KJC 291

whbʾl KJB 182, 392

whbl KJC 581

whblh KJC 624
-fa. of *tmlḥwr* -fa. of *hnʾlh*, KJC 2
-fa. of *yḏr*, KJA 36
-s. of *ʿqrb*, KJA 254
-s. of *ʿmr*, KJC 255

yʾl KJC 201

yb -s. of *ns²r* -fa. of *s²br*, KJA 150

ytr° -fa. of *s¹dl*, KJC 297

ygq KJC 28

yḫld -s. of *bns²br* -fa. of *zhmn*, KJA 138

yḏr -s. of *ʿbd* -s. of *yḏr* -s. of *whblh*, KJA 36
-s. of *whblh* -fa. of *ʿbd*, KJA 36

yḏmtn KJC 720

yrfn KJC 239, 567

yẕr KJC 133, 490, 505
yġṯ KJA 123, 159
-fa. of *ḥby*, KJC 24

yqm KJA 95, KJC 147c, 149
-s. of *ʾ-y*, KJA 299

Genealogies which occur in both the *Wādī Judayyid* texts and in other parts of the *Ḥismā* desert of Jordan:

ʾḫʾb bn ʿnʾ! KJC 282
" AMJ 114 *Wādī Ḥafīr*, *Jabal ʿAmūd*

ʾs¹mnt bn ḥrm bn mtr KJA 84 etc.
" " TIJ 83 E. side of *Wādī Ramm* 3049 II 353736

ʾnʿm bn brd KJA 190 etc.
ʾnʿm bn br[d] AMJ 68 *Wādī Ḥafīr*

ḥgg bn bglt KJB 77, KJC 5 + additional generations
" AMJ 52 *Wādī Ḥafīr*

s²brmt bn s¹mʿn bn qn KJB 107
" " TIJ 269 *ʿAin al-Wujayhāt* 3049 II 343769

ʿlt bn wdd KJA 228
" AMJ 76 *Wādī Ḥafīr*

ʿlyn bn qnt KJB 121
ʿlyn bn qnt bn nʿmy bn rbqt bn ʿrk bn ʿbd AMJ 131 *Wādī Ḥafīr*

kʾt bn [g]fft bn bnyt bn ʿmdn KJC 147d
w kʾt bn gff[t] ḫṭṭ AMJ 58 *Wādī Ḥafīr*

lṯ bn ʾs¹lm KJA 37
" AMJ 79, 117 *Wādī Ḥafīr*

mty bn rfʾy KJA 250 etc.
" TIJ 298 *ʿAin al-Wujayhāt* 3049 II 34369

Appendix 2

Published Hismaic Texts

AMJ

The AMJ texts listed below are those that have been published by Dr. W. Jobling in various preliminary reports on the work of the *ʿAqabah-Maʿān* survey. Because the publication of the texts is so dispersed I have included them all, even when I have nothing to add to Jobling's reading. There are several texts that appears on the published photographs that have not been read by Jobling, these are included as well. The texts that are now in the Amman and Kerak museums have been checked by Mr. Michael Macdonald and myself, otherwise, the readings are made on the basis of the published photographs. There are some inscriptions collected by the survey and now in the museums that have not been published, these have been given a number although no comment has been made on them. The texts have been given the siglum AMJ (*ʿAqabah-Maʿān*) with the first letter of the editor's name attached to the end. This is to prevent confusion with the works of Father A. Jamme where a J is prefixed to the abbreviations of his publications.

TIJ 311 = Jobling 1982(a) Pl. LVI

1 Jobling 1982(a): 202 n.6 + Pl.LVII.
Jobling 1983(c): 32 + Fig.8
l rṯ bn tm

2 Amman Museum Reg.No. J.14202
Unpublished. The text is mentioned in Jobling 1982(a): 202 and Macdonald 1980: 200.

3 Jobling 1982(b): 469 + Pl.112,3.
l ʾbrq bn ḥddn bn tmlh

4 Kerak Museum Reg.No. 82-300.
Jobling 1983(a): 189 + Pl.XXXV,1 (S.A. 06B 31)
Jobling 1982(b): 469 + 113,4.
l ṣwm
The first letter is a *ṣ* rather than *ḫ* as read by Jobling.

5 Jobling 1983(a): 192 + Pl.XXXVIII (W.L. 14B/4)
Jobling 1982(b): 469 + 113,5
l tmʾs¹ ṭs¹rt ʿṣ°f byt w ḍy
By *tmʾs¹* ------and he spend the night and took refuge
The interpretation of the central part of the text is uncertain. The eleventh letter might be a *ṣ* as read by AMJ although it would be an unusual shape. The curved top of the letter might have been added later, in which case the letter would be *z*. *byt*, cf. Ar. *bāta* 'spend the night'. *ḍy* might be translated from Ar. *ḍwy*, *ḍawā* 'take refuge, come by night'. One would expect the second radical to be represented orthographically in either the perfect or active participle, although *ḍayy* occurs in Ar. as a verbal noun, cf. the occurrence of *ḍy* in KJC 46.

6 Kerak Museum Reg.No. 82-301

Jobling 1983(a): 192 + Pl.XXXVII,2
l ʿṣm

7 Jobling 1983(a): 192 + Pl.XXXVI,2
Jobling 1982(b): 113,6; Jobling 1983-1984: 270 Fig.27
l ḥgg
The text is painted on to the rock.

8 Jobling 1983(b): 205 + Pl.XL,2 (AM 83/26B/17)
Campetti and Löwenstern 1983: Pl. XXXVIId
w s²ḥdd ḫṭṭ
And *s²ḥdd* is [the] inscriber

9 Jobling 1983(b): 205 + Pl.XLIV,1 (AM 83/20B/18A)
ʾlq
The text is not Hismaic

10-13 Kerak Museum Reg.No. 83-358
Jobling 1983(b): 205 + Pl.XLIV,2 (AM 83/35B/6 Nos.1-4)

10=1 *l zhwd bn lḥd*
The second letter consists of two parallel lines joined by a short stroke across the middle.

11=2 *h ḏs²ry lʿtbʿ*
O *ḏs²ry* [grant?] to *tbʿ*
Macdonald 1986: 111 + 142 n.75 mentions the deity's name *ḏs²ry*.
The text turns at a right angle after the *l* and the last three letters are read in the edition with AMJ 12. The *l* has not got a hook and the second letter of the proper name is a slightly curved stroke. It is different from the *s²* and *r* of the text, which are both quite distinctive, and, in this instance, I would suggest reading a *b*. For this type of prayer, see Ch.4.C.3.

12=3 *fbr*
The text reads down towards the end of AMJ 11. Possibly AMJ is correct in suggesting that the first letter should be interpreted as 'and' in which case the text would read *f br* 'And *br*'. This would be the first instance of a name being introduced by *f*, although the particle introduces a verb in KJC 140 and there are several instances where *w* occurs at the beginning of a text before a name, see Ch.4.A.3.

13=4 *l ykbr*

14 Kerak Museum Reg.No. 83-359
Jobling 1983(b): 205 + Pl.XLV,1 (AM 83/35B/7)
bnḫmr

15-24 Kerak Museum Reg.No. 83-357
Jobling 1983(b): 206 + Pl.XLV,2 (AM 83/30/8A nos.1-10)

15=1 *l krt [] b*
There is a dot after the *t* which I would take as extraneous and a *b* inscribed below the *t* of the name which might be a start at continuing the text, abandoned because of the lack of space.

16=2 *l ʾwfʿ*
The last letter is a slightly wavy line. It is possible that it should be read *s²*.

17=3 *l wʾr*

The *w* has been partially hammered over.

18=4 *l qnt*

19=5 *l mʿn*

20=6 *l ʾkbr*

See AMJ 23.

21=7 *l ns²g*

22=8 AMJ reads *s²ʿ* but I think the line and circle are probably not a text, cf. the lines to the left of AMJ 18.

23=9 *bn ḫdt[ ]*

There is a dot after the *t* but it does not appear to be as definite as the rest of the letters. I think it is quite likely that this is a continuation of AMJ 20, judging by the technique of inscribing, although such a reading would only make sense on the assumption that AMJ 21 and 24 were inscribed first leaving *ʾkbr* little space to write his patronymic directly after his name.

24=10 *l mll*

The first letter has not got a very distinctive hook and I would read the last two letters as *l* rather than *s²*, as in the edition.

25 Kerak Museum Reg.No. 83-361

Unpublished.

26 Kerak Museum Reg.No. 83-360

Jobling 1983(b): 206-207 + Pl.XLVI,1 (AM 83/40B/31)

[l] ḏbʿt bn ng(y)

The rock has been broken since being taken to the museum.

27 Kerak Museum Reg.No. 81-299

Unpublished.

28 Jobling 1983(a): 188 + Pl.XXXIV

The text is not read by AMJ. It is not Hismaic.

29-30 Amman Museum Reg.No. 14540.

Unpublished.

31 Jobling 1984(a): 195 + Pl.XLI,1 (AM 84/48/28-29)

l ʾs¹wr

32-41 Jobling 1984(a): 195-197 + Pl.XLI,2 (AM 84/54/11 nos.2-11); Jobling 1984(c), Pl.86.2

32=2 *l ʿmʾl*

33=3 *l dll*

34=4 *l qrs²m*

The *s²* is indistinct on the photograph.

35=5 *l ḫbʾt bn ʿmr*

36=6 *l brs²t bn ṣʿdt*

37=7 *l ʾs¹rk bn zdʾl*

38=8 *l ʾqm*

39=9 *l ftḫt bn ʿ*

39a=9 *l tmʾl*

AMJ reads 39 and 39a as *ftḫt bn ʿs²k mt* '*ftḫt* son of *ʿs²k* has died'. There is clearly a *l* before the *f* on the published photograph and I would read the first nine letters as one text. It is either unfinished or possibly a further letter is obscured by

the long hammered line after the ʿ. The remaining letters are inscribed in a different technique to those above and do not belong to them. They should be read from right to left as *l tmʾl*. The *l* before the *t* is clear on the photograph.

40=10 *l tmʾl*

AMJ 39a, which also reads *l tmʾl*, is written directly after this text.

41=11 *l ʿmrt bn ʿmʾt*

The last name is not on the photograph and cannot be checked.

Jobling 1984(a): 197-198 + Pl.XLII (AM/84/56/7)

42 *hʿtrs¹m s¹ʿd ḫṭf w ʿly w ʿd w gdd*

AMJ's reading cannot be checked on the published photograph. The text is most probably Tham.B.

43-44 Jobling 1984(a): 198 + Pl.XLII,2 (AM 84/52/30 nos. 1-2)

43=1 *l ʿbd bn whblh bn s¹ḫl*

44=2 *l mnʿt bn mrʾgd bn mnʿt bn ʾfṣy*

45-50 Jobling 1984(a): 198-200 + Pl.XLIII,1 (AM 84/52/MB nos.1-6)

45=1 *l whblh bn hnlh bn ḥbb bn rgʿ*

46=2 *l ḥbb bn bnlh bn ḥbb w ḏkr ds²r s²kmlh w ḥbb ḫṭṭ*

By *ḥbb* son of *bnlh* son of *ḥbb*; and may *ds²r* remember *s²kmlh*, and *ḥbb* is [the] inscriber

= AMJ 147. See. Ch.4.C.1, for this type of prayer.

47=3 *l ʾrs²*

48=4 *l gḥs² ? bn qbbt*

The reading cannot be checked on the photograph. AMJ has *ṯḥs¹* for the first name where presumably the first letter should be corrected to *g*. Possibly *s¹* is a misprint for *s²* in the text of the edition, *gḥs²* is a fairly common name in the Hismaic texts form this area, see the Index of names.

49=5 *l whblh bn hnlh bn ḥb(b) bn rgʿ b---*

The last letter of the third name looks like a *k* in the photograph but the name *ḥbb* is clear in AMJ 45 which has the same genealogy. The end of the text cannot be checked from the photograph.

50=6 *l kʿb*

The first letter is indistinct on the photograph.

Jobling 1984(a): 200 + Pl.XLIII,2 (AM 84/45/33)

51 *l ʿmʾl bn ʿmrt*

52-53 Jobling 1985: 214-215 + Pl.XLIII (AM 83/37/22 nos.1-2); Jobling 1984(b): 46-47 + Pl.4

52=1 *w ḥgg bn bglt ḫṭṭ kll*

And *ḥgg* son of *bglt* is [the] inscriber of all [of it]

53=2 *l ʾmn bn s¹mdt*

54-56 Jobling 1985: 215 + Pl.XLVI (AM 85/93/25 nos.1-3)

54=1 *w ṯḥbb ḫṭṭ*

And *ṯḥbb* is [the] inscriber

The text is not by a woman as suggested by AMJ as the word *ḫṭṭ* does not have a feminine ending.

55=2 *w ġlmt ḫṭṭ h w ʿl kll*

And *ġlmt* is the inscriber of the ibex all [of it]

The second letter which has a distinct curving tail is a *ġ* and not a *s*[1].

56=3 *l ḫglt*
AMJ drawings Jobling 1985: 215 + Pl.XLIV (AM 85/83/15)

57-66 Jobling 1985: + 215 Pl.XLVII (AM 85/83/15 nos.1-2).
Only two of the texts in the photograph have been read by AMJ, AMJ 57-58.

57=1 *l kʾt h gml*
BY *kʾt* is the camel

58=2 *w kʾt bn gff[t] ḫṭṭ*
And *kʾt* son of *gff[t]* is [the] inscriber
The *t* has been restored in the patronym on the basis of the name in KJC 147d.

59 *[l] mẖd*
Written between the neck of the large camel and its hump. An initial *l* is probably obscured by the rein of the camel.

59a *l kʿ°t*
Below AMJ 59. The second letter might be a *ṭ*, although, probably, the apparent lower arm belongs to the outline of the camel. There is a line after the *t* but it is less distinct than the rest of the letters.

60 *l ḫwr°*

61 *l gdlt*

62 *l mgs*[1]

63 *l zhr*

64 *w (n)ṣ s*[2]*gy f bt blgt ʿl h ḫml*
And *s*[2]*gy* fled and was [here] at dawn on the tract of sand with pasture
The second letter is rather long and slightly curved. It might be a *r* facing backwards but it is more likely that the lower 'nick' is a chip that flaked away during the inscribing of the dash of a *n*. The *b*'s are all facing downwards even though the text is written horizontally. *nṣ*, cf. Ar. *nāṣa* 'flee'. Ar. *bāta* means 'spend the night' (cf. *byt* in AMJ 5) but, if it is translated with that meaning here, it is difficult to see how the rest of the text should translate. Perhaps it should be taken here with the meaning 'was', cf. Lane 279b, *bāta bimawḍiʿ kaḏā* 'he was in such a place'. *blgt*, cf. Ar. *baljah* 'the light of dawn'. The word would be an adverbial accusative. It is less likely that *b* should be taken as the preposition *bi* with the meaning 'with' and *lgt* read either as a proper name or as a substantive, cf. Ar. *lujjah* 'a numerous assembly, troop'. Ar. *ḫamīlah* means 'a tract of ground producing good pasture or trees' and probably *ḫml* should be translated here with a similar meaning. *ḫmlt* occurs in Saf. WH 1771, 3093, 3691b and *ʾḫml* in ISB 438.

65 *l gs*[2]*mt*
Written down to the right of th rump of the camel.

66 *l mrʾʿzy bn ms*[1]*kt°*
The *t* is indistinct on the photograph.

67-70 Jobling 1985: 216-217 + Pl.XLV (AM 85/100/12).
Only one text, AMJ 67, is read in the edition.

67 *l zḥn bn ---- bn ʿm ḫṭṭ gml*
By *zḥn* son of ---- son of *ʿm* is the drawing of a camel

The first *n* is clear on the photograph. The second name is completely covered by a more recent drawing of a camel. *zḥn bn bnyt bn ʿm* occurs in an unpublished text from the norht of the area.

68 *l ʾnʿm bn br*

There is no letter after the *r* in the photograph but the name *ʾnʿm bn brd* occurs frequently in the *Wādī Judayyid* texts.

69 *l kʿm bn s¹ʿd bn zk-*

It is possible the third name continues.

70 *l dđʾyl*

The second and third letters are circles with lines at either end but not going through them. Both letters might equally be *q*'s. The tail of the *y* is indistinct.

71-75 Jobling 1986(b): 243 + Fig.98-99 (AM 85/96B/16 nos.1-5)

71=1 *l ḥrs¹ bn qdm bn rʿ*

72=2 *l zdlh*

73=3 *l bnn*

74=4 *l bʿlh*

As AMJ, although it is possible the second letter should be read *r*.

75 *l grt ḫṭṭ bn zdmnt*

By *grt* is [the] drawing son of *zdmnt*

I would read the patronym at the end of the text rather than after the first name as AMJ, see Ch.4.B.2.

76-101 Jobling 1986(b): 243 + Fig.100-101 (AM 85/91B/6 nos.1-25); AMJ 101 is not read in the pubication.

76=1 *l ʿlt bn wdd*

77=2 *l ʿmrn bn ft*

It is possible the text continues under a drawing of an ibex.

78=3 *l ʾs²rs¹*

79=4 *l l̲t bn ʾs¹lm*

80=5 *l ʾrs²*

AMJ's reading of the final letter as *s¹* is probably a misprint.

81=6 *l mr ʾlh*

82=7 *l ḏr*

83=8 *l ʿwḏlh*

84=9 *l m(r)*

The *r* is slightly damaged.

85=10 *l mṭlʿ*

The final *l* is less distinct than the other letters of the text.

86=11 *l s¹rqt*

It is possible that *bn ngr* written to the right belongs with this name and not with AMJ 87.

87=12 *l bnbs¹r bn ngr*

See under AMJ 86.

88=13 *l lb ʾt*

90=14 *l btlt*

90a=15 *l s¹lmt bn ʿmr ʾl*

91=16 *l mrḫt*

92=17 *l bthdt*

The reading of this seems clear on the photograph, although I would read it as a compound name rather than translate *bt* as daughter. The name would nevertheless be feminine and parallel to masculine names compounded with *bn*.

93=18 *l rhs¹ bn s¹by*

AMJ reads *s¹ry* for the last name, however, comparison of the letter with the *r* and *b* suggests it is a *b*.

94=19 *l tkl*

95=20 *l mrʾlh*

96=21 *l ṯwʿt*

97=22 *[l] ḫy (b)n gʾnʿ*

AMJ reads *d yzng(?)* and translates 'This is *yzng*'. The *d* in the edition is probably a misprint for *ḏ*, although I would prefer to read the letter as *ḥ*. The fourth letter is not a *z*, although, again, this might be a printing mistake for *ẓ*, which would be a possibility. I think, however, the letter is more likely to be a badly formed *b*. The *ʾ* and *n* at the end are not entirely clear on the photograph.

98=23 *lʾfḏḥ*

The does seem to be a *l* before the *f*, although it is rather short. *fḏḥ* is a proper name and not, as AMJ seems to suggest, a substantive meaning 'disgrace' or 'dawn'.

99=24 *l bṭʾ*

100=25 *l s¹kn*

The second lettr may be a *r* as the tail seems to be shallower and not quite attached to the rest of the letter.

101 *l qn*

The text is not read by AMJ. It is written above and slightly to the left of AMJ 100.

102-103 Jobling 1986(a): 261 + Pl.XLVIII,1 (AM 82/9B/15 nos.1-2)

102=1 *l ʿbd*

103=2 *l ngm bn ʾs¹lh*

104 Jobling 1986(a): 262 + Pl.XLVIII,2 (AM 83/32B/10)

l bnt bn zdʾl ḏ ʾl ʿmt

By *bnt* son of *zdʾl* of the tribe of *ʿmt*

105 Jobling 1986(a): 261-262 + Pl.XLIX,1 (AM 83/32B/7)

l mr bn ʾṯḫd

106-109 Jobling 1986(a): 262 + Pl.XLIX,2 (AM 83/32B/15 nos.1-4)

106=1 *l grm*

107=2 *l ʾrs² bn flṭ*

108=3 *l ḏr*

109=4 *l nhm bn dql*

110 Jobling 1986(a): 262 + Pl.L,1 (AM 83/36B/26)

l ṣṣrt bn ʾrs²

111 Jobling 1986(a) 263 + Pl.L,2 (AM 83/36B/29)

l ṣṣrt ḫṭṭ

By *ṣṣrt* is [the] drawing

112-114 Jobling 1986(a): 263 + Pl.LI,1 (AM 85/71B/30 nos.1-3)

112=1 *l hrb bn qrḫ°bn*

The reading of the second *r* and *ḫ* are doubtful. The text appears to be unfinished.

113=2 *l s²ʿlh*

114=3 *w ʾḫʾb bn ʿnʾl ḫṭṭ kll*

And *ʾḫʾb* son of *ʿnʾl* is [the] inscriber of all [of it]

115-116 Jobling 1986(a): 263 + Pl.LI,2 (AM 85/99B/21 nos.1-2)

115 *l s²nʾt*

116 *[l] [s¹]ʿdn bn ngʾt*

117 Jobling 1986(a): 263 + Pl.LII,1 (AM 85/83B/19)

l l̲ṭ bn ʾs¹lm

118-119 Jobling 1986(a): 264 + Pl.LII,2 (AM 85/87B/14 nos.1-2)

118=1 *l khlt*

119=2 *l ʾs¹wr bn s¹r*

120 Jobling 1986(a): 264 + Pl.LIII,1 (AM 85/97B/8)

l ʾrs²lh bn nhq bn ʾrs²lh

Despite the commentary in AMJ the letters are quite clear, the only doubtful one being the second *r* which is much larger than the first.

121 Jobling 1986(a): 264 + Pl.LIII,2 (AM 85/83B/27)

w tm bn wʿl ḫṭṭ

And *tm* son of *wʿl* is [the] inscriber

122-124 Jobling 1986(a): 264 + Pl.LIV,1 (AM 85/96B/15 nos.1-3)

122=1 *l bnn*

123=2 *l ḏb°n*

The second letter is most likely a *ḏ* with the inner circle filled in rather than an *ʿ* with a dot in the middle, see Ch.2.A under *ḏ* and Ch.2.E.2. AMJ reads *d* for *ḏ* which is presumably a misprint. The third letter might be a *r* rather than *b*.

124=3 *w h ḏs²ry (l) m ʿzy°*

And O *ḏs²ry* [grant ?] to *m ʿzy°*

The *h* was originally left out and has been added to the left of the *w* and *ḏ*. AMJ reads the text *w h ḏs²ry r m ʿz* and translates it 'And O *ḏs²ry* see (the) goats'. It is most unlikely that the imperative of the verb *raʾā* 'see' would lose the medial radical *ʾ* despite the orthography in Ar. (Wright I:93) I would prefer to emend the letter to *l*. There seems to be a *y* after the *z* which is not read by AMJ.

125-130 Jobling 1986(a): 265 + Pl.LIV,2 (AM 85/74B/23 nos.1-4)

125=1 *l wtr bn ʿm*

126=2 *l bnḥrb*

The *l* seems to be less definite than the rest of the text.

127=3 *l ʿkbr*

128=4 *(w) l nṣt bn s¹°mn*

And by *nṣt* son of *s¹°mn*

There seems to be 'half' of a letter *w* running into the back of the initial *l*, possibly the two letters are intended to form a monogramme. The depth of the curve of the eighth letter suggests that it is more likely to be a *s¹* than a *r* as in the edition. There seems to be a tail, slightly shallower than the rest of the letter, coming out at an angle.

129=5 *l ġ̲tlh*

The second letter is clearly a *ġ* and not a *k* as in the edition.

130=6 *l s¹krn bn mbʿl*

The dot read as *n* by AMJ at the end of the last name seems to be much shallower than the rest of the text and I think it is probably natural.

131-133 Jobling 1986(a): 265 + Pl.LV,1 (AM 85/65B/14 nos.1-3)

131=1 *l ʿlyn bn qnt bn nʿmy bn rbqt bn ʿrk bn ʿbd*

132=2 *l s¹mdt bn zdlh bn hnʾlh*

Appendix 5

Elements in Compound Names in Thamudic E
The words in brackets are possible hypocoristic forms.

a:

ʾdb: — *ʾdbʾl*

ʾḏn: — *ʾḏnl**

ʾrs² (*ʾrs²*, *ʾrs²t*): — *ʾrs²lh*

ʾs¹ (*ʾs¹*): — *ʾs¹ʾl*, *ʾs¹lh*, *ʾsmnt*

ʾlf (*ʾlf*): — *ʾlfʾl*

ʾmr (*ʾmr*, *ʾmrt*): — *ʾmrʾl*

bʿ (*bʿ*): — *bʿlh**

bn (*bn*, *bny*): — *bnʾl*, *bnlh*

tm (*tm*, *tym*): — *tmʾḥwr*, *tmʾs¹*, *tmʾl*, *tmgrb*, *tmḥry**, *tmds²r*, *tmʿ*, *tmʿbs²*, *tmʿbdt*, *tmʿbḏt*, *tmktb**, *tmktbʾ*, *tmktby*, *tmlt*, *tmlḥwr*, *tmlh*

gd: — *gdlt**

grm (*grm*, *grmt*): — *grmʾl*, *grmʿ*, *grmlh*, *grmnt**

ḥbb (*ḥb*, *ḥbb*, *ḥbbt*, *tḥbb*): — *ḥbbʾl*

ḥn: — (*ḥn*, *ḥnn*, *ḥnnt*) *ḥnl*

ḫl (*ḫl*): — *ḫlʾl*

ḫlf (*ḫlf*): — *ḫlflh*

dd (*ddh*): — *ddʾl*

dn: — *dnʾlh*

ḏkr: — *ḏkrʾl*

rʾm: — *rʾmlt*

rbb (*rb*, *rbbt*, *rbt*): — *rbbʾl*

rḏ: — *rḏʾl**

rm (*rm*): — *rmʾl*

zd (*zd*, *zdn*, *yzd*): — *zdʾl*, *zdqm*, *zdlh*, *zdmnt*

zrʿ: — *zrʿlh*

zyd (*zyd*, *zydt*): — *zydqm*

s¹ʿd (*s¹ʿd*, *s¹ʿdt*): — *s¹ʿdʾl*, *s¹ʿdl*, *s¹ʿdlh*

s¹q (*ts¹q*): — (*ʿbd*)*s¹qlt*

s¹qlt: — *ʿbds¹qlt*

s¹lm (*s¹lm*, *s¹lmt*, *ys¹lm*): — *s¹lmʾl*

s¹hn: — *s¹hnlh**

s²ʿ: — *s²ʿṯʿ*, *s²ʿlh*

s²km (*s²km*): — *s²kmlh*

ʿbd (*ʿbd*, *ʿbdt*): — *ʿbdʾḥwr*, *ʿbdʾlʾḥwr**, *ʿbdʾlyb*, *bdʾyb*, *ʿbdg*, *ʿbdgd*, *ʿbdgns²*, *ʿbdḥrṯt*, *ʿbdḏs²ry*, *ʿbds¹qlt*, *ʿbdḏn**, *ʿbdʿbdt*, *ʿbdʿzy*, *ʿbdʿmn*, *ʿbdqn*, *ʿbdlg*, *ʿbdlh*, *ʿbdmk*, *ʿbdmnt*

ʿtnl: — *ʿtnl**

ʿl (*ʿl*, *ʿlt*, *ʿly*, *yʿly*): — *ʿlʾl*

ʿm (*ʿm*): — *ʿmʾl*

ʿn (*ʿn*): — *ʿnʾl*, *ʿnl*, *ʾlʿn**

ʿwḏ (*ʿwḏ*): — *ʿwḏlh*

ġṯ (*ġṯ*, *tġṯ*, *yġṯ*): — *ġṯʾl*, *ġṯlh*

fṣ (*fṣ*, *fṣy*, *fṣyt*): — *fṣʾl*

qn (*qn*, *qnt*): — *qnlh*

qym: — *qyml**

mtn (*mtn*): — *mtnʿ**

mrʾ (*mrʾ*, *mrʾn*): — *mrʾgd*, *mrʾʿzy*, *mrʾlh*, *mrʾmnt*, *mrʾyġt*

mʿn (*mʿn*): — *mʿnʾl*, *mʿnlh*

mqm (*mqm*, *yqm*): — *mqmʾl*

mlk (*mlk*, *mlkt*): — *mlkʾl*

nbṣ: *nbṣlh**

nṣr (*yṣr*): — *nṣrlh*

hn (*hn*): — *hnlh*

hnʾ (*hnʾ*, *hnʾt*, *thnʾ*): — *hnʾlh*, *hnʾmnt**

wd (*wd*): — *ʾlwd**

wdd (*wdd*): — *wddʾl*

ws¹m: — *ws¹mʾl**

whb (*whb*, *whbn*): — *whbʾḥwr*, *whbʾl*, *whbl*, *whblh*

b:

ʾḥwr — *tmʾḥwr*, *ʿbdʾḥwr*, *ʿbdʾlʾḥwr**, *whbʾḥwr*

ʾs¹ — tmʾs¹

*ʾktb — m-ʾktb** (See the commentary to KJC 442)

ʾl — ʾdbʾl, ʾs¹ʾl, ʾlfʾl, ʾlʿn, ʾlwd*, ʾmrʾl, bnʾl, tmʾl, grmʾl, ḥbbʾl, ḫlʾl, ddʾl, ḏkrʾl, rbbʾl, rmʾl, rḏʾl*, zdʾl, s¹ʿdʾl, s¹lmʾl, ʿlʾl, ʿmʾl, ʿmrʾl, ʿnʾl, ġṯʾl, fṣʾl, mʿnʾl, mqmʾl, mlkʾl, wddʾl, ws¹mʾl*, whbʾl*

ʿlh — dnʾlh

ʾyb — ʿbdʾlyb, ʿbdʾyb

g — ʿbdg, ʿbdlg

gd — ʿbdgd, mrʾgd

grb — tmgrb

gns² — ʿbdgns²

ḥrṯt — ʿbdḥrṯt

*ḥry — tmḥry**

ḥwr — tmlḥwr, ʿbdʾlḥwr

ds²r — tmds²r

ḏs²ry — ʿbdḏs²ry

s¹qlt — ʿbds¹qlt

*ḍn — ʿbdḍn**

*ʿ — tmʿ, grmʿ, mtnʿ**

ʿbdt — tmʿbdt, ʿbdʿbdt

ʿbḏt — tmʿbḏt

ʿbs² — tmʿbs²

ʿzy — ʿbdʿzy, mrʾʿzy

ʿmn — ʿbdʿmn

qm — zdqm, zydqm

qn — ʿbdqn

*ktb — tmktb**

ktbʾ — tmktbʾ

ktby — tmktby

l — ʾḏnl, ḥnl, s¹ʿdl, ʿtnl*, ʿnl, qyml*, whbl*

lt — tmlt, gdlt, rʾmlt, (ʿbd)s¹qlt*

lh — ʾrs²lh, ʾs¹lh, bʿlh, bnlh, tmlh, grmlh, ḫlflh, zdlh, zrʿlh, s¹ʿdlh, s¹hnlh, s²ʿlh, s²kmlh,*

ʿbdlh, ʿwḏlh, ġṯlh, qnlh, mrʾlh, mʿnlh, nbṣlh*, nṣrlh, hnlh, hnʾlh, whblh

mlk — ʿbdmk

mnt — ʾs¹mnt, grmnt*, zdmnt, ʿbdmnt, mrʾmnt, hnʾmnt*

yṯʿ — s²ʿṯʿ

yġṯ — mrʾyġṯ

Bibliography:

Abu ʿAssāf, A. 1973 'Kitābāt ʿarabīyah ṣafawīyah jadīdah fi l-maṭhaf al-waṭanī bi dimashq'. *AAAS* 23: 201-209.

Abdullah, Y. 1975 *Die Personnamen in al-Hamdani's al-Iklīl und ihre Parallelen in den altsüdarabischen Inschriften*. Ph.D Dissertation. Tübingen.

Albright, W. F. 1959 'Some Notes on the Nabataean Goddess al-Kutbaʾ and Related Matters'. *BASOR* 156: 37-8.

Al-Ansary, A. 1966 *A Critical and Comparative Study of Lihyanite Personal Names*. Ph.D thesis presented to the University of Leeds, Department of Semitic Languages and Literatures. Unpublished.

—— 1970 'Kitābāt min Alāb'. *Bulletin of the Faculty of Arts, University of Riyadh* 1: 113-124.

—— 1975 'Lihyanite Personal Names: A Comparative Study'. *The Annual of the Leeds Oriental Society* 8 (1969-1973): 5-16.

Beeston, A. F. L. 1968 'The 'Men of the Tanglewood' in the Qurʾan'. *JSS* 13 no. 2: 253-255.

—— 1978 'Epigraphic South Arabian Nomenclature'. *Raydan* 1: 13-21.

—— 1984 *Sabaic Grammar*. Journal of Semitic Studies Monograph No.6. Manchester.

—— Ghul, M. A., Müller, W. W. and Ryckmans, J. 1982 *Sabaic Dictionary*. Louvain/Beyrouth.

Bender, F. 1974 *Geology of Jordan*. Translated from the German edition of 1968. Berlin.

—— 1975 *Geology of the Arabian Peninsular: Jordan*. U.S. Geological Survey Professional Paper 560-1.

Benz, F. L. 1972 *Personal Names in the Phoenician and Punic Inscriptions*. Studia Pohl 8. Rome.

Bowersock, G. W. 1975 'The Greek – Nabataean Bilingual Inscription at Ruwwafa, Saudi Arabia'. *Le Monde grec, Hommages à Claire Préaux*. Brussels, pp. 513-522.

—— 1983 *Roman Arabia*. Cambridge, Massachusetts/London.

Branden van den, A. 1950 (a) *Les Inscriptions Thamoudéennes*. Bibliothèque du Muséon. 25. Louvain.
Review by Albright, W. F. *BASOR* 121 1951: 24; Beeston, A. F. L. *JRAS* 1951: 195-196; Caskel, W. *OLZ* 49 1954: 51-55; Dussaud, R. *Syria* 1951: 304-305; Littmann, E. *BO* 9 1952: 216-220; Ryckmans, G. *Vetus Testamentum* 1 1951: 149-155; Savignac, R. *RB* 58 1951: 447-452.

—— 1950 (b) 'Une inscription Thamoudéene (Pseudo-Chrétienne)'. *Le Muséon* 63: 47-51.

—— 1954 'La Divinité Thamoudéenne ʿA'. *Le Muséon* 67: 349-354.

—— 1956 (a) *Les Textes Thamoudéens de Philby*, I, Bibliothèque du Muséon. 40. Louvain.
Review by Ryckmans, J. 1960.

—— 1956 (b) *Les Textes Thamoudéens de Philby*, II, Bibliothèque du Muséon. 41. Louvain.
Review by Ryckmans, J. 1960.

—— 1956 (c) 'Les textes Thamoudéens de Huber et Euting'. *Le Muséon* 69: 109-137.

—— 1957 (a) 'Nuṣūṣ ʾaḥdath iktishāf fi ḍuwāḥī al-Riyāḍ'. *As-Sanābil*: 41-48.

—— 1957 (b) 'L'unité de l'alphabet thamoudéen'. *Studia Islamica* 6: 5-27.

—— 1958 (a) 'Essai de solution du probléme thamoudéen'. *BO* 15: 7-12.

—— 1958 (b) 'Notes Thamoudéennes'. *Syria* 35: 110-116.

—— 1966 *Histoire de Thamoud*. Publications de l'Université Libanaise, Section des Études Historiques VI. 2ème edition. Beirut.
Review by Beeston, A. F. L. *BO* 19 1962: 172-175; Couroyer, B. *RB* 68 1961: 634-636.

—— 1969 'L'expression Safaitique *ʾtm ʿl ḫr*'. *al-Machriq* 63: 733-744.

Brown, F., Driver, D. D. and Briggs, C. A. eds. 1978 *A Hebrew and English Lexicon of the Old Testament based on the Lexicon of W. Gesenius*. Oxford.

Al-Bustānī, B. *Muḥīṭ al-Muḥīṭ*. Reprint Beirut 1977.

Campetti, S. and von Löwenstern, E. 1983 *L'Altra Umanità*. Sansoni. Firenze.

Cantineau, J. 1930 *Le Nabaéen*. Vol. I. Paris. Reprint Osnabrück 1978.

—— 1932 *Le Nabatéen*. Vol. II Paris. Reprint Osnabrück 1978.

Caskel, W. 1954 *Lihyan und Lihyanisch*. Arbeitsgemeinschaft für Forschung des Landes Nordhein-Westfalen, Heft 4. Köln und Opladen.

—— 1966 *Gamharat an-Nasab das genealogische Werk des Hišam ibn Muhammad al-Kalbī*, Vols. 1 and 2. Leiden.

Clark, V. A. 1976-77 'Some New Pre-Islamic Arabian Inscriptions from Northern Arabia'. *Abr-Nahrain* 17: 35-42.

—— 1980 'Three Safaitic Stones from Jordan'. *ADAJ* 24: 125-128.

—— 1983 *A Study of new Safaitic Inscriptions from Jordan*. Ph.D. thesis, University of Melbourne. 1979: University Microfilms International. Ann Arbor.

Corpus Inscriptionum Semiticarum, 1889 Pars II, Tomus 1, Inscriptiones aramaicas continens. Paris.

Corpus Inscriptionum Semiticarum, 1907 Pars II, Tomus 2, Inscriptiones aramaicas continens. Paris.

Corpus Inscriptionum Semiticarum, 1950-1951 Pars V, Tomus 1, Fasc. I, Inscriptiones saracenicas continens. Paris.

Doughty, C. 1884 *Documents épigraphiques recueillis dans le Nord de l'Arabie*. Paris.

Dozy, R. 1881 *Supplément aux Dictionnaires Arabes*., 2 Vols. Leiden. Reprint Beirut 1968.

Drewes, A. J. 1985 'The Phonemes of Lihyanite' in Robin, Ch., ed. *Mélanges linguistiques offerts á Maxime Rodinson par ses élèves, ses collègues et ses amis*. Supplément 12 aux Comptes Rendus du GLECS. Paris, pp. 165-173.

Eadie, J. 1984 'Humayma 1983: The Regional Survey'. *ADAJ* 28: 211-224.

—— and Oleson, J. P. 1986 'The Water-Supply Systems of Nabataean and Roman *Ḥumayma*'. *BASOR* 262: 49-76.

Ephʿal, I. 1982 *The Ancient Arabs. Nomads on the borders of the Fertile Crescent, 9th-5th centuries B. C.* Jerusalem.

Euting, J. 1896, 1914 (ed. Littmann, E.) *Tagebuch einer Reise in Innerarabien von Julius Euting*. 2 Vols. Leiden.

Fahd, T. 1968 *Le panthéon de l'Arabie centrale à la veille de l'ḥégire*. Institut Français d'Archéologie de Beyrouth, Bibliothèque Archéologique et Historique, 88. Paris.

Faris, N. A. 1952 *The Book of Idols being a translation of the Kitāb al-Aṣnām of Ibn al-Kalbi*. Princeton Oriental Series 14. Princeton.

Field, H. 1952 *Camel Brands and Graffiti from Iraq, Syria, Jordan, Iran and Arabia*. Supplement to the Journal of American Oriental Society 15. Baltimore.

Fowler, J. D. 1988 *Theophoric Personal Names in Ancient Hebrew: A Comparative Study*. Journal for the Study of the Old Testament, Supplement Series 49. Sheffield.

Glidden, H. W. 1939 'Koranic Iram, Legendary and Historical'. *BASOR* 73: 13-15.

Graf, D. 1978 'Saracens and the Defense of the Arabian Frontier'. *BASOR* 229: 1-26.

—— 1979 'A Preliminary Report on a survey of Nabatean-Roman Military Sites in Southern Jordan'. *ADAJ* 23: 121-127.

—— 1983 (a) 'Dedanite and Minean (South Arabian) Inscriptions from the Ḥismā'. *ADAJ* 27: 555-569.

—— 1983 (b) 'The Nabataeans and the *Ḥismā*: In the footsteps of Glueck and Beyond' in Meyers, C. L. and O'Connor, M. eds. *The Word of the Lord Shall Go Forth. Essays in Honor of David Noel Freedman in Celebration of his Sixtieth Birthday*. American Schools of Oriental Research, Indiana, pp. 647-664.

—— n. d. *A Thamudic Graffiti survey of the Ḥismā 1979-1980*. Department of History, University of Michigan, Ann Arbor, Michigan.

—— and M. O'Connor 1977 'The Origin of the Term Saracen and the *Rawwāfa* Inscription'. *Byzantine Studies* 4. Prt. 1: 52-66.

Gregory, S. and Kennedy, D. *Sir Aurel Stein's Limes Report*. Prt 1 and 2. BAR International Series 272 (i-ii). Oxford.

Grimme, H. 1926 (a) 'Ein Felspsalm aus altarabischer Heidenzeit'. *OLZ* 29: 13-23.

—— 1926 (b) *Die Lösung des Sinaischriftproblems: Die altthamudische Schrift*. Münster.
Review by Savignac, R. *RB* 36 1927: 275-278; Hoonacker, van A. *Le Muséon* 40 1927: 132-134.

—— 1927 'Zwei rätselhafte Götter der thamudischen Inschriften'. *Zeitschrift für Semitistik und Verwandte Gebiet* 5: 250-261.

—— 1929 *Die Altsinaitischen Buchstabeninschriften*. Berlin.

—— 1934 'Religiöses aus thamudischen Inschriften'. *Le Monde Orientale* (Uppsala) 28: 72-98.

—— 1935 'Thamudica'. *Zeitschrift für Semitistik und Verwandte Gebiet* 10: 177-188.

—— 1936 'À propos de quelques graffites du temple de Ramm'. *RB* 45: 90-95.

—— 1938 'Sind unsere Begriffe vom lihjanischen und thamudischen Alphabet reformbedürftig ?' *OLZ* 41: 345-353.

Halévy, J. 1901 'Nouvel Essai sur les Inscriptions proto-arabes'. *RS* 9: 316-355.

—— 1902 'Nouvel Essai sur les Inscriptions proto-arabes'. *RS* 10: 61-76, 172-173, 269-274.

Harding, G. L. 1951 'New Safaitic Texts'. *ADAJ* 1: 25-29.

—— 1953 'The Cairn of Hani'. *ADAJ* 2: 8-56.

—— 1969 'The Safaitic Tribes'. *Al-Abhath* 22: 3-25.

—— 1971 *An Index and Concordance of Pre-Islamic Names and Inscriptions*. Toronto.
Review by Bernus, M. *Syria* 49 1972: 269-270; Couroyer, B. *RB* 80 1973: 149-150; Gruntfest, J. B. *JAOS* 94 1974: 496-499; Irvine, A. K. *JSS* 18 1973: 297-300; Loundine, A. G. *BO* 1973: 284-288; Madelung, W. *JNES* 32 1973: 278; Ryckmans, J. *Le Muséon* 86 1973: 543-547.

—— 1972 (a) 'Safaitic Inscriptions from Tapline in Jordan'. *ADAJ* 17: 5-14.

—— 1972 (b) 'The Thamudic and Lihyanite Texts' in Part II of Parr, P. *et al*. 1972: 36-52, 60-61.

—— and Littmann, E. 1952 *Some Thamudic Inscriptions from the Hashimite Kingdom of Jordan*. Leiden.
Review by Abbott, N. *JNES* 13 1954: 193-194; Branden, van den A. *Oriens* 6 1953: 170-171; Dussaud, R. *Syria* 30 1953: 330-331; Jamme, A. *Oriente Moderno* 33 1953: 111-112; Torrey, C. C. *JAOS* 73 1953: 222-224.

Hava, J. G. *Al-Farāʾid Arabic-English Dictionary*. 5th edition. 1982. Beirut.

Hess, J. 1911 'Die Entzifferung der Thamüdischen Inschriften'. *Recueil de travaux relatifs à la philologie et à l'archéologie Egyptiennes et Assyriennes* 1: 156-175.

—— 1912 *Beduinennamen aus Zentralarabien*. Sitzungsberichte der Heidelberger Akademie der Wissenschaften, Philosophisch-historische Klasse, III, Jahrgang 1912, Abhandlung 19. Heidelberg.

Hoftijzer, J. and Jean, C-F. 1965 *Dictionnaire des Inscriptions Sémitiques de l'Ouest*. Leiden.

Huber, Ch. 1884 (a) 'Inscriptions recueilles dans l'Arabie centrale 1878-1882'. *Bulletin de la société de Géographie*, 7 série, 5: 289-303.

—— 1884 (b) 'Voyage dans l'Arabie centrale'. *Bulletin de la société de Géographie*, 7 série, 5: 304-362.

—— 1885 'Voyage dans l'Arabie centrale'. *Bulletin de la société de Géographie*, 7 série, 6: 920148.

—— 1891 *Journal d'un Voyage en Arabie*. Paris.

Ibn Durayd, Abū Bakr Muḥammad ibn al-Ḥasan, *Al-Ishtiqāq*. ʿAbd al-Salām Muḥammad Hārūn ed. Baghdad reprint 1979.

Ibn Manẓūr, Muḥammad ibn al-Mukarram, *Lisān al-ʿArab*. Beirut reprint.

Ingraham, M. L. *et al*. 1981 'Saudi Arabian Comprehensive Survey Program: c. Preliminary Report on a Reconnaissance Survey of the Northwestern Province (with a note on a brief survey of the northern province)'. *Aṭlāl* 5: 59-80.

Ingholt, H., Starcky, J. and Ryckmans, G. 1951 'Recueil Épigraphique' in Schlumberger, D. *La Palmyrène du Nord-Ouest*. Paris, pp. 139-87.

Jackson, K. P. 1983 'Ammonite Personal Names in the Context of the West Semitic Onomasticon' in Meyers, C. L. and O'Connor, M. eds. *The Word of the Lord Shall Go Forth. Essays in Honor of David Noel Freedman in Celebration of his Sixtieth Birthday*. American Schools of Oriental Research, Indiana, pp. 507-521.

Jamme, A. 1959 'A Safaitic Inscription from the Negev'. *Atiquot* 2: 150-151.

—— 1967 (a) *Thamudic Studies*. Washington. Privately printed.

—— 1967 (b) 'The so-called Thamudic Divine name wt = wtn'. *BO* 24: 279-288.

—— 1968 (a) *Minaean Inscriptions published as Lihyanite*. Washington. Privately printed.

—— 1968 (b) 'The Thamudic verb ʾtm'. *JAOS* 88: 290-294.

—— 1970 (a) 'Lihyanite, Sabaean and Thamudic Inscriptions from Western Saudi Arabia'. *RSO* 45: 91-113.

—— 1970 (b) 'The Pre-Islamic Inscriptions of the Riyâdh Museum'. *OA* 9: 115-139.

—— 1970 (c) 'Note de Méthodologie Thamoudéenne'. *Parole de l'Orient* 1: 441-444.

—— 1971 (a) Review of Winnett and Reed 1970. *Orientalia* 40: 481-489.

—— 1971 (b) 'Safaitic Inscriptions from the country of ʿArʿar and Raʾs al-ʿAnânîyah'. Ch. 2 in Altheim, F. and Stiehl, R. *Christentum am Roten Meer* I. Berlin, pp. 41-109.

—— 1972 Review of Winnett and Reed 1970. *JAOS* 92: 519-529.

—— 1974 (a) *Miscellanées d'ancient* [sic] *arabe V*. Washington. Privately printed.

—— 1974 (b) *Miscellanées d'ancient* [sic] *arabe VII*. Washington. Privately printed.

—— 1981 'Pre-Islamic Arabian Miscellanea' in Stieger, R. G. ed. *Al-Hudhud*. Festschrift Maria Höfner zum 80 Geburtstag. Graz.

—— 1985 *Miscellanées d'ancient* [sic] *arabe XIV*. Washington. Privately printed.

—— 1988 *Miscellanées d'ancient* [sic] *arabe XVI*. Washington. Privately printed.

Jaussen, A. and Savignac, R. 1909, 1914 *Mission archéologique en Arabie*. Vols 1-2 and Atlas. Paris.

Jeffrey, A. 1938 *The Foreign Vocabulary of the Qurʾān*. Baroda.

Jobling, W. J. 1982 (a) 'ʿAqaba – Maʿan Survey, Jan.-Feb., 1981'. *ADAJ* 26: 199-209.

—— 1982 (b) The 'ʿAqaba – Maʿan Archaeological and Epigraphic Survey 1982 Season'. *Liber Annuus* 32: 467-470.

—— 1983 (a) 'The 1982 Archaeological and Epigraphic Survey of the ʿAqaba - Maʿan Area of Southern Jordan'. *ADAJ* 27: 183-196.

—— 1983 (b) 'Preliminary Report on the Fourth Season of the ʿAqaba – Maʿan Archaeological and Epigraphic Survey, 1982/1983'. *ADAJ* 27: 197-208.

—— 1983 (c) 'Recent Exploration and Survey in Southern Jordan: Rock Art, Inscriptions and History'. *Berytus* 31: 27-40.

—— 1983 (d) 'Prospection archéologique et épigraphiques dans la région d'ʿAqaba – Maʿan'. *Syria* 60: 317-323.

—— 1983-1984 'The ʿAqaba – Maʿan Archaeological and Epigraphic Survey 1980-1982'. *A. F. O.* 29-30: 264-270.

—— 1984 (a) 'The Fifth Season of the ʿAqaba – Maʿan Survey 1984'. *ADAJ* 28: 191-202.

—— 1984 (b) 'The ʿAqaba – Maʿan Archaeological and Epigraphic Survey 1980-1984'. *Tri-annual of the Archaeological Society, University of Sydney (TRASUS)* 2, No. 2, Winter: 34-52.

—— 1984 (c) 'The Fifth Season of the ʿAqaba – Maʿan Archaeological Survey'. *Liber Annuus* 34: 423-428.

—— 1984-1986 'Desert Deities: Some new Epigraphic evidence for the Deities Dushares and al-Lat from the ʿAqaba – Maʿan Area of Southern Jordan'. *Religious Traditions* 7-9: 25-40.

—— 1985 'Preliminary Report on the Sixth Season of the ʿAqaba – Maʿan Epigraphic and Archaeological Survey'. *ADAJ* 29: 211-220.

—— 1986 (a) 'North Arabian (Thamudic) Inscriptions and rock Art fromt eh ʿAqaba – Maʿan Area of Southern Jordan'. *ADAJ* 30: 261-283.

—— 1986 (b) 'The ʿAqaba – Maʿan Archaeological and Epigraphic Survey 1983-1985'. *A. F. O.* 33: 233-247.

Joüon, P. 1935 'Quelues remarques sur les inscriptions thamoudéennes'. *Orientalia*. N. S. 4: 86-91.

Justi, F. 1895 *Iranisches Namenbuch*. Reprinted Hildesheim 1963.

Kahaleh, A. R. 1978 *Muʿajam qabāʾil al-ʿarab*. Beirut.

Kazimirski, A. 1860 *Dictionnaire Arabe-Français*. 2 Vols. Paris. Reprinted Beirut.

Kensdale, W. E. N. 1952 'Three Thamudic Inscriptions from the Nile Delta'. *Le Muséon* 65: 285-290.

Khraysheh, F. 1986 *Die Personnenamen in den nabatäischen Inschriften des Corpus Inscriptionem Semiticarum*. Ph.D Dissertation. Marburg/Lahn.

Killick, A. 'Udruh – The Frontier of an Empire: 1980 and 1981 Seasons, a Preliminary Report'. *Levant* 15: 110-131.

King, G. M. H. 1985 'The Corpus of the Inscriptions of Jordan Project: Epigraphic Report'. Appendix III in Betts, A. 1985 'Black Desert Survey, Jordan: Third Preliminary Report'. *Levant* 17: 50-51.

—— 1988 'Wadi Judayid Epigraphic Survey: A Preliminary Report'. *ADAJ* 32: 307-317.

—— 1989 'Some Inscriptions from Wadi Matakh' in Ibrahim, M. M. ed. *Arabian Studies in Honour of Mahmoud Ghul: Symposium at Yarmouk University December 8-11, 1984*'. Harrassowitz, Wiesbaden, pp. 37-55.

—— 1990 'The Basalt Desert Rescue Survey and some Preliminary Remarks on the Safaitic Inscriptions and Rock Drawings'. *PSAS* 20: 55-78.

—— n. d. 'Thamudic Inscriptions' in Killick, A. ed. *Udruh: Caravan City and Desert Oasis*. Privately printed.

Kirkbride, A. S. and Harding, G. L. 'Hasma'. 1947 *PEQ*: 7-26.

Kirkbride, D. 1960 (a) Communication in 'Chronique Archéologique'. *RB* 67: 230-244.

—— 1960 (b) 'Le temple Nabatéen de Ramm'. *RB* 67: 65-92.

—— 1969 'Ancient Arabian Ancestor Idols'. Prt. 1, *Archaeology* 22: 116-121, Prt. 2, *Archaeology* 22: 188-195.

Kirwan, L. Sir 1985 'Where to Search for the Ancient Port of Leuke Kome' in Abdalla, A. M. *et al*. eds. *Studies in the History of Arabia,* Vol. II, *Pre-Islamic Arabia*. Riyadh, pp. 55-61.

Knauf, A. 1980 'Eine Gruppe safaitischer Inschriften aus der *Ḥesmā'*'. *ZDPV* 96: 169-173.

—— 1981 'Zwei thamudische Inschriften aus der gegend von Ǧeraš'. *ZDPV* 97: 188-192.

—— 1982 'Vier thamudischen Inschriften vom Sinai'. *ZDPV* 98: 170-173.

—— 1983 'Südsafaitisch'. *ADAJ* 27: 587-596.

—— 1984 'Altnordarabisches Register'. *ZDPV* 100: 153-154.

—— 1985 'A South Safaitic Alphabet from Khirbet es-Samrā'' . *Levant* 17: 204-206.

Koenig, J. 1971 *La Site de al-Jaw dans l'Ancien Pays de Madian*. Paris. 1971.

Review by Müller, W. W. *OLZ* 73 1978: 266-270.; Winnett, F. V. *JAOS* 97 1971: 85-86.

Lane, E. W. 1863 *An Arabic-English Lexicon*. Parts 1-8. Reprinted Beirut 1980.

Lidzbarski, M. 1908 *Ephemeris für semitische Epigraphik* II. Giessen.

—— 1915 *Ephemeris für semitische Epigraphik* III. Giessen.

—— 1904 (a) *Zur Entzifferung der thamudischen Inschriften*. Mitteilungen der Vorderasiatischen Gesellschaft 9. Berlin.

—— 1904 (b) *Semitic Inscriptions*. Part IV of *Publications of an American Archaeological Expedition to Syria 1899-1900*. New York.

—— 1914 *Nabataean Inscriptions*. Division IV, Section A of *Publications of the Princeton University Archaeological Expeditions to Syria in 1904-1905 and 1909*. Leiden.

—— 1921 'Beduinen – und Drusen – Namen aus dem *Ḥaurān* – Gebiet'. *Nachrichten der Gesellschaft der Wissenschaften zu Göttingen, Philologisch – historische Klasse,* Berlin, pp. 1-20.

—— 1940 *Thamūd und Ṣafā Studien zur altnordarabischen Inschriftenkunde*. Abhandlungen für die Kunde des Morgenlandes 25, 1. Leipzig.
Review by Dussaud, R. *Syria* 22 1941: 285-286; Grimme, H. *OLZ* 45 1940: 174-185; Ryckmans, G. 1941.

—— 1943 *Safaitic Inscriptions*. Division IV, Section C of *Publications of the Princeton University Archaeological Expeditions to Syria in 1904-1905 and 1909*. Leiden.

—— 1945-1949 'Neues zur altnordarabischen Dialectkunde'. *ZDMG* 99: 168-180.

—— 1950 'Jesus in a Pre-Islamic Arabic Inscription'. *Moslem World* 40: 16-18.

—— 1953 'Nabataean Inscriptions from Egypt 1' *BSOAS* 15: 1-28.

—— 1954 'Nabataean Inscriptons from Egypt 2' *BSOAS* 16: 211-246.

Löwenstern, von E. B., Pinna, G. and Ponticelli, S. C. 1977 'Le Incisioni Rupestri di Wadi Rum (Giordania meridionale)'. *Natura* 68 (1-2): 84-100.

Macdonald, M. C. A. 1979 Review of Winnett, F. V. and Harding, G. L. 1978. *PEQ*: 137-140.

—— 1980 'Safaitic Inscriptions in the Amman Museum and other collections II'. *ADAJ* 24: 185-208.

—— 1981 'Notes on some Safaitic Inscriptions'. Appendix G in Helms, S. *Jawa Lost City of the Black Desert*. London, pp. 257-263.

—— 1986 'ABCs and letter order in Ancient North Arabian' *PSAS* 16: 101-168.

—— 1989 'Cursive Safaitic Inscriptions ? A Preliminary Investigation' in Ibrahim, M. M. ed. *Arabian Studies in Honour of Mahmoud Ghul: Symposium at Yarmouk University December 8-11, 1984*. Wiesbaden, pp.62-81.

—— 1991 'HU 501 and the use of s^3 in Taymanite'. To appear in a Festschrift for Professor A. F. L. Beeston. Oxford.

—— in press, 'Safaitic [Inscriptions]'. *Anchor Bible Dictionary*.

—— and Lankester Harding, G. L. 1976 'More Safaitic Texts from Jordan'. *ADAJ* 21: 119-130.

—— and Searight, A. 1982 'The Inscriptions and Rock-drawings of the Jawa area: A Preliminary Report on the First Season of Field-work of the Corpus of the Inscriptions of Jordan Project'. *ADAJ* 26: 159-172.

———— 1983 'Inscriptionss and Rock-art of the Jawa area, 1982 A Preliminary Report'. *ADAJ* 27: 571-576.

McKenzie, J. 1990 *The Architecture of Petra*. Oxford.

Milik, J. T. 1958 'Nouvelles inscriptions nabatéennes' *Syria* 35: 227-251.

—— 1958-1959 'Nouvelles inscriptions sémitiques et grecques du Pays de Moab'. *Liber Annuus* 9: 330-358.

—— 1959-1960 'Notes d'épigraphie et de topographie Jordaniennes'. *Liber Annuss* 10: 147-184.

—— 1972 (a) 'Inscriptions Grecques et Nabatéennes de Rawwafah' in Part II of Parr, P. *et al*. 1972: 54-59.

—— 1972 (b) *Dédicaces faites par des dieux (Palmyre, Hatra, Tyr) et des thiases sémitiques à l'époque romaine*. Recherches d'épigraphie proche-orientale I. Bibliothèque archéologique et historique 92. Paris.

—— 1976 'Une inscription bilingue nabatéenne et grecque à Pétra'. *ADAJ* 21: 143-152.

—— and Starcky, J. 1975 'Inscriptions récemment découvertes à Pétra'. *ADAJ* 20: 111-130.

—— and Teixidor, J. 1961 'New evidence on the North Arabic Deity Aktab-Kutbâ'. *BASOR* 163: 22-25.

al-Muḥaysin, Z. 1988 'Naqūsh jadīdah min Janūb al-Urdun'. *Newsletter of the Institute of Archeology and Anthropology Yarmouk University* 5: 6-8.

Müller, D. H. 1893 'Über die von Prof. Julius Euting in Nordarabien entdeckten und gesamelten proto-arabischen Inschriften'. *Transactions of the 9th International Congress of Orientalists*. 2: 86-95.

Müller, W. W. 1979 '*Abyaṯa* ʿ und andere mit *yṯ* ʿ gebildete Namen im Frühnordarabischen und Altsüdarabischen'. *WO* 10: 23-29.

—— 1980 'Some Remarks on the Safaitic Inscriptions'. *PSAS* 10: 67-74.

Musil, A. 1926 *The Northern Ḥeğāz*. American Geographical Society, Oriental Explorations and Studies No. 1. New York (reprint AMS New York 1978).

—— 1928 *The Manners and Customes of the Rwala Bedouins*. American Geographical Society, Oriental Explorations and Studies No. 6. New York (reprint AMS New York 1978).

—— Nasif, A. A. 1980 'Qanats at al-ʿUlāʾ'. *PSAS* 10: 75-80. (Thamudic D inscription p. 78, pl. 2).

Naveh, J. 1975 'Thamudic Inscriptions from the Negev'. *Eretz-Israel* 12: 129-131.

—— 1978 'Ancient North Arabian Inscriptions on the Three Stone Bowls'. In Hebrew with an English summary. *Eretz-Israel* 14: 178-182 and 129.

—— and Stern, E. 1974 'A Stone vessel with a Thamudic Inscription'. *IEJ* 24: 79-83.

Negev, A. 1963 'Nabataean Inscriptions from 'Avdat (Oboda)' *IEJ* 13, 2: 113-124.

—— 1977 'The Nabataeans and the Provincia Arabia' in Temporini, H. ed. *Austieg und Niedergang der römischen Welt* 2.8. Berlin, pp. 520-686.

Nöldeke, Th. 1898 *Syrische Grammatik*. Leipzig.

—— 1903 'Names' in Gray, G. B., Kautizsch, E. F. and Nöoldeke, Th. 'Names' in Cheyne, T. K. and Black, J. S. eds. *Encyclopaedia Biblica*, cols. 3271-3331.

—— 1904 *Beiträge zur semitischen Sprachwissensschaft*. Strasburg.

Noth, M. 1928 *Die israelitischen Personennamen im Rahmen der gemeinsemitischen Namengebung*. Beiträge zur Wissenschaft vom Alten und Neuen Testament, 3rd series, X, Stuttgart.

Oleson, J. P. 1986 'The *Ḥumayma* Hydraulic Survey: Preliminary Report of the 1986 Season'. *ADAJ* 30: 253-260.

Osborn, G. and Duford, J. M. 1981 'Geomorphological Processes in the Inselberg Region of South-Western Jordan'. *PEQ*: 1-17.

Oxtoby, W. G. 1968 *Some Inscriptions of the Safaitic Bedouin*. American Oriental Series 50. New Haven.

Parker, S. T. 1980 'Towards a History of the Limes Arabicus' in Hanson, W. S. and Keppie, L. J. F. eds. *Roman Frontier Studies*. BAR International Series 71(iii), pp. 865-878.

Parr, P. *et al*. 1970 'Preliminary Survey in N. W. Arabia, 1968'. *Bulletin of the Institute of Archaeology* 8 and 9 (1968): 193-242.

—— 1972 'Preliminary Survey in N. W. Arabia, 1968' *Bulletin of the Institute of Archaeology* 10 (1971): 23-61.

Payne Smith, R. 1903 *A Compendious Syriac Dictionary*. Oxford. Reprint 1976.

Petráček, K. 1973 'Zur semantischen Struktur der safatenischen Inschriften'. *ArOr* 41: 52-57.

Petrie, W. and Duncan, J. 1906 *Hyksos and Israelite Cities*. London.

Pliny *Natural History*, Book VI. Loeb Classical Library. Cambridge, Massachusetts/London.

Praetorius, F. 1912 'Zu Thamudischen Inschriften'. *ZDMG* 66: 785-786.

Preishigke, F. 1922 *Namenbuch*. Heidelberg.

Pritchard, J. B. ed. 1955 *Ancient Near Eastern Texts Relating to the Old Testament*. Princeton.

Rabin, C. 1951 *Ancient West-Arabian*. London.

Rhotert, W. 1938 *Transjordanien*. Stuttgart.

Röllig, W. 1987 'The Thamudic Inscriptions'. Appendix A in Ibrahim, M. ed. *A cemetery at Queen Alia International Airport*, Wiesbaden, pp. 43-45.

Rostovtzeff, M. 1934 'L'inscription d'Annianos au sanctuaire d'Iram'. *RB* 43: 402.

Rūsān, M. M. 1987 *Al-qabāʾil al-Ṯamūdiyah wa l-Ṣafawiyah*: *Dirāsah muqārinah*. Riyadh.

Ryckmans, G. 1934 'Inscriptions minéennes de Ramm'. Appendix 1 in Savignac, R. 1934: 590-591.

—— 1934-1935 *Les noms propres sud-sémitiques*. Bibliothèque du Muséon 2. Vols.1-3. Louvain.

—— 1937 'Notes Épigraphiques' 2ème série. *Le Muséon* 50: 323-344: IV 'Le déchiffrement de inscriptions Lihiyanite et Thamoudéennes' 323-337; V 'Inscriptions Thamoudéennes de Ramm' 337-342; VI 'Graffites Thamoudéens de ʿUmm er-Raṣṣâṣ' 343-344.

—— 1939 'Graffites thamoudéennes de la Région de Cadès'. *RB* 48: 242-247.

—— 1941 Review of Littmann 1940 in 'Notes Épigraphiques', 3ème série. *Le Muséon* 54: 139-159.

—— 1951 *Les Religions Arabes Préislamiques*. Bibliothèque du Muséon. 26. Louvain.

—— 1957 'Langues et écritures sémitiques II. Groupe du sud'. in Pirot, L. *et al*. eds. *Supplément au Dictionnaire de la Bible* 5. Paris, cols. 317-334.

Ryckmans, J. 1954 'Aperçu provisoire sur des inscriptions Thamoudéennes relevées en Arabie Centrale'. *Proceedings of the 22nd International Congress of Orientalists, Cambridge*: 91-92.

—— 1956 'Aspects nouveaux du problème Thamoudéen'. *Studia Islamica* 5: 5-17. Review by Dussaud, R. *Syria* 34 1957: 396-397.

—— 1960 Review of Van den Branden, 1956 (a) and 1956 (b). *BO* 17: 199-204.

—— 1985 'Alphabets, Scripts and Languages in Pre-Islamic Arabian Epigraphical Evidence' in Abdalla, A. M. *et al*. eds. *Studies in the History of Arabia*, Vol. II., *Pre-Islamic Arabia*. Riyadh, pp. 73-86.

—— n. d. *List of Names in the 10,000 unpublished Thamudic texts collected on the Ryckmans – Philby – Lippens Expedition to Saudi Arabia in 1952*. Unpublished.

Savignac, R. 1932 'Notes de voyage: Le sanctuaire d'Allat à Iram' *RB* 41: 581-597.

—— 1933 'Le sanctuaire d'Allat à Iram (1)' *RB* 42: 405-422.

—— 1934 'Le sanctuaire d'Allat à Iram (suite)' *RB* 43: 572-589.

—— 1936 'Sur les pistes de Transjordanie méridionale' *RB* 45: 235-262.

—— and Horsfield, G. 1935 'Le Temple de Ramm' *RB* 44: 245-278.

—— and Starcky, J. 1957 'Une Inscription Nabatéenne provenant du Djôf'. *RB* 64: 197-217.

—— and de Vaux, R. 1938 'Novelles recherches dans la région de Cadès'. *RB* 47: 89-100.

Seyrig, H. 1957 'Sur trois inscriptions du Hedjaz'. Antiquités syriennes 668. *Syria* 34: 259-261.

Stark, J. K. 1971 *Personal Names in Palmyrene Inscriptions*. Oxford.
Review by Irvine, A. K. *BSOAS* 35 1972: 355.

Starcky, J. 1966 'Pétra et la Nabatène'. in Pirot, L. *et al*. eds. *Supplément au Dictionnaire de la Bible* 7 Paris, cols. 886-1017.

Strugnell, J. 1959 'The Nabataean Goddess al-Kutbaʾ and her Sanctuaries'. *BASOR* 156: 29-36.

Teixidor, J. 1977 *The Pagan God: Popular religion in the Greco-Roman Near East*. Princeton.

—— 1979 *The Pantheon of Palmyra*. Études préliminaires aux religions orientales dans l'empire romain 79. Leiden.

Voigt, R. M. 1981 'On the Structure of Safaitic Inscriptions'. *ADAJ* 24: 79-93.

—— 1984 'Some Notes on South Safaitic'. *ADAJ* 28: 311-314.

Wellhausen, J. 1887 *Reste arabischen Heidentums*. Skizzen und Vorarbeiten, III. Berlin (Reprint 1961).

Winnett, F. V. 1937 *A Study of the Lihyanite and Thamudic Inscriptions*. Toronto;
Review by Albright, W. F. *BASOR* 66 1937: 30-31. Février, J. *Journal Asiatique* 229 1937: 660-662; Grimme, H. 1938; Höfner, M. *WZKM* 47 1940: 311-312; Ryckmans, G. 1937 IV; Savignac, R. *RB* 46 1937: 586-591.

—— 1938 (a) 'Allah before Islam'. *The Moslem World* 28: 239-248.

—— 1938 (b) 'Notes on the Lihyanite and Thamudic Inscription'. *Le Muséon* 51: 299-310.

—— 1940 'The Daughters of Allah'. *The Moslem World* 30: 113-130.

—— 1941 'References to Jesus in Pre-Islamic Arabic Inscriptions'. *The Moslem World* 31: 341-353.

—— 1957 *Safaitic Inscriptions from Jordan*. Toronto.

—— 1959 'Thamudic Inscriptions from the Negev'. *Atiqot* 2: 146-149.

—— 1971 'An Arabian Mischellany' *AION* 31 (N. S. 21): 443-454.

—— 1973 (a) 'The *Ḥāʾil* Inscriptions' Prt II of Winnett, F. V. and Reed, W. L. 1973, pp. 62-94.

—— 1973 (b) 'Some Thamudic Religious Texts in the light of the *Ḥāʾil* Inscriptions'. *Berytus* 22: 95-100.

—— [1982] Studies in Thamudic. Unpublished typescript.

—— and Lankester Harding, G. L. 1978 *Inscriptions from Fifty Safaitic Cairns*. Toronto.
Review by Macdonald, M. C. A. 1979.

—— 1987 'Studies in Ancient North Arabian'. *JAOS* 107: 239-244.

—— and Reed, W. L. 1967 'Report on the Archaeological Expedition to *Ḥāʾil* in Northern Saudi Arabia (1967)'. *BASOR* 188: 2-3.

———— 1970 *Ancient Records from North Arabia*. Toronto.
Review by Couroyer, B. *RB* 78 1971: 633-635; Greenfield, J. C. *Journal of Biblical Literature* 89 1970: 483-484; Jamme, A. 1971 (a); Jamme, A. 1972; Müller, W. W. *ZDMG* 1972 122: 319-321. Oelsner, J. *OLZ* 72 1977: 280-282; Ryckmans, J. *Chronique d'Égypte* 45 1970: 317; Ryckmans, J. *BO* 31 1974: 143-144.

———— 1973 'An Archaeological – Epigraphical Survey of the *Ḥāʾil* of Northern Saʿudi Arabia', *Berytus* 22: 53-113.

Wright, W. 1859 *A Grammar of the Arabic Language*. Cambridge University Press. Reprint 1975.

Wüstenfeld, F. 1854 *Ibn Doreid's genealogisch-etymologisches Handbuch*. Göttingen. Reprint Leipzig 1900.

Wüthnow, H. 1930 *Die semitischen Menschennamen in griechischen Inschriften und Papyri des vorderen Orients*. Studien zur Epigraphik und Papyruskunde, Bd. 1, Schrift 4. Leipzig.

Abbreviations:

AAAS	Les Annales Archéologiques Arabes Syriennes
ADAJ	Annual of the Department of Antiquities of Jordan
Adr	Drawings from Wādī Judayyid Site A
A. f. O	Archiv für Orientforschung
AION	Annali dell'Istituto Orientale di Napoli
AKSD	Inscriptions in Abū ʿAssāf 1973
AMJ	Inscriptions in W. Jobling's reports on the ʿAqaba-Maʿan survey
Ar.	Arabic
ArOr	Archiv Orientálni
BAR	British Archaeological Reports
BASOR	Bulletin of the American Schools of Oriental Research
Bdr	Drawings from Wādī Judayyid Site B
BDrN	Littman 1921
BES	Van den Branden 1969
BIT	Van den Branden 1950
BO	Bibliotheca Orientalis
BP I	Van den Branden 1956 (a)
BP II	Van den Branden 1956 (b)
BSOAS	Bulletin of the School of Oriental and African Studies
C	Safaitic inscriptions in CIS Pars V, Tomus 1
Cantineau	Cantineau 1932
Cdr	Drawings from Wādī Judayyid Site C
Ch.	chapter
CIK	Caskel 1966
CIS	Corpus Inscriptionum Semiticarum
cmpd.	compound
conj.	conjunction
CSNS	Inscriptions in Clark 1983
CSP	Inscriptions in Clark 1976-77
CTSS	Inscriptions in Clark 1980
D.N	Divine Name
Do	Doughty 1884
Eut	Inscriptions copied by J. Euting
Eut T	Euting 1896, 1914
fem.	feminine
Fig.	Figure
GLECS	Groupe Linguistique d'Études Chamito-Sémitiques
Gk.	Greek
HB	Hess 1912
HCH	Inscriptions in Harding 1953
HE	Inscriptions in Harding 1972 (b)
Heb.	Hebrew
HIC	Inscriptions in Petrie and Duncan 1906
HIn	Harding 1971

HS	Inscriptions photographed during the 1986 exploratory survey of the *Ḥismā*
Hu	Inscriptions in Huber 1891 according to page number
HU	Inscriptions in Huber 1891 as re-numbered by Van den Branden 1950
ID	Ibn Durayd *Al-Ishtiqāq*. Page numbers are those in Wüstenfeld 1854
IEJ	Israel Exploration Journal
imp.	imperative
inf. n.	infinitive noun
intro. part.	introductory particle
ISB	Oxtoby 1968
ISP	Inscriptions in Ingholt *et al*. 1951
JaL	Lihyanite inscriptions read by A. Jamme
JaT	Thamudic inscriptions read by A. Jamme
JaS	Safaitic inscriptions read by A. Jamme
JAOS	Journal of the American Oriental Society
JMAA	A. Jamme's Miscellanées d'ancient [sic] arabe
JMIL	Jamme 1968
JNES	Journal of Near Eastern Studies
JPIR	Jamme 1970 (b)
JRAR	Jamme 1971 (a)
JS	Thamudic inscriptions in Jaussen and Savignac
JS L	Lihyanite inscriptions in Jaussen and Savignac 1909, 1914
JS Nab	Nabataean inscriptions in Jaussen and Savignac 1909, 1914
JSS	Journal of Semitic Studies
JS Tay	Taymanite inscriptions in Jaussen and Savignac 1909, 1914
JTS	Jamme 1967 (a)
JTW	Jamme 1967 (b)
Kaz	Kazimirski 1860
KJA	Inscriptions from Wādī Judayyid Site A
KJB	Inscriptions from Wādī Judayyid Site B
KJC	Inscriptions from Wādī Judayyid Site C
KJPr	Inscriptions in King 1988
KnA	Hismaic alphabet read in Knauf 1985
KnEG	Inscriptions in Knauf 1980
KnVT	Knauf 1982
KTT	Inscriptions in Kensdale 1952
KU	Inscriptions read in King n. d.
KWM	Inscriptions in King 1989
Lane	Lane, E. W. *An Arabic-English Lexicon*
LAU	Inscriptions in the Plates and Figures in Campetti et al. 1983
Lihyn	Lihyanite
Lisan	Ibn Manẓūr, *Lisān al-ʿarab*
LittNE	1 Littmann 1953
LittNE	2 Littmann 1954
LP	Safaitic inscriptions in Littmann 1943
LP Nab	Nabataean inscriptions in Littmann 1914

masc.	masculine
Meek	Inscription edited in Winnett 1937: 5-7
Min.	Minaic
MNE	Milik 1959-1960
MNM	Inscriptions in Milik 1958-1959
MNSI	Inscriptions in Macdonald 1981
MSTJ	Inscriptions in Macdonald and Harding 1976
MU	Inscription read by Macdonald, M. C. A. in Killick 1983: 115, Pl. XIIA
MuNJ	Inscriptions in al-Muḥaysin
N	Name
Nab	Nabataean
Naveh N	Inscriptions in Naveh 1975
Naveh TSB	Inscriptions in Naveh 1978
n.	noun
n. d.	no date
Noth	Noth 1928
NST	Inscriptions in Harding 1951
OA	Oriens Antiquus
OLZ	Orientalistische Literaturzeitung
PEQ	Palestine Exploration Quarterly
Pers.	Persian
pers.	person
Ph	Texts copied by H. St. J. B. Philby and published by Van den Branden 1956 (a) and 1956 (b)
Pl.	Plate
pl.	plural
prep.	preposition
pron.	pronoun
prtc.	participle
PSAS	Proceedings of the Seminar for Arabian Studies
Qat.	Qatabanic
Ramm	SSA inscriptions read in Van den Branden 1950 (a)
RB	Revue Biblique
Reg. No.	Registration Number
Rh	Inscriptions in the plates in Rhotert 1938
RNE	Ryckmans, G. 1937, 1941 'Notes Épigraphiques'
RNP	Ryckmans, G. 1934-1935
RSO	Rivista degli Studi Orientali
RTI	Inscriptions in Röllig 1987
RyGT	Inscriptions in Ryckmans, G. 1939
Sab.	Sabaic
Saf.	Safaitic
Savignac AS	Nabataean inscriptions from *ʿAyn Šallālah* in Savignac 1933 and 1934
SIAM	Inscriptions in Macdonald 1980
SIJ	Inscriptions in Winnett 1957
sing.	singular

SSA	Thamudic inscriptions in Savignac 1934: 579-580 Figs. 4-5 and edited by Ryckmans 1937 V
Stark	Stark 1971
Stehle	Inscriptions in D. Stehle *South Arabic Graffiti from Field Museum Collections*. Unpublished M.A. thesis, 1960.
subs.	substantive
Syr.	Syriac
Tay.	Taymanitic
Tham.	Thamudic
Tdr	Inscriptions in Koenig 1971
TIJ	Inscriptions in Harding and Littmann 1952
Tr. N.	Tribal Name
UR	Inscriptions in Savignac 1936: 245, Fig.4 and edited by Ryckmans, G. 1937 VI
vb.	verb
voc. part.	vocative particle
WA	Inscriptions in Winnett 1959
WAM T	Thamudic inscriptions in Winnett 1971
WH	Inscriptions in Winnett and Harding 1978
WHI	Inscriptions in Winnett 1973 (a)
WLT	Winnett 1937
WO	Die Welt des Orients
WR	Wüstenfeld 1853
Wright	1859
WTay	Taymanitic inscriptions in Winnett and Reed 1970
WTI	Thamudic inscriptions in Winnett and Reed 1970
ZDMG	Zeitschrift der Deutschen Morgenländischen Gesellschaft
ZDPV	Zeitschrift des Deutschen palästin-Vereins