Tutorial Letter 101/3/2018

Basic Numeracy

BNU1501

Semesters 1 and 2

Department of Decision Sciences

Important information

- This tutorial letter contains **the assignment questions** and other important information about your module.
- Please register on myUnisa, **activate your myLife email addresses** and make sure you have regular access to this **module's website**, BNU1501-2018-S1/S2.

Bar code

Define tomorrow.

UNISA university of south africa

Contents

1 INTRODUCTION AND WELCOME **4**

1.1 The study material . . . 4

1.1.1 The Despatch Department . . . 4

1.1.2 The rest of the study material . . . 4

1.1.3 The Prescribed Financial Calculator . . . 4

1.2 myUnisa . . . 5

2 PURPOSE AND OUTCOMES **5**

3 LECTURER AND CONTACT DETAILS **5**

3.1 Lecturer . . . 5

3.2 Department . . . 6

3.3 University . . . 6

4 STUDENT SUPPORT SERVICES **6**

5 STUDY PLAN **7**

6 ASSESSMENTS **7**

6.1 Assessment plan . . . 7

6.2 Unique assignment numbers and due dates . . . 8

6.3 Assignment enquiries . . . 8

6.4 Semester mark . . . 8

6.5 Assignment questions . . . 9

7 EXAMINATION **9**

8 FREQUENTLY ASKED QUESTIONS **12**

9 NOTES ON THE SHARP *EL-738FB* CALCULATOR **12**

9.1 General . . . 12

9.2 Switch on your calculator . . . 14

9.2.1 The SETUP menu . . . 14

9.3 Selecting a MODE . . . 15

9.4 Calculator keys . . . 16

9.5 Financial calculator mode . . . 22

9.6 Interest rates . . . 23

9.6.1 Simple interest 23
9.6.2 Compound interest 24
9.7 Annuities 25
9.7.1 Present value 25
9.7.2 Future value 26
9.8 Amortisation 27

10 ASSIGNMENTS **29**

1 INTRODUCTION AND WELCOME

Dear Student

We are pleased to welcome you to the Department of Decision Sciences and specifically to the module, BNU1501: Basic Numeracy. We hope that you will find this module both interesting and rewarding. We will do our best to make your study of this module successful. You will be well on your way if you start studying immediately and resolve to do the assignments properly.

It is essential that you read this Tutorial Letter 101 very carefully. Tutorial Letter 101 contains the assignment questions and other important information about this module.

1.1 The study material

1.1.1 The Despatch Department

The Despatch Department should supply you with hard copies of the following:

- one study guide
- Tutorial Letter 101 (this tutorial letter)

The above will be despatched to you as soon as possible. However, because we have experienced problems with strikes at the post office and disruptions at campuses, we want to recommend strongly that you make use of the study material that is posted on the BNU1501 module site on myUnisa at **https://my.unisa.ac.za**.

According to the language policy of Unisa, all study material and examination papers will be in English only.

1.1.2 The rest of the study material

The rest of the study material will be posted **on the BNU1501 module site only** on myUnisa under **Official Study Material** and under **Additional Resources:**

- the Workbook for extra examples and exercises
- Tutorial Letters 201 and 202 that contain the solutions to the assignments (These will be posted after the respective assignments have been closed for submission.)
- any other tutorial letters that may be necessary
- some old examination papers, posted on the BNU1501 site, under **Official Study Material**, by the Examination Section. (The solutions to these examination papers are not available. You may contact us if you get stuck with a question.)

Take note that there is **no** prescribed book for this module.

1.1.3 The Prescribed Financial Calculator

You have to purchase the prescribed SHARP EL 738FB Financial Calculator. Unisa does not provide it. This calculator is essential in studying this module and other modules including Financial Mathematics. Read the lecturer's **Announcements** on the calculator on the BNU1501 module site.

1.2 myUnisa

It is **imperative** that you make use of myUnisa. You must use your myLife email accounts and read your emails on it. The lecturer relies on it that you read her **personal Welcome Message** and **Announcements** on the main BNU1501-18-S1 or BNU1501-18-S2 module site.

You must ensure that you have access to a computer that is linked to the internet to enable you to gain **quick** access to your study material and other resources and information at the University. It makes communication with your lecturers, with other students and with the administrative departments of Unisa much easier – all through a computer and the internet.

To go to the myUnisa website, start at the main Unisa website, at **http://www.unisa.ac.za**, and then click on the "Login to myUnisa" link. This should take you to the myUnisa website. You can also go there directly by typing in **https://my.unisa.ac.za**.

2 PURPOSE AND OUTCOMES

You will find the purpose of and outcomes for this module under **Additional Resources** on the BNU1501 module site.

3 LECTURER AND CONTACT DETAILS

3.1 Lecturer

The name and contact details of the lecturer responsible for this module will be posted on the BNU1501 module site on myUnisa. We suggest that you write the name and contact details of the lecturer in the space below, for your convenience.

The lecturer of BNU1501 will assist you with any problems you may experience with the contents of the study material (**not with administrative matters**). You are welcome to contact the lecturer by e-mail or telephone, or to make an appointment to see him/her in person.

Take note that the lecturer has other academic obligations too and is not available on a full-time basis. Therefore, you will have to contact him/her in advance to make an appointment if you wish to see him/her in person. **Always have your module code and student number at hand when contacting your lecturers.**

3.2 Department

Department of Decision Sciences
Tel: 012 4334684
E-mail: qm@unisa.ac.za

3.3 University

To contact the University, you should follow the instructions given on the Unisa website at **https://my.unisa.ac.za** under **Contact us** (the last tab on the second horizontal row of tabs). Remember to include or quote your **student number** when you contact the University.

4 STUDENT SUPPORT SERVICES

For **academic** support, you may contact your lecturer. Use the contact details on the BNU1501 module site on myUnisa.

For **administrative** support, use the **Contact us** link referred to in section 3.3 above.

If you want to know whether your assignment has been received, registered, processed or returned, please check on the BNU1501 module site under **Assessment Info** on myUnisa.

- **Face-to-face tutors**

  Face-to-face tutoring involves face-to-face **contact sessions between the students and the tutor,** which means that students meet with their tutors in a classroom setup, at designated venues and at specific times at the **Unisa regional Learning Centres**. Face-to-face tutors are qualified experts who are practitioners and specialists in the subjects in which they are appointed.

  To join face-to-face tutorials you need to go to the **Unisa Regional Learning Centre** nearest to you. The regional offices will supply you with the dates, place and times of the sessions for the modules that you have enrolled for. Note that not all regional offices offer tutor classes. **Only if enough students enroll** for a specific module at a certain centre, the regional manager will arrange that UNISA appoints a tutor for that region.

- **E-tutors**

  E-tutoring entails the delivery of **teaching and learning online via the internet.** An e-tutor is the person who undertakes the role of supporting and enabling students to learn online effectively. E-tutors are qualified experts who are practitioners and specialists in the subjects in which they are appointed.

  You will be grouped and allocated to an e-tutor after the registration process has ended. You will receive a system-generated **myLife e-mail notification**, informing you that you are allocated to an e-tutor. To contact your tutor log on to myUnisa and you will see an additional tab for example BNU1501-18-S1-1E or BNU1501-18-S2-3E. Once you have opened this tab, you can start communicating with your e-tutor using the **Discussion Forum** or other communication tools available on the group site as prescribed.

5 STUDY PLAN

This is a semester module and therefore study time is limited. In this short time, you have to work through the study material and prepare for the examination.

The lecturer's advice for good time management is as follows:

- Plan your day and a study schedule that suits your personal circumstances and stick to it. Discuss this with your family and friends so that they know and respect the fact that you are serious about your studies and that you will not be available at certain hours of the day. Remember to build enough sleep into this plan as well. Self-discipline is the key to success in studying at a distance.
- Learn the content in the Study Guide chapter by chapter. Work through the first chapter, thoroughly as if you are studying for the examination. Do all the examples and exercises. Do not proceed with the next exercise or chapter before you are sure you have mastered the current one. If you study each chapter in this manner, you will have much more time for revision before the examination.
- The closing dates of the assignments will be an indication of how much time you can spend on a chapter. You need to have mastered the first three chapters for the first assignment. The next four chapters have to be studied before the second assignment is attempted.
- A semester is much shorter than you think, therefore we advise you to start studying immediately. This is to ensure that you have enough time for proper revision. The more times you work through the study material, the better prepared you will be to answer the questions in the examination.

6 ASSESSMENTS

6.1 Assessment plan

This tutorial letter contains **two** compulsory assignments; two for the first semester and two for the second semester.

You must submit your assignments online, under **Assessment Info** on the module site.

Both the assignments in a semester count to your semester mark. All assignments must be submitted on time. Late assignments will not be marked, which will have a negative effect on your semester mark.

Your mark for Assignment 01 will contribute 50% to your semester mark. Assignment 01 is based on chapters 1, 2 and 3 in the study guide.

Your mark for Assignment 02 will contribute 50% to your semester mark. Assignment 02 is based on chapters 4 to 7 in the study guide.

All registered students will find the solutions to these compulsory assignments on the module site on myUnisa, after the respective due dates. **No hard copies** of the solutions will be sent to you.

IMPORTANT NOTE: EXAMINATION ADMISSION
In order to gain examination admission, you must submit at least one assignment by **6 April 2018** for Semester 1 students, or by **31 August 2018** for Semester 2 students. That means, if you have not submitted Assignment 01 on time, you will have to submit Assignment 02 before 6 April 2018 for Semester 1 students or by 31 August 2018 for Semester 2 students.

6.2 Unique assignment numbers and due dates

6.2.1

Semester 1		
	Assignment 01	**Assignment 02**
Due date	19 March 2018	18 April 2018
Unique number	753641	746855
Chapters	1, 2 and 3	4, 5, 6 and 7

6.2.2

Semester 2		
	Assignment 01	**Assignment 02**
Due date	15 August 2018	17 September 2018
Unique number	783587	651590
Chapters	1, 2 and 3	4, 5, 6 and 7

6.2.3 The due date of an assignment is the last date at which the assignment should be submitted via myUnisa. **No extension** of due dates can be granted because the solutions will be published right after that date.

Assignments may **not** be submitted by fax or e-mail but must be submitted on the module site via myUnisa.

To submit an assignment on myUnisa:

- Go to https://my.unisa.ac.za.
- Log in using your student number and password (register first).
- Select the module from the orange bar.
- Click on **Assessment Info** in the left menu.
- Click on the assignment number you want to submit.
- Follow the instructions.

6.3 Assignment enquiries

The lecturer can assist you with any enquiries relating to the **content** of the study material, the assignment questions and the solutions to them.

However, note that neither the Department of Decision Sciences, nor the School of Economic Sciences will be able to answer your **general administrative assignment enquiries**. If you wish to know whether your assignment has been received, registered, processed or returned, please check on the BNU1501 module site under **Assessment Info** on myUnisa or send an e-mail to **assign@unisa.ac.za.**

6.4 Semester mark

- If you obtain the subminimum of 40% for the examination paper, your semester mark will contribute 20% and the examination mark 80% to your final mark.
- If you obtain less than 40% for the examination paper your semester mark will not count towards your final mark. Therefore, final mark $= 0{,}2 \times$ semester mark $+ 0{,}8 \times$ examination mark.

6.5 Assignment questions

You will find the assignment questions for both semesters at the end of this document.

7 EXAMINATION

Those of you registered for the **first** semester will write the BNU1501 examination in **May/June**, and those of you registered for the **second** semester will write the examination in **October/November**. During the relevant semester, the Examination Section will provide each of you with information about the examination venue, date and time. You can find the **provisional** examination dates on the main Unisa website. Your **personal**, **final** exam timetable will be available on myUnisa, under **myAdmin**, after the examination admissions have been done. Please make sure that you know the correct **date**, **time** and **venue** for your examination, and plan accordingly. **We cannot accept any excuses for failure to adhere to the date, time or venue.**

If for some **serious** reason, like illness, you cannot write the examination, send an email to **exams@unisa.ac.za.**

Here is some information about the examination paper:

- The duration of the examination is **two** hours.
- The examination paper will consist of multiple choice questions only.
- You will have to mark the answers with an HB pencil on a mark reading sheet. (See example and instructions below.) Make sure you have an HB pencil, an eraser and a shapener with you.
- A formula sheet will be attached to the examination paper. The formulas will not be labelled, which means you will have to know which formula you need to apply in a certain question.
- The blank pages in the examination paper can be used for rough work. Note that these will not be marked.
- The examination paper will cover all the content of the study guide.
- The use of a **financial** calculator will be allowed in the examination. Only your writing materials and a calculator will be allowed in the examination hall.
- As soon as the answer sheets of all the Examination Section have been received by the Examination Section, the answers will be marked by a computer. This may take place more than a month after the examination date.
- To pass this module, you must obtain a final mark of at least 50%.
- Previous examination papers are published on myUnisa for extra exercises, but no memoranda are made available. You may contact us if you get stuck with a certain question, but you have to have attempted doing it and indicate to us exactly where you got stuck. You should not rely on old examination papers to pass the module.

UNIVERSITY OF SOUTH AFRICA UNISA university of south africa UNIVERSITEIT VAN SUID-AFRIKA

EXAMINATION MARK READING SHEET EKSAMEN-MERKLEESBLAD

PART 1 (GENERAL/ALGEMEEN) DEEL 1

STUDY UNIT e.g. PSY100-X
STUDIE-EENHEID bv. PSY100-X

1

PAPER NUMBER
VRAESTELNOMMER

2

INITIALS AND SURNAME
VOORLETTERS EN VAN

3

DATE OF EXAMINATION
DATUM VAN EKSAMEN

4

EXAMINATION CENTRE (E.G. PRETORIA)
EKSAMENSENTRUM (BV. PRETORIA)

5

STUDENT NUMBER
STUDENTENOMMER

6

7

UNIQUE PAPER NO
UNIEKE VRAESTEL NR

8

9

For use by examination invigilator
Vir gebruik deur eksamenopsiener

IMPORTANT

1. USE ONLY AN HB PENCIL TO COMPLETE THIS SHEET.
2. MARK LIKE THIS: .
3. CHECK THAT YOUR INITIALS AND SURNAME HAS BEEN FILLED IN CORRECTLY.
4. ENTER YOUR STUDENT NUMBER FROM LEFT TO RIGHT.
5. CHECK THAT YOUR STUDENT NUMBER HAS BEEN FILLED IN CORRECTLY.
6. CHECK THAT THE UNIQUE NUMBER HAS BEEN FILLED IN CORRECTLY.
7. CHECK THAT ONLY ONE ANSWER PER QUESTION HAS BEEN MARKED.
8. DO NOT FOLD.

BELANGRIK

1. GEBRUIK SLEGS 'N HB-POTLOOD OM HIERDIE BLAD TE VOLTOOI.
2. MERK AS VOLG: .
3. KONTROLEER DAT U VOORLETTERS EN VAN REG INGEVUL IS.
4. VUL U STUDENTENOMMER VAN LINKS NA REGS IN.
5. KONTROLEER DAT U DIE KORREKTE STUDENTENOMMER VERSTREK HET.
6. KONTROLEER DAT DIE UNIEKE NOMMER REG INGEVUL IS.
7. MAAK SEKER DAT NET EEN ALTERNATIEF PER VRAAG GEMERK IS.
8. MOENIE VOU NIE.

PART 2 (ANSWERS/ANTWOORDE) DEEL 2

10

1	36	71	106
2	37	72	107
3	38	73	108
4	39	74	109
5	40	75	110
6	41	76	111
7	42	77	112
8	43	78	113
9	44	79	114
10	45	80	115
11	46	81	116
12	47	82	117
13	48	83	118
14	49	84	119
15	50	85	120
16	51	86	121
17	52	87	122
18	53	88	123
19	54	89	124
20	55	90	125
21	56	91	126
22	57	92	127
23	58	93	128
24	59	94	129
25	60	95	130
26	61	96	131
27	62	97	132
28	63	98	133
29	64	99	134
30	65	100	135
31	66	101	136
32	67	102	137
33	68	103	138
34	69	104	139
35	70	105	140

Specimen only

UNISA P1932

MARK READING SHEET INSTRUCTIONS

Your mark reading sheet is marked by computer and should therefore be filled in thoroughly and correctly.

USE ONLY AN HB PENCIL TO COMPLETE YOUR MARK READING SHEET

PLEASE DO NOT FOLD OR DAMAGE YOUR MARK READING SHEET

Consult the illustration of a mark reading sheet on the reverse of this page and follow the instructions step by step when working on your sheet.

Instruction numbers ❶ to ❿ refer to spaces on your mark reading sheet which you should fill in as follows:

❶ Write your paper code in these eight squares, for instance:

B	N	U	1	5	0	1	

❷ The paper number pertains only to first-level courses consisting of two papers.

WRITE | 0 | 1 | for the first paper and | 0 | 2 | for the second. If only one paper, then leave blank.

❸ Fill in your initials and surname.

❹ Fill in the date of the examination.

❺ Fill in the name of the examination centre.

❻ WRITE the digits of your student number HORIZONTALLY (from left to right). Begin by filling in the first digit of your student number in the first square on the left; then fill in the other digits, each one in a separate square.

❼ In each vertical column mark the digit that corresponds to the digit in your student number as follows: [-].

❽ WRITE your unique paper number HORIZONTALLY.
NB. Your unique paper number appears at the top of your examination paper and consists only of digits (e.g. 403326).

❾ In each vertical column mark the digit that corresponds to the digit number in your unique paper number as follows: [-].

❿ Question numbers 1 to 140 indicate corresponding question numbers in your examination paper. The five spaces with digits 1 to 5 next to each question number indicate an alternative answer to each question. The spaces of which the number correspond to the answer you have chosen for each question and should be marked as follows: [-].

◆ For official use by the invigilator. Do not fill in any information here.

8 FREQUENTLY ASKED QUESTIONS

You will find frequently asked questions and answers under **Additional Resources** on the module site.

9 NOTES ON THE SHARP *EL-738FB* CALCULATOR

9.1 General

You must purchase the SHARP EL-738, the SHARP EL-738F or the SHARP EL-738FB (newest version) calculator. This calculator can do basic calculations and financial calculations.

Most of the keys can perform two functions.

To perform a function written on the key, simply press the key. To perform a function written on the surface just above the key, first press the orange **2ndF** key to activate it to perform the function when pressed.

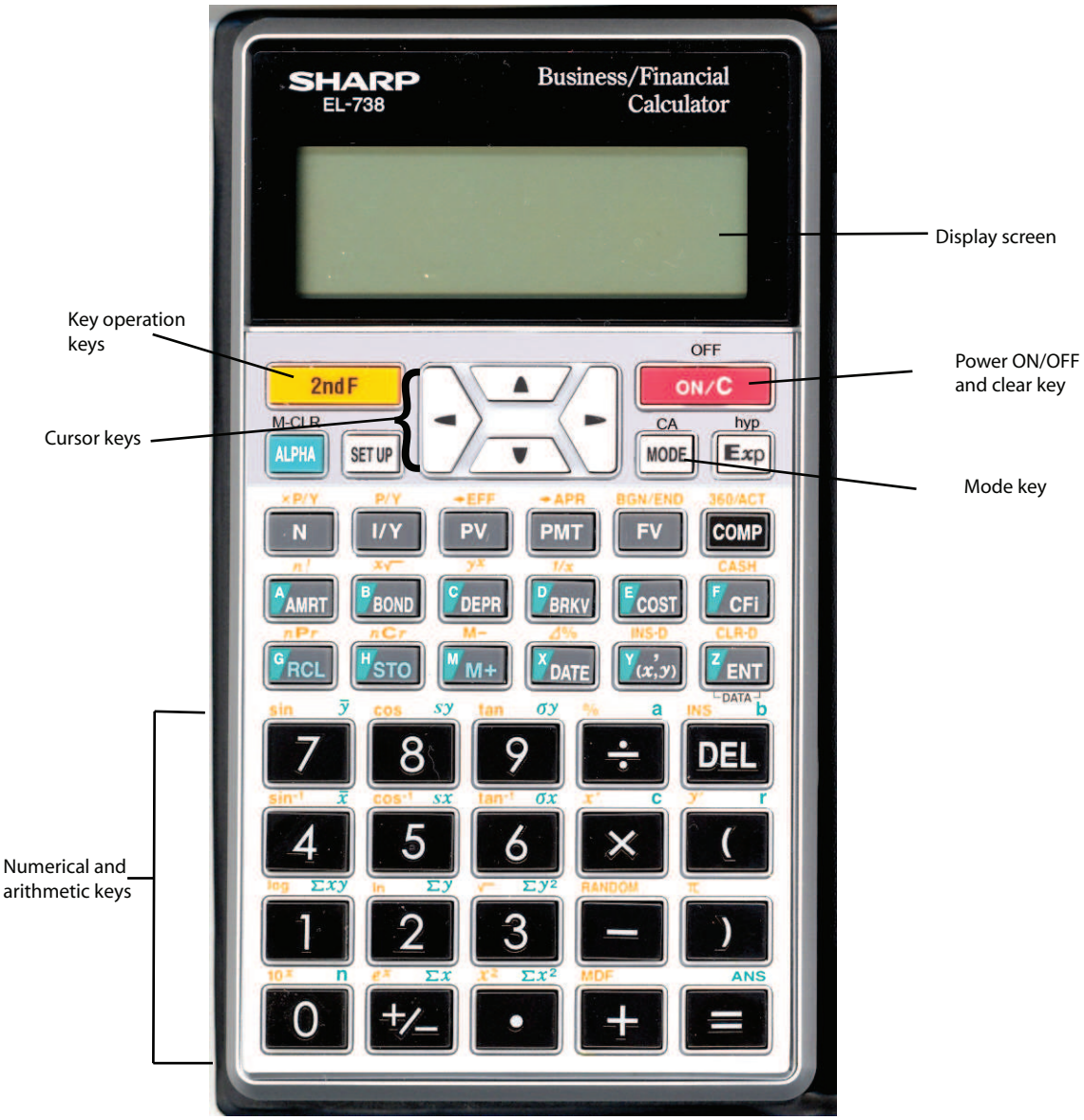
SHARP
EL-738
Business/Financial
Calculator
Display screen
Key operation
keys
Cursor keys
Power ON/OFF
and clear key
Mode key
Numerical and
arithmetic keys
2nd F
ON/C
OFF
M-CLR
CA
hyp
ALPHA
SET UP
MODE
Exp
N
I/Y
PV
PMT
FV
COMP
AMRT
BOND
DEPR
BRKV
COST
CFi
RCL
STO
M+
DATE
ENT
DEL

9.2 Switch on your calculator

Before using your calculator for the first time, reset (initialise) it. Press the RESET switch located on the back of the calculator with the tip of a ball-point pen.

After the calculator has been reset, the initial display of the NORMAL mode will appear.

NOTE:

Pressing [2ndF] [M-CLR] 1 [=] will also erase all stored data in the memory and restore the calculator's default setting.

Note that the numbers 0 to 9 will not be written in blocks in explanations. All the other functions will be written in blocks, as in the previous sentence.

9.2.1 The SETUP menu

Press the [SET UP] key to display the SETUP menu.

will appear on the screen. If you press the [▶] arrow three times.

will appear on the screen.

A menu item can be selected by using the [◀] [▶] keys (the selected number will blink) and then pressing the [=] key.

To set the number of decimals to be displayed:

Press [SET UP] 0 0.

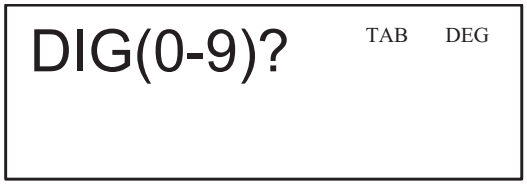

will appear on the screen.

Press 4 to select 4 decimals

In short, if you want four decimals, press **SETUP**, 0, 0, 4.

If you want two decimals, press **SET UP** 0, 0, 2.

We prefer to use four decimals and to round off ourselves when necessary, therefore press **SET UP** 0, 0, 4.

NOTE: Keep in mind that the calculator displays a decimal point (0.0000), whereas we use the decimal comma (0,00) in South Africa.

9.3 Selecting a MODE

Press **MODE**.

The menu display will appear.

Press 0 because you need the NORMAL mode.

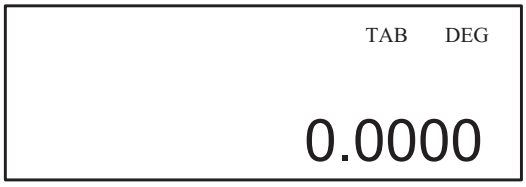

will appear on the screen.

The NORMAL mode allows you to perform financial, arithmetic and scientific calculations.

(In this module, we do not use the STATISTICAL mode.)

9.4 Calculator keys

The keys are classified according to the functions they perform.

The following keys are worth mentioning:

- ON: [ON/C]

  The [ON/C] key is the last key in the first row. Press this key to switch the calculator on. The [ON/C] key also clears the screen. To preserve the batteries the calculator turns itself off after about 10 minutes if not in use.

- OFF: OFF [ON/C]

  OFF is the orange function above the red [ON/C] key. Press [2ndF] [ON/C] to switch your calculator off.

- NUMERIC KEYS: 1, 2, 3 .... $9, 0$

  These keys are used to enter numbers.

- MULTIPLICATION [X]

  Second last key, third last row

- DIVISION [÷]

  Second last key, sixth row

- EQUAL [=]

  Last key, last row

- CLEAR [ON/C]

  Last key, first row

- BRACKETS [(] [)]

  Last key, third last row and second last row, respectively.

  Use the [(] and [)] keys to place parentheses around parts of expressions. The closing parenthesis [)] may be omitted.

- NEGATIVE [+/-]

  Second key, last row

  This key is used to enter a negative number or to change the sign of a number, while the [−] key is used for the operation of subtraction. Note the different ways in which subtraction, with the long dash, and the sign of the number, with a small dash, are displayed.

  For example: $3 - 2$ and $3 + (-2)$

  Example:

  Add 8 to -5.

  Press 8 [+] [+/-] 5 [=]

The answer is 3.

Subtract −5 from 8.

Press 8 [−] [±] 5 [=]

The answer is 13.

Subtract −5 from −8.

Press [+/-] 8 [−] [+/-] 5 [=]

The answer is −3.

Add −5 to −8.

Press [+/-] 5 [+] [+/-] 8 [=]

The answer is −13.

- DELETE: [DEL]

  If you made a mistake, press [DEL] (last key, sixth row) to erase the last number and then enter the correct number to continue.

  If you want to change a number or sign after you have pressed [=], use the [◄] cursor to move to the place where you want to change it. Enter the new number or sign, then press [DEL] and continue.

- INSERT: [INS]

  Use the [◄] cursor to move to the place where you want to insert a number. Press [2ndF] [INS] (sixth row, last key) and enter the number. The cursor will flicker after the inserted number.

- KEY [y^x]

  [2ndF] and third key, fourth row

  Example:

  Calculate 2^3.

  Enter the base number first − press 2.

  Then press [2ndF] [y^x] 3 [=]

  The answer is 8,00.

  If the power consists of more than one term, use brackets for the power.

  Example:

  Calculate $\left(3^2\right)^4$.

  Press [(] 3 [2ndF] [y^x] 2 [)] [2ndF] [y^x] 4 [=] or 3 [2ndF] [y^x] 2 [=] [2ndF] [y^x] 4 [=]

  The answer is 6 561,00.

  Example:

  Calculate $5^{2/3}$.

  Press 5 [2ndF] [y^x] [(] 2 [÷] 3 [)] [=]

  The answer is 2,92.

- SQUARE: (x^2)

  Use the power key.

  Example:

  Calculate 4^2.

  Press 4 [2ndF] [y^x] 2 [=], or alternatively, 4 [2ndF] [x^2]

  The answer is 16.

  Example:

  Calculate 10^{-1}.

  Press 10 [2ndF] [y^x] [+/-] 1 [=]

  The answer is 0,10.

  Calculate $\frac{2}{5^2}$.

  Press 2 [÷] 5 [2ndF] [y^x] 2 [=]

  The answer is 0,08.

  Calculate $\left(\frac{2}{5}\right)^2$.

  Press [(] 2 [÷] 5 [)] [2ndF] [y^x] 2

  The answer is 0,16.

- SQUARE ROOT: $\sqrt{x}$

  You can use the [$\sqrt[x]{\ }$] key. Press [2ndF] and the second key, in the fourth row.

  Example:

  Calculate $\sqrt{64}$. $\sqrt{64}$ means $\sqrt[2]{64}$.

  Press 2 [2ndF] [$\sqrt[x]{\ }$] 64 [=]

  The answer is 8.

  Alternatively, press [2ndF] [$\sqrt{\ }$] 64 [=]. [$\sqrt{\ }$] is the third key in the second last row.

  Example:

  Calculate $\sqrt[3]{64}$.

  Press 3 [2ndF] [$\sqrt[x]{\ }$] 64 [=]

  The answer is 4.

  Example:

  Calculate $\sqrt[4]{3^3}$.

  Press 4 [2ndF] [$\sqrt[x]{\ }$] 3 [2ndF] [y^x] 3 [=]

  The answer is $2{,}2795 \approx 2{,}28$.

- NUMERIC FRACTIONS

  Example:

  Calculate $\frac{3}{4} - \frac{1}{2}$.

  Press 3 [÷] 4 [−] 1 [÷] 2 [=]

  The answer is 0,25.

  Calculate $\frac{1}{2} + \frac{2}{3} + \frac{3}{5}$.

  Press 1 [÷] 2 [+] 2 [÷] 3 [+] 3 [÷] 5 [=]

  The answer is 1,7667 ≈ 1,77.

- LOGARITHM to the base e: ln

  Example:

  Calculate ln 3.

  Press [2ndF] [ln], (second key, second last row) 3 [=]

  The answer is 1,0986 ≈ 1,10.

  Example:

  Calculate $\ln\left(\frac{1\,253}{1479}\right)$.

  Press [2ndF] ln [(] 1 253 [÷] 1 479 [=]

  The answer is −0,1658 ≈ −0,17.

- THE EXPONENTIAL FUNCTION: e^x – the inverse of ln.

  Example:

  Calculate $e^{1,10}$.

  Press [2ndF] [e^x] (second key, last row) 1.10 [=]

  The answer is 3,0042 ≈ 3.

- MEMORY: M+

  The calculator has 11 temporary memories (A-H and X-Z), one independent memory (M) and one last answer memory (ANS).

  Temporary memory:

  To store a value, press [STO] and the variable in which you want to store it.

  Example: Store 17 in A.

  Press 17 [STO] (fifth row, second key) [A] (first key, fourth row).

will appear on the screen.

If you want to recall the value stored in A, press **RCL** (first key, fifth row) **A**.

```
                    TAB   DEG
A=
                    17.00
```

will appear on the screen.

Store a value (sum) in the independent memory M+:

Example: Store 19, 21 and 25 in M+.

Press 19 **M+** (third key, fifth row).

Press 21 **M+**

Press 25 **M+**

To find the answer, press **RCL** **M+**.

The answer is 65.

To clear the register:

Press **2ndF** **M-CLR** (first key, second row).

```
                    TAB   DEG
M MEM          RESET
  0              1
```

will appear on the screen.

Press 0.

```
                    TAB   DEG
M CLR_MEMORY?
  0
```

will appear on the screen.

Press 0.

```
                    TAB   DEG

                    0.0000
```

will appear on the screen.

- ERROR

  If ERROR 1 appears on the screen after you have done a calculation, press the [◀] key and the cursor will flicker where you made the mistake. Press [DEL] and continue by pressing [=].

- PERCENTAGE (fourth key, sixth row)

  Example:

  Calculate 25% of R1 800.

  Press 1 800 [×] 25 [2ndF] [%].

  The answer is 450,00.

- Pi: [π]

  [2ndF] [π] last key, second last row.

9.5 Financial calculator mode

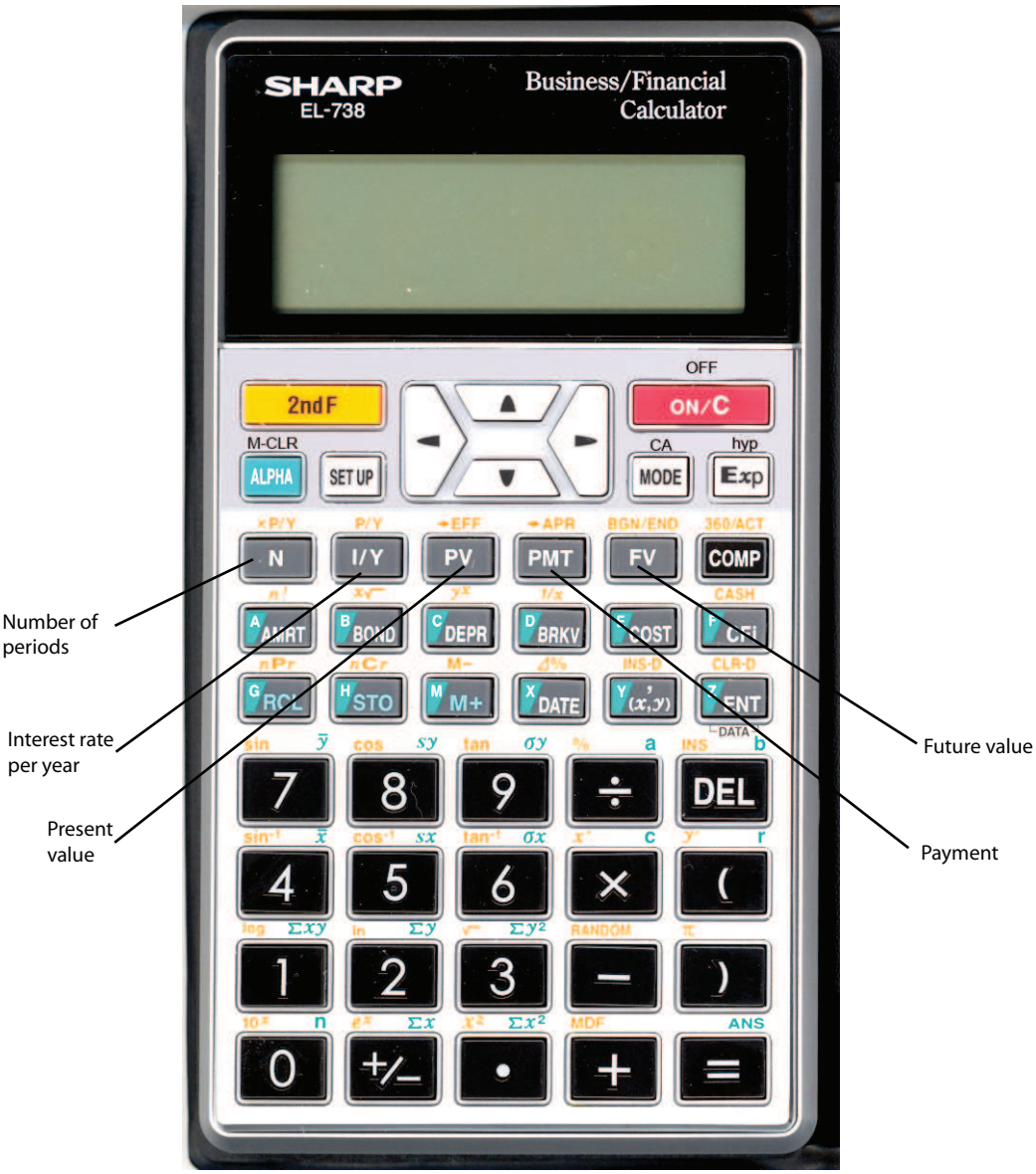

The NORMAL mode allows you to use the financial keys. The financial keys are **N**, **1/Y**, **PV**, **PMT**, **FV** and **AMRT**.

Before using the financial keys, first clear the register by pressing **2ndF** **M-CLR** 0, 0.

9.6 Interest rates

9.6.1 Simple interest

Note:

We do **not** use the financial keys on the calculator for Simple Interest problems.

Example 1.

Determine the amount of interest received if R1 200 is invested for 4 years at 14% simple interest per year.

The correct formula to use is

$$\begin{aligned} I &= Prt \\ &= 1\,200 \times 14\% \times 4 \\ &= 1\,200 \times 0{,}14 \times 4 \\ &= 672{,}0000 \end{aligned}$$

The interest received is R672,00.

Steps on the calculator:

1 200 [×] 0.14 [×] 4 [=]

The answer is 672,0000.

Example 2.

Determine the accumulated amount if R2 400 is invested for 42 months at a 9% simple interest rate per year.

The correct formula to use is

$$\begin{aligned} S &= P\,(1 + rt) \\ S &= 2\,400\left(1 + 9\% \times \tfrac{42}{12}\right) \\ &= 2\,400\left(1 + 0{,}09 \times \tfrac{42}{12}\right) \\ &= 3\,156{,}0000 \end{aligned}$$

The accumulated amount is R3 156,00.

Calculator steps:

2 400 [(] 1 [+] 0.09 [×] 42 [÷] 12 [)] [=]

The answer is 3 156,00.

Example 3.

Determine the simple interest rate if R3 600 accumulates to R5 760 in 5 years' time.

$$\begin{aligned} S &= P\,(1 + rt) \\ \text{i.e. } 1 + rt &= \tfrac{S}{P} \\ \text{i.e. } rt &= \tfrac{S}{P} - 1 \\ \text{i.e. } t &= \left(\tfrac{S}{P} - 1\right) \div t \\ \text{i.e. } r &= \left(\tfrac{5\,760}{3\,600} - 1\right) \div 5 \\ \text{i.e. } r &= 0{,}1200 \end{aligned}$$

The simple interest rate is 12%.

Calculator steps:

[(] 5 760 [÷] 3 600 [−] 1 [)] [÷] 5 [=]

The answer is 0,12, that is, 12%.

Note:

Be careful when your calculator is SET UP to display only two decimal digits. If you use the ordinary keys on the financial calculator to find the simple interest rate, the calculator gives an answer rounded to two decimal digits. You have to go further and multiply this answer by 100 on the calculator to find the exact simple interest rate **as a percentage** to two decimals digits.

9.6.2 Compound interest

There are two methods to do Compound Interest calculations:

1. by substituting into the correct **formula** and using the ordinary calculator keys on the calculator
2. by using the **financial keys** on the calculator.

Example 1.

Calculate the future value if R5 000 is invested for five years at 15% per year, compounded **monthly**.

Method 1: By substituting in the formula:

$$\begin{aligned} S &= P\,(1+i)^n \\ &= P\left(1+\tfrac{j_m}{m}\right)^{tm} \\ &= 5\,000\left(1+\tfrac{0{,}15}{12}\right)^{5\times 12} \\ &= 10\,535{,}9067 \end{aligned}$$

The future value is R10 535,91.

Steps by using ordinary calculator keys:

5 000 [(] 1 [+] 0,15 [÷] 12 [)] [2ndF] [y^x] 60 [=]

Method 2: By using the financial keys on the calculator:

[2ndF] [CA]	(This is **always** the first step in financial calculations. It clears the register.)
[2ndF] [P/Y] 12 [ENT] [ON/C]	(This is **always** the 2nd step. It registers the number of compounding periods per year.)
[+/−] 5 000 [PV]	(**Always** enter [±] before the first given value.)
15 [I/Y]	(**Always** enter the interest rate here as a percentage and NOT as a decimal.)
5 [2ndF] [×P/Y] [N]	(**Always** enter these three keys, in this specific order, after the time period of the investment, in years.)
[COMP] [FV]	(Lastly, compute what is required in the question.)

The number 10 535,9067 is displayed, which is R10 535,91.

Note:

Distinguish between the **P/Y** and **× P/Y** keys on the calculator.

Example 2.

Determine the time under consideration if R5 000 is invested at 15% per year, compounded **half-yearly**, and the accumulated amount is R10 000.

Method 1: By substituting in the formula:

$$\begin{aligned} S &= P\,(1+i)^n \\ 10\,000 &= 5\,000\left(1+\tfrac{0{,}15}{2}\right)^{t\times 2} \\ t &= 4{,}79 \quad \text{(See the note below.)} \end{aligned}$$

Note:

To find the value of an unknown in the exponent, one needs to have the mathematics knowledge of logarithms. However, logarithms are not included in the syllabus of this module, and are not explained in the study guide. Therefore, we have to use the financial keys on the calculator in these cases.

Method 2: By using the financial keys on the calculator:

2ndF **CA**	(This is **always** the first step. It clears the register.)
2ndF **P/Y** 2 **ENT** **ON/C**	(This is **always** the second step. It registers the number of compounding periods per year).
+/− 10 000 **FV**	(**Always** enter ± before the first given value.)
5 000 **PV**	
15 **I/Y**	(**Always** enter the interest rate here as a percentage and NOT as a decimal.)
COMP **N**	(Lastly, compute what is required in the question.)

N = 9.5844 appears on the screen, which is 9,5844 half-years.

We divide this answer by 2 because the number of compounding periods per year is 2 (semi-annually).

Press **÷** 2 **=**.

4.7922 appears on the screen.

The time under consideration is thus 4,79 years.

9.7 Annuities

9.7.1 Present value

Example 3.

Calculate the present value of an annuity if quarterly payments of R1 600 are made for 5 years at an interest rate of 20% per year, compounded **quarterly**.

Method 1: By using the Present Value formula:

$$\begin{aligned} P &= R\left[\frac{(1+i)^n-1}{i(1+i)^n}\right] \\ P &= 1\,600\left[\frac{\left(1+\frac{0{,}20}{4}\right)^{5\times4}-1}{\frac{0{,}20}{4}\left(1+\frac{0{,}20}{4}\right)^{5\times4}}\right] \\ &= 19\,939{,}5365 \end{aligned}$$

The present value is R19 939,54. (See calculator steps below.)

Calculator steps:

1 600 [×] [(] [(] 1 [+] 0,20 [÷] 4 [)] [2ndF] [y^x] 20 [−] 1 [)] [÷] [(] 0.20 [÷] 4 [×] [(] 1 [+] 0.20 [÷] 4 [)] [2ndF] [y^x] 20 [)] [=]

Method 2: By using the financial calculator keys:

[2ndF] [CA]

[2ndF] [P/Y] 4 [ENT] [ON/C]

[+/−] 1 600 [PMT]

5 [2ndF] [×P/Y] [N]

20 [I/Y]

[COMP] [PV]

The answer is 19 939,5365, which is R19 939,54.

9.7.2 Future value

Example 4.

Determine the future value of an annuity if monthly payments of R400 are made for 5 years at 16% interest per year, compounded **monthly**.

Method 1: By substituting in the future value formula:

$$\begin{aligned} S &= R\left[\frac{(1+i)^n-1}{i}\right] \\ &= 400\left[\frac{\left(1+\frac{0{,}16}{12}\right)^{12\times5}-1}{\frac{0{,}16}{12}}\right] \\ &= 36\,414{,}2065 \end{aligned}$$

The future value is thus R36 414,21.

Calculator steps:

400 [×] [(] [(] 1 [+] 0,16 [÷] 12) [2ndF] [y^x] 60 [−] 1 [)] ÷ [(] 0.16 [÷] 12 [)] [=]

Method 2: By using the financial keys on the calculator:

2ndF **CA**

2ndF **P/Y** 12 **ENT** **ON/C**

+/− 400 **PMT**

5 **2ndF** ×**P/Y** **N**

16 **I/Y**

COMP **FV**

The answer is 36 414,2065, which is R36 414,21.

9.8 Amortisation

Example 5.

Draw up an amortisation schedule for a loan of R5 000 that is repaid in **annual** payments over five years at an interest rate of 15% per year, by using the financial keys on the calculator.

Note:

- We use the financial keys on the calculator for amortisation calculations because drawing up an amortisation schedule by using the formula is time consuming.
- Always find the minimum monthly payment first when drawing up an amortisation schedule.

By using the financial keys on the calculator:

2ndF **CA**

2ndF **P/Y** 1 **ENT** **ON/C**

+/− 5 000 **PV**

5 **2ndF** ×**P/Y** **N**

15 **I/Y**

COMP **PMT**

1 491.5778 appears on the screen. (This is the minimum monthly payment.)

Subsequent steps:

Press **AMRT** (fourth row, first key) 1 **ENT**

▼ (Down arrow) 1 **ENT**

Press [▼] BALANCE = −4 258.4222 appears on the screen, which is R4 258,42, after one payment.

Press [▼] $\sum$ PRINCIPAL = 741.5778 appears on the screen, which means R741,58 of the Principal is paid off.

Press [▼] $\sum$ INTEREST = 750.0000 appears on the screen, which means R750.00 goes for Interest.

Press [[▼] 2 [ENT]] twice.

Press [▼] BALANCE = −3 405.6077 appears on the screen, that is R3 405,61.

Press [▼] $\sum$ PRINCIPAL = 852.8145 appears on the screen, that is R852,81.

Press [▼] $\sum$ INTEREST = 638.7633 appears on the screen, that is R638,76.

Press [[▼] 3 [ENT]] twice.

Press [▼] BALANCE = −2 424.8711, that is R2 424,87.

Press [▼] $\sum$ PRINCIPAL = 980.7366, that is R980,74.

Press [▼] $\sum$ INTEREST = 510.8412, that is R510,84.

Press [[▼] 4 [ENT]] twice.

Press [▼] BALANCE = −1 297.0240, that is R1 297,02.

Press [▼] $\sum$ PRINCIPAL = 1 127.8471, that is R1 127,85.

Press [▼] $\sum$ INTEREST = 363.7307, that is R363,73.

Press [[▼] 5 [ENT]] twice.

Press [▼] BALANCE = 0.0002, that is R0,00.

Press [▼] $\sum$ PRINCIPAL = 1 297.0242, that is R1 297,02.

Press [▼] $\sum$ INTEREST = 194.5536, that is R194,55.

Note:

The	PRINCIPAL	+	the INTEREST	=	the PAYMENT
e.g.	1297.0242	+	194.5536	=	1491.5778, or
	1127.8471	+	363.7307	=	1491.5778, or
	980.7366	+	510.8412	=	1491.5778, or
	852.8145	+	638.7633	=	1491.5778, or
	741.5778	+	750.000	=	1491.5778, or
	⋮		⋮		⋮

10 ASSIGNMENTS

FOR SEMESTER 1 STUDENTS ONLY
ASSIGNMENT 01
Study material: Chapters 1, 2 and 3 in the Study Guide
Unique assignment number: **753641**
FIXED DUE DATE: 19 MARCH 2018

Important:

- This is a multiple-choice assignment that must be answered and submitted ONLINE using myUnisa. Go to **Assessment Info** on the BNU1501 module site and follow the steps.
- Always keep your detailed workings in a file so that you can compare your solutions to the ones that will be published on the module site on myUnisa after the due date. **Also, keep a copy of the options you have chosen, in case of a query.**
- The due date date of this assignment is **fixed**. No extension can be granted because the solutions are posted on the BNU1501 module site shortly after the closing date.

Question 1

Round 10,99458 off to three decimal digits.

[1] 10,994

[2] 11,900

[3] 10,996

[4] 10,995

Question 2

Round 10,99458 off to two decimal digits.

[1] 10,90

[2] 10,99

[3] 10,10

[4] 11,00

Question 3

Round 10,99458 off to the first decimal digit.

[1] 10,9

[2] 20,0

[3] 11,0

[4] 11,9

Question 4

Suppose an ice cream costs twice as much as a chocolate. If the ice cream costs x rand, how much, in terms of x, does the chocolate cost?

[1] $\frac{x}{2}$ rand

[2] $2x$ rand

[3] $(x + 2)$ rand

[4] $\frac{2}{x}$ rand

Question 5

Refer to question 4 above.
Suppose John buys a chocolate and an ice cream. How much, in terms of x, does he pay for them?

[1] $(x + 2x)$ rand

[2] $(x + \frac{x}{2})$ rand

[3] $2x$ rand

[4] $2(x + 2x)$ rand

Question 6

Refer to questions 4 and 5 above.
How much change will John receive if he pays with a R50 note for the chocolate and ice cream? (Assume that the cost of a chocolate and an ice cream is less than R50.)

[1] $\left(50 - x + \frac{x}{2}\right)$ rand

[2] $\left(x + \frac{x}{2} - 50\right)$ rand

[3] $\left(50 - x - \frac{x}{2}\right)$ rand

[4] $(50 - x + 2x)$ rand

Question 7

A cast-iron rod is 30 metres long. It has to be cut in two pieces such that the one piece is 8 metres longer than the other. Suppose the longer piece is p metres. How long, in terms of p, should the shorter piece be?

[1] $(8 - p)$ metres

[2] $(8 + p)$ metres

[3] $(p - 4)$ metres

[4] $(p - 8)$ metres

Question 8

John travels x kilometres in 3 hours, at a certain average speed. An expression, in terms of x, for the distance that John travels in 5 hours, at the same average speed, is ...

[1] $5x$ km

[2] $\frac{3x}{5}$ km

[3] $\frac{5x}{3}$ km

[4] $15x$ km

Question 9

A biscuit manufacturer uses 200 grams of flour, 50 grams of sugar and 100 grams of butter for each packet of biscuits produced. What amount of butter is needed to produce x packets of biscuits?

[1] $100x$ kg

[2] $0{,}1x$ kg

[3] 0,01 kg

[4] $\frac{x}{0{,}01}$ kg

Question 10

Simplify the following expression as far as possible:

$$xy + 3x^2y + 1 + 2xy^2 + yx^2 + 2 + yx$$

[1] $2xy + 4x^2y + 2xy^2 + 3$

[2] $11x^2y^2$

[3] $x^2y^2 + 4x^4y^2 + 3 + 2xy^2$

[4] $2xy + 6x^2y + 3$

Question 11

Simplify the following expression as far as possible:

$$\sqrt{36a^{16}b^{36}}$$

[1] $6a^8b^{18}$

[2] $6a^4b^6$

[3] $18a^8b^{18}$

[4] $18a^4b^6$

Question 12

Simplify the following expression as far as possible:

$$2y^2(x-1) - 8x\left(y^2+1\right)$$

[1] $2yx^2 - 2y^2 - 8xy^2 - 8x$

[2] $-6xy^2 - 2y^2 - 8x$

[3] $8x - 2y^2 - 6y^2x$

[4] $-x - y^2 - 6xy^2$

Question 13

Simplify the following expression as far as possible:

$$\left(3ab^2c^3\right)^2 \div (ab) \times \left(2a^3b^4\right)$$

[1] $6b^7c^6a^4$

[2] $18a^4b^4c^5$

[3] $12a^4b^7c^6$

[4] $18a^4b^7c^6$

Question 14

Write $\frac{101}{10}$ as a mixed fraction.

[1] $1\frac{1}{10}$

[2] $1\frac{1}{101}$

[3] $10\frac{1}{10}$

[4] $10\frac{1}{101}$

Question 15

Write $8\frac{2}{3}$ as an improper fraction.

[1] $\frac{16}{24}$

[2] $\frac{26}{3}$

[3] $\frac{16}{3}$

[4] $\frac{10}{3}$

Question 16

Determine the LCM (Lowest Common Multiple) of the following three numbers:

$$4, 16 \text{ and } 14$$

[1] 224

[2] 896

[3] 112

[4] 16

Question 17

Determine the LCM of the following three terms:

$$x^2y^2, x^2y^3 \text{ and } x^3y^2$$

[1] x^3y^3

[2] xy

[3] x^7y^7

[4] x^2y^3

Question 18

Determine the LCM of the following three terms:

$$8ab, 14a^3b^2 \text{ and } 12a^2b^3$$

[1] $168ab$

[2] $1344a^3b^2$

[3] $336a^6b^6$

[4] $168a^3b^3$

Question 19

Simplify the following expression as far as possible without using a calculator:

$$\frac{2}{3} + \frac{3}{7} - \frac{1}{2}$$

[1] $\frac{1}{2}$

[2] $\frac{67}{42}$

[3] $\frac{25}{42}$

[4] $\frac{1}{7}$

Question 20

Simplify the following expression as far as possible without using a calculator:

$$\frac{3}{4} \div \frac{1}{6} \times \frac{5}{4}$$

[1] $3\frac{3}{5}$

[2] $5\frac{5}{8}$

[3] $\frac{5}{32}$

[4] $\frac{5}{18}$

Question 21

Simplify the following expression as far as possible without using a calculator:

$$\frac{3}{4} + \frac{8}{9} \div \frac{4}{3}$$

[1] $2\frac{5}{27}$

[2] $2\frac{1}{4}$

[3] $1\frac{5}{12}$

[4] $\frac{5}{7}$

Question 22

Simplify the following expression as far as possible without using a calculator:

$$\frac{2}{a} + \frac{3}{ab}$$

[1] $\dfrac{5}{2ab}$

[2] $\dfrac{4b+6}{2ab}$

[3] $\dfrac{5}{a}$

[4] $\dfrac{2b+3}{ab}$

Question 23

Write $\frac{3}{8}$ as a decimal number, rounded to three decimal digits, without using a calculator.

[1] 0,375

[2] 3,800

[3] 0,380

[4] 2,667

Question 24

Write 0,725 as an ordinary fraction.

[1] $\frac{29}{40}$

[2] $7\frac{1}{4}$

[3] $\frac{29}{4}$

[4] $\frac{13}{20}$

Question 25

Write $3\frac{5}{9}$ as a decimal number, rounded to three decimal digits, without using a calculator.

[1] 0,555

[2] 3,556

[3] 3,600

[4] 0,556

Question 26

Write 2,752 as an ordinary mixed fraction in its simplest form.

[1] $2\frac{3}{4}$

[2] $2\frac{94}{125}$

[3] $\frac{94}{125}$

[4] $2\frac{188}{250}$

Question 27

Simplify the following expression as far as possible:

$$2 \cdot 3^2 \cdot 2^3 + 3^3$$

[1] 315

[2] 248 859

[3] 171

[4] 15 579

Question 28

The ratio of the female teachers to male teachers in a school is 4 : 3. If there are 12 male teachers at the school, how many teachers are there in total?

[1] 28

[2] 16

[3] 25

[4] 14

Question 29

Anna won R250 000 in a competition. She wants to share the money with her three sisters in a ratio of 4 : 1 : 3 : 2 for herself and her sisters, Linda, Sophia and Mary, respectively. The amount of money that Sophia will get is ...

[1] R25 000

[2] R100 000

[3] R50 000

[4] R75 000

Question 30

The increasing block tariffs per month for residential electricity for the 2016/2017 financial year are given below. The tariffs do not include VAT.

Domestic supply / Usage in kWh	Rand per kWh (kilowatt hour)
0-100 kWh	1,3032
101-400 kWh	1,5250
401-650 kWh	1,6610
More than 650 kWh	1,79

What will the electricity bill (without VAT) be for a month in which a household uses 600 kWh of electricity?

[1] R996,00

[2] R2 693,52

[3] R920,02

[4] R1 072,52

END OF ASSIGNMENT 01 OF SEMESTER 1

FOR SEMESTER 1 STUDENTS ONLY

ASSIGNMENT 02

Study material: Chapters 4, 5, 6 and 7 in the Study Guide

Unique assignment number: **746855**

FIXED DUE DATE: 18 APRIL 2018

Important:

- This is a multiple-choice assignment that must be answered and submitted ONLINE using myUnisa. Go to **Assessment Info** on the BNU1501 module site and follow the steps.
- Always keep your detailed workings in a file so that you can compare your solutions to the ones that will be published on the module site on myUnisa after the due date. **Also, keep a copy of the options you have chosen, in case of a query.**
- The due date of this assignment is **fixed**. No extension can be granted because the solutions are posted on the BNU1501 module site shortly after the closing date.

Question 1

Consider the sketch below. Calculate the perimeter of the shaded part of the figure.

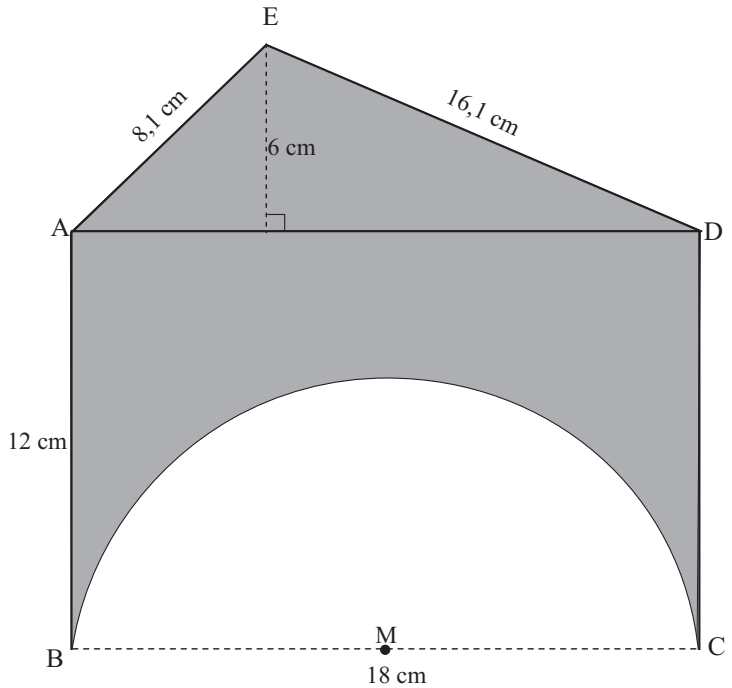

[1] 104,75 cm

[2] 64,47 cm

[3] 76,47 cm

[4] 142,77 cm

Question 2

Refer to the sketch in question 1 above.
Calculate the area of the shaded region.

[1] $238{,}94\,\text{cm}^2$

[2] $142{,}77\,\text{cm}^2$

[3] $397{,}23\,\text{cm}^2$

[4] $241{,}73\,\text{cm}^2$

Question 3

A plastic rectangular container with a length of 40 cm, a breadth of 30 cm and a height of 10 cm contains 12 identical cans each with a diameter of 10 cm and a height of 10 cm. The remaining space is filled with cold water to keep the cans cool. How much water is required in litres?

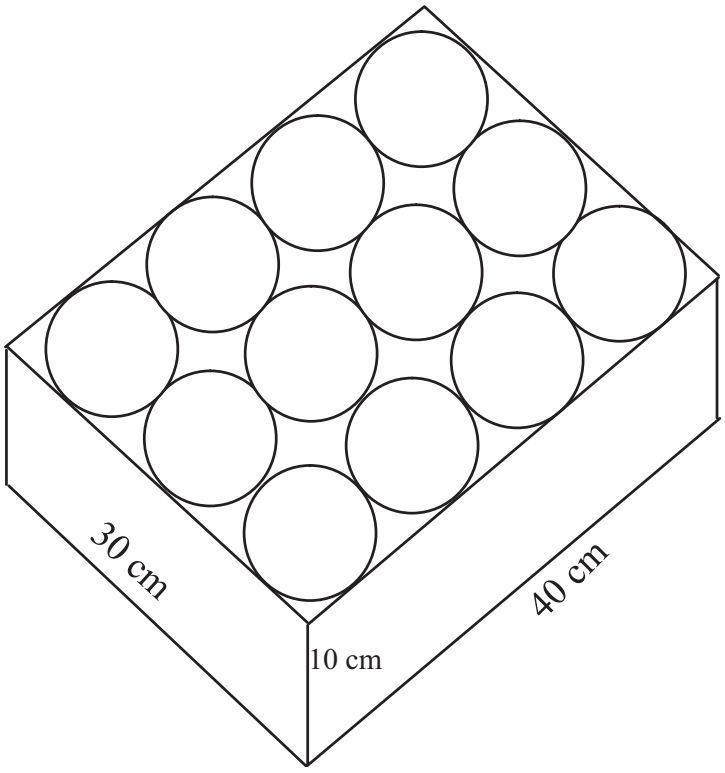

[1] $10{,}06\,\ell$

[2] $25{,}70\,\ell$

[3] $11{,}21\,\ell$

[4] $2{,}58\,\ell$

Question 4

A rectangular glass tank is half filled with water. The measurements of the tank are given in the diagram below. By how much, in terms of centimetres, will the water level rise if a solid cylindrical piece of iron, with a diameter of 6 cm and a length of 10 cm, is dropped into the water? The answer, rounded to two decimal digits, is ...

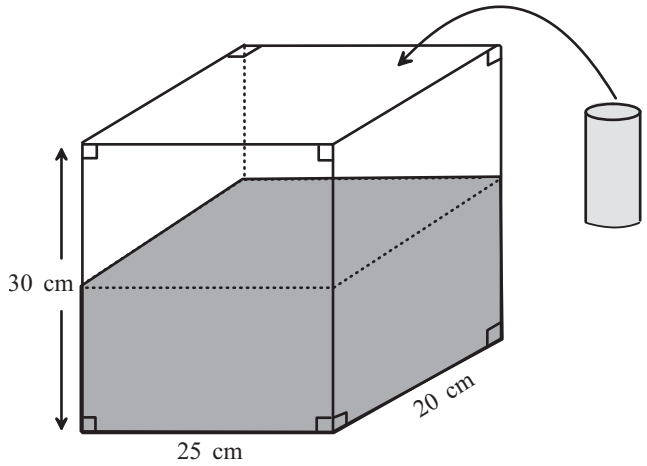

[1] 0,57 cm

[2] 0,28 cm

[3] 2,26 cm

[4] 0,38 cm

Question 5

Suppose a circular fish pond has to be sealed on the inside. The diameter of the pond is 3 metres and the depth is $1\frac{1}{2}$ metres. One litre of sealer covers 3 square metres. How many two-litre tins of sealer have to be purchased to complete the sealing job?

[1] 8

[2] 7

[3] 3

[4] 4

Question 6

In the diagram below, we have a circle with centre M and a diameter of 80 mm. There is a right-angled triangle inside the circle with two vertices on the circumference of the circle, and the third vertex at the origin M. The shaded area in the diagram, rounded to one decimal digit, is ...

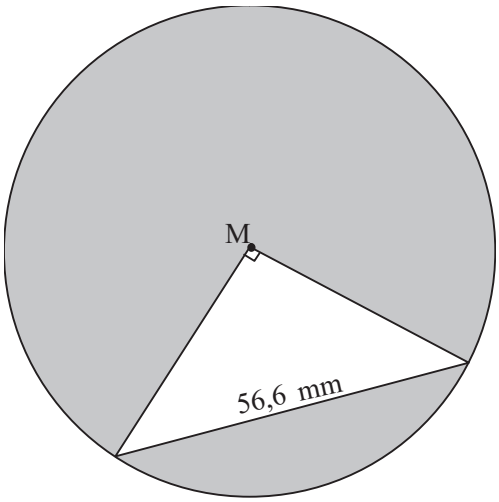

[1] 38,9 cm^2

[2] 4,2 cm^2

[3] 42,3 cm^2

[4] 169,1 cm^2

Question 7

Solve the following equation:

$$2(2y-1)-3y=4-y$$

[1] $y=\frac{5}{2}$

[2] $y=3$

[3] $y=0$

[4] $y=-2$

Question 8

Solve for x in the following equation:

$$\frac{2x}{5}-\frac{1}{2}=\frac{x}{5}$$

[1] $x=2\frac{1}{2}$

[2] $x=\frac{5}{6}$

[3] $x=\frac{2}{5}$

[4] $x=-\frac{5}{6}$

Question 9

If $F = \frac{9}{5}C + 32$, make C the subject of the formula.

[1] $C = \frac{5F - 32}{9}$

[2] $C = \frac{5F}{9} + \frac{160}{9}$

[3] $C = \frac{5}{9}F - \frac{160}{9}$

[4] $C = \frac{5F + 32}{9}$

Question 10

If $V = \ell \times b \times h$, make h the subject of the formula.

[1] $h = V - \ell - b$

[2] $h = \frac{V}{\ell \times b}$

[3] $h = V \times \ell \times b$

[4] $h = \frac{\ell \times b}{V}$

Question 11

Determine the equation of the straight line that passes through points $(3; -2)$ and $(5; -6)$.

[1] $y = -4x + 14$

[2] $y = 2x - 8$

[3] $y = 2x - 4$

[4] $y = -2x + 4$

Question 12

Braun invested R8 350 in an account that pays simple interest. After six years, he received an accumulated amount of R12 859. The simple interest rate on the investment, rounded to two decimal digits, was ...

[1] 9,00%

[2] 7,45%

[3] 6,00%

[4] 0,09%

Question 13

Determine the amount that has to be invested now, to be worth R10 000 in 8 months' time, if the annual simple interest rate is 9,75%.

[1] R9 389,67

[2] R9 398,61

[3] R1 333,33

[4] R6 060,61

Question 14

Helen needs R20 000 in three years' time. What is the least amount that she should deposit now into an account that offers an annual interest rate of 15%, compounded every 3 months, to have the required amount by then? The answer, to the nearest rand, is ...

[1] R13 793

[2] R12 858

[3] R19 910

[4] R12 892

Question 15

How much, to the nearest rand, can Lerato borrow from a bank if she can repay the loan by means of quarterly payments of R2 000, starting at the end of the first quarter? The interest rate is 18% per annum, compounded quarterly and the duration of the loan is 10 years.

[1] R214 061

[2] R15 825

[3] R36 803

[4] R17 504

Question 16

Sam plans to buy a car for R125 000. He pays a 15% deposit and manages to secure a bank loan for the outstanding amount. The bank charges 12,5% per annum, compounded monthly. Determine what Sam's minimum monthly payment will be if the loan has to be repaid in six years' time.

[1] R998,17

[2] R2 104,94

[3] R2 476,40

[4] R1 476,69

Question 17

Consider the amortisation of Sam's loan in question 16 above.
What will the outstanding amount on Sam's loan be after 3 years' minimum payments have been made? Assume the interest rate stayed fixed for the whole period.

[1] R103 224,20

[2] R53 125,00

[3] R62 921,07

[4] R74 024,78

Question 18

Consider the amortisation of Sam's loan in question 16 above. Suppose Sam pays all minimum monthly payments on time into this loan account . In which month will the principal that is paid off in that month for the first time be more than the interest paid off?

[1] 36th month

[2] 7th month

[3] 1st month

[4] 12th month

Question 19

Consider Sam's loan in question 16 above.
Suppose Sam decides to pay R2 500 monthly into this loan account from the start. How long will it take Sam to pay off the loan?

[1] 4,7 years

[2] 3,5 years

[3] 56,4 years

[4] 14,1 years

Question 20

John wants to start saving for an apartment. On his 20th birthday, he starts depositing R500 per week into a bank account with an annual interest rate of 8%, compounded weekly. He will continue to make these weekly payments until the day of his 29th birthday. How much money will he have saved by then to finance the purchase of an apartment?

[1] R397 856,29

[2] R166 717,97

[3] R78 714,77

[4] R342 321,48

END OF ASSIGNMENT 02 OF SEMESTER 1

FOR SEMESTER 2 STUDENTS ONLY

ASSIGNMENT 01

Study material: Chapters $1, 2$ and 3 in the Study Guide

Unique assignment number: **783587**

FIXED DUE DATE: 17 August 2018

Important:

- This is a multiple-choice assignment that must be answered and submitted ONLINE using myUnisa. Go to **Assessment Info** on the BNU1501 module site and follow the steps.
- Always keep your detailed workings in a file so that you can compare your solutions to the ones that will be published on the module site on myUnisa after the due date. **Also, keep a copy of the options you have chosen, in case of a query.**
- The due date of this assignment is **fixed**. No extension can be granted because the solutions are posted on the BNU1501 module site shortly after the closing date.

Question 1

Round 129,3974 off to one decimal digit.

[1] 129,3

[2] 130,0

[3] 129,4

[4] 129,5

Question 2

Round 129,3974 off to two decimal digits.

[1] 129,40

[2] 129,39

[3] 129,30

[4] 129,49

Question 3

Round 129,3974 off to an integer.

[1] 130

[2] 129,4

[3] 120

[4] 129

Question 4

A chocolate costs half as much as an ice cream. Suppose the chocolate costs c rand. How much does the ice cream cost, in terms of c?

[1] $2x$ rand

[2] $2c$ rand

[3] $\frac{c}{2}$ rand

[4] $c + 2$ rand

Question 5

Refer to question 4 above.
Suppose Susan wants to buy both a chocolate and an ice cream for both herself and a friend. How much will they cost her?

[1] $(c + 2c)$ rand

[2] $2\left(c + \frac{c}{2}\right)$ rand

[3] $2c$ rand

[4] $(2c + 4c)$ rand

Question 6

Refer to questions 4 and 5 above.
How much change will Susan get if she pays with a 100 rand note for the chocolates and ice creams that she wants to buy for herself and her friend? (Assume the chocolates and ice creams cost less than R100.)

[1] $(100 - c - 2c)$ rand

[2] $(100 - 2c + 4c)$ rand

[3] $(100 - 2c - 4c)$ rand

[4] $(100 - c + 2c)$ rand

Question 7

A family wants to attend a concert. The admission fee is R50 for an adult and R20 for a child. Suppose the family consists of two parents and x children. How much will the outing cost the family, in terms of x ?

[1] $70x$ rand

[2] $(2 + x)\,70$ rand

[3] $120x$ rand

[4] $(100 + 20x)$ rand

Question 8

Stewart cycles at an average speed of 10 kilometres per hour. What is the minimum number of days that it will take him to travel 1 000 kilometres, if he cannot cycle for more than 8 hours per day?

[1] 12,5 days

[2] 100 days

[3] 150 days

[4] 80 days

Question 9

Suppose q loaves of bread cost c rand. Write an expression, in terms of q and c, for the amount that 5 loaves of bread will cost.

[1] $5qc$ rand

[2] $\frac{5c}{q}$ rand

[3] $\frac{5q}{c}$ rand

[4] $\frac{c}{5q}$ rand

Question 10

Simplify the following expression as far as possible:

$$ab + a^2b + 3b^2a + 2ba^2 + ba$$

[1] $8a^2b^2$

[2] $2ab + 6a^2b$

[3] $2ab + 3a^2b + 3ab^2$

[4] $2a^2b^2 + 3a^4b^2 + 3b^2a$

Question 11

Simplify the following expression as far as possible:

$$\sqrt{16a^{16}b^{36}}$$

[1] $8a^8b^{18}$

[2] $4a^4b^6$

[3] $8a^4b^6$

[4] $4a^8b^{18}$

Question 12

Simplify the following expression as far as possible:

$$6x^2 - y\,(9x + 2y) - 3(xy - y^2)$$

[1] $6x^2 - 12xy - y^2$

[2] $-12xy - 5y^2 + 6x^2$

[3] $6x^2 - 12xy + y^2$

[4] $-12xy + y^2 - 2y + 6x^2$

Question 13

Simplify the following expression as far as possible:

$$9x^3y^2 \div 3x^2y^3 \times \left(2xy^2\right)^3$$

[1] $18x^4y^5$

[2] $24x^4y^5$

[3] $18x^4y^4$

[4] $24x^5y^4$

Question 14

Write $3\frac{3}{7}$ as an improper fraction.

[1] $\frac{24}{7}$

[2] $\frac{9}{21}$

[3] $\frac{9}{7}$

[4] $\frac{6}{7}$

Question 15

Write $\frac{68}{7}$ as a mixed fraction.

[1] $7\frac{5}{9}$

[2] $9\frac{5}{7}$

[3] $9\frac{5}{9}$

[4] $7\frac{9}{5}$

Question 16

Determine the LCM (Lowest Common Multiple) of the following three numbers:

$$8, 14 \text{ and } 12$$

[1] 336

[2] 1 344

[3] 14

[4] 168

Question 17

Determine the LCM of the following three terms:

$$ab, a^3b^2 \text{ and } a^2b^3$$

[1] ab

[2] a^6b^6

[3] a^3b^3

[4] a^5b^5

Question 18

Determine the LCM of the following three terms:

$$4x^2y^2, 16x^2y^3 \text{ and } 14x^3y^2$$

[1] $224x^7y^7$

[2] $896x^2y^3$

[3] $112x^3y^3$

[4] $112xy$

Question 19

Simplify the following expression as far as possible without using a calculator:

$$\frac{2}{3} - \frac{1}{6} + \frac{3}{5}$$

[1] 2

[2] $-\frac{7}{15}$

[3] $1\frac{13}{30}$

[4] $1\frac{1}{10}$

Question 20

Simplify the following expression as far as possible without using a calculator:

$$\frac{3}{4} \div \frac{2}{9} \times \frac{1}{2}$$

[1] $6\frac{1}{4}$

[2] $\frac{1}{12}$

[3] $1\frac{11}{16}$

[4] $\frac{4}{27}$

Question 21

Simplify the following expression as far as possible without using a calculator:

$$\frac{5}{2} \div \frac{9}{8} - \frac{4}{3}$$

[1] -12

[2] $\frac{8}{9}$

[3] $1\frac{23}{48}$

[4] $3\frac{2}{13}$

Question 22

Simplify the following expression as far as possible without using a calculator:

$$\frac{2}{3b} + \frac{5}{4b}$$

[1] $\dfrac{1}{b}$

[2] $\dfrac{23}{12}$

[3] $\dfrac{1}{b^2}$

[4] $\dfrac{23}{12b}$

Question 23

Write $\frac{5}{7}$ as a decimal number, rounded to three decimal digits, without using a calculator.

[1] 0,714

[2] 5,700

[3] 0,715

[4] 1,400

Question 24

Write 0,125 as an ordinary fraction in its simplests form.

[1] $1\frac{1}{4}$

[2] $1\frac{2}{5}$

[3] $\frac{1}{8}$

[4] $\frac{1}{80}$

Question 25

Write $2\frac{3}{7}$ as a decimal number, rounded to three decimal digits, without using a calculator.

[1] 2,370

[2] 2,429

[3] 2,428

[4] 0,429

Question 26

Write 3,675 as an ordinary mixed fraction in its simplest form.

[1] $3\frac{27}{40}$

[2] $3\frac{5}{8}$

[3] $\frac{27}{40}$

[4] $3\frac{3}{4}$

Question 27

Simplify the following expression as far as possible:

$$3 \cdot 2^3 + 2^3 3^2$$

[1] 46 872

[2] 7 800

[3] 91

[4] 96

Question 28

I have 20 apples and 10 oranges in a basket. If I take 4 apples out of the basket, what is the ratio of the number of oranges to the number of apples in the basket?

[1] 8 : 5

[2] 1 : 2

[3] 5 : 8

[4] 10 : 3

Question 29

Three students, Phumelo, Ivan and John, painted a hall together. They are each paid the same rate per hour. Phumelo spent 4 hours on the job, Ivan 3 hours, and John 1 hour. They earned R2 000 in total for the job. How much should Ivan receive?

[1] R1 000

[2] R750

[3] R250

[4] R600

Question 30

The increasing block tariffs per month for residential water for the 2016/2017 financial year are given below:

Household water in kilolitres (kℓ)	Rand per kℓ
0-6 kℓ ($\pm$200 ℓ per day)	8,66
7-12 kℓ	12,36
13-18 kℓ	16,23
19-24 kℓ	18,78

These tariffs do not include VAT.
What is the water bill, excluding VAT, for a month in which a household uses 10 kℓ of water?

[1] R101,40

[2] R210,20

[3] R123,60

[4] R105,10

END OF ASSIGNMENT 01 OF SEMESTER 2

FOR SEMESTER 2 STUDENTS ONLY

ASSIGNMENT 02

Study material: Chapters 4, 5, 6 and 7 in the Study Guide

Unique assignment number: **651590**

FIXED DUE DATE: 17 September 2018

Important:

- This is a multiple-choice assignment that must be answered and submitted ONLINE using myUnisa. Go to **Assessment Info** on the BNU1501 module site and follow the steps.
- Always keep your detailed workings in a file so that you can compare your solutions to the ones that will be published on the module site on myUnisa after the due date. **Also, keep a copy of the options you have chosen, in case of a query.**
- The due date of this assignment is **fixed**. No extension can be granted because the solutions are posted on the BNU1501 module site shortly after the closing date.

Question 1

Consider the sketch below.
A rectangular piece of material with sides of 120 cm and 100 cm is used to make a circular (round) table cloth. The diameter of the completed cloth must be 0,9 m, and 5 cm has to be provided for the hem. How much material, in square metres, is wasted?

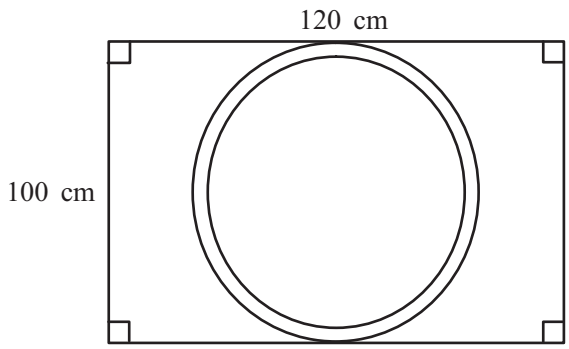

[1] 0,56 m^2

[2] 1,16 m^2

[3] 0,41 m^2

[4] 1,34 m^2

Question 2

Consider the sketch below.
A semicircle is drawn inside a triangle as indicated in the sketch. The side lengths of the triangle are 30 cm, 40 cm and 50 cm, respectively. Calculate the perimeter of the shaded part.

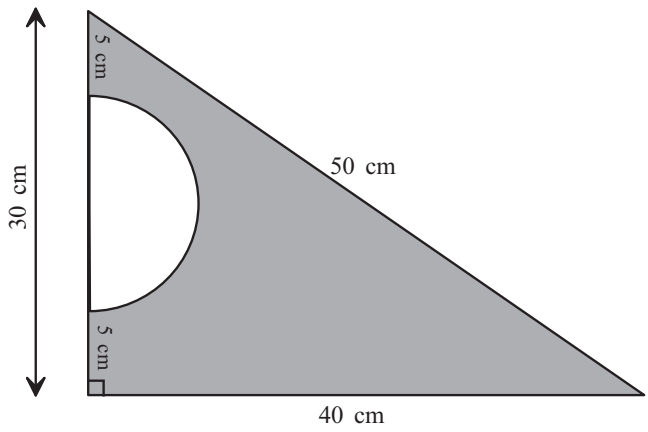

[1] 131,42 cm

[2] 442,92 cm

[3] 162,83 cm

[4] 147,12 cm

Question 3

Refer to the sketch in question 2 above. Calculate the area of the shaded part in the sketch.

[1] 442,9 cm^2

[2] 285,8 cm^2

[3] 1 042,9 cm^2

[4] 842,9 cm^2

Question 4

A circular glass fish tank is three quarters filled with water. The measurements of the fish tank are given in the sketch below. Suppose a solid rectangular glass block with a length and width of 30 cm and a height of 10 cm, is afterwards put in the centre of this fish tank. By how many centimetres will the water level in the tank rise? The answer, rounded to two decimal digits, is...

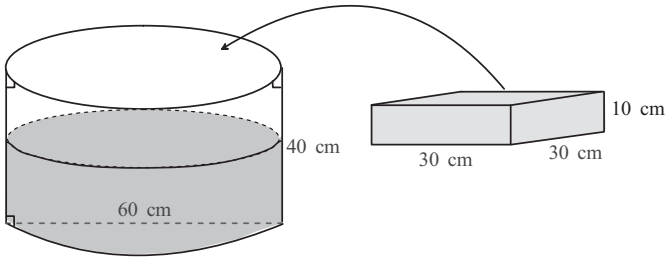

[1] 0,78 cm

[2] 3,18 cm

[3] 7,16 cm

[4] 1,59 cm

Question 5

Calculate the volume of the smallish container in the figure below. It is a rectangular box with a curved lid, that is a cylinder sliced down the middle. The measurements of the container are given in the sketch. The volume of the container is ...

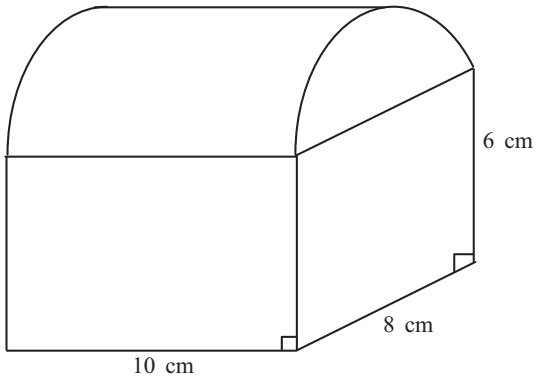

[1] 229 cm^3

[2] 631 cm^3

[3] 731 cm^3

[4] 983 cm^3

Question 6

Refer to the sketch in question 5 above.
Suppose you want to paint the outside of the lid of the container red. Fifty millilitres of the red paint will cover 10 cm^2. How many litres of red paint will you need to finish this painting job? (Hint: First calculate the area to be painted red.) The answer to one decimal digit, is ....

[1] 1,4 ℓ

[2] 0,2 ℓ

[3] 2,3 ℓ

[4] 0,9 ℓ

Question 7

Solve the following equation:

$$2\,(3a+1) = 7 - 4a$$

[1] $a = \frac{9}{10}$

[2] $a = \frac{3}{5}$

[3] $a = \frac{1}{2}$

[4] $a = \frac{9}{2}$

Question 8

Solve the following equation:

$$\frac{3x}{4} + 2\frac{1}{2} = 2x$$

[1] $x = 2$

[2] $x = \dfrac{1}{2}$

[3] $x = -10$

[4] $x = \dfrac{2}{5}$

Question 9

If $p = m^2 - \frac{x}{2}$, make x the subject of the formula.

[1] $x = \frac{m^2}{2} - \frac{p^2}{2}$

[2] $x = 2m^2 - 2p$

[3] $x = 2m - 2\sqrt{p}$

[4] $x = 2p - 2m^2$

Question 10

If $V = \pi r^2 h$, make h the subject of the formula.

[1] $h = V - \pi r^2$

[2] $h = V \pi r^2$

[3] $h = \dfrac{V}{2\pi r}$

[4] $h = \dfrac{V}{r^2 \pi}$

Question 11

The straight line passing through points (3; 2) and (0; 5) is ...

[1] an ascending line.

[2] a descending line.

[3] a vertical line.

[4] a horizontal line.

Question 12

Determine how many years it will take for R24 000 to grow to R36 000 if it is invested at an annual simple interest rate of 12,5%.

[1] 3,4 years

[2] 2,7 years

[3] 4 years

[4] 6,25 years

Question 13

Determine what the annual interest rate was if the simple interest earned on an investment of R150 000 was R25 000. The R150 000 was invested for three and a half years. The answer, rounded to the first decimal digit is ...

[1] 0,5%

[2] 4,8%

[3] 4,4%

[4] 1,43%

Question 14

How long will it take for an investment to double in value if the annual interest rate is 10% and interest is compounded **every 6 months**? The answer, correct to one decimal digit, is ...

[1] 14,2 years

[2] 21,0 years

[3] 2,3 years

[4] 7,1 years

Question 15

What should the annual interest rate, compounded daily, be for an investment of R8 000 to earn R3 000 interest in three years' time?

[1] 12,5%

[2] 32,7%

[3] 10,6%

[4] 11,2%

Question 16

Malibongwe wants to start saving to be able to buy a car in 5 years' time. He wants to save by depositing weekly payments of R1 250 into a savings account that offers an annual interest rate of 24%, compounded weekly. How much will Malibongwe have available for a car, in 5 years' time?

[1] R625 885,97

[2] R189 034,39

[3] R325 000

[4] R75 987

Question 17

Brenda secured a 20-year loan of R400 000. She repays the loan in equal monthly payments. The annual interest rate is 16%, compounded monthly. What is Brenda's minimum monthly payment?

[1] R231,69

[2] R5 565,02

[3] R1 666,67

[4] R5 622,23

Question 18

Consider the amortisation of Brenda's loan in question 17 above. What will the outstanding balance be after all the minimum payments have been made for 15 years? Assume the interest rate stayed fixed for the whole period.

[1] R228 843,24

[2] R375 000,00

[3] R0,00

[4] R396 180,76

Question 19

Consider the amortisation of Brenda's loan in question 17 above. Suppose Brenda can only afford to make the minimum monthly payments into this loan account. After how many years, to the nearest month, will the Principal which is paid off in a month, for the first time be more than the interest paid off per month?

[1] 10 years and 1 month

[2] 15 years and 2 months

[3] 15 years and 8 months

[4] 20 years

Question 20

Refer to Brenda's loan in question 17 above.
Suppose Brenda decides from the start to pay R6 000 per month into this loan account . In how many years will she pay off the loan?

[1] 41,5 years

[2] 13,8 years

[3] 165,9 years

[4] 5,6 years

END OF ASSIGNMENT 02 OF SEMESTER 2

END OF TUTORIAL LETTER