THE WEST AFRICAN EXAMINATIONS COUNCIL
WASSCE FOR SCHOOL CANDIDATES, 2022
FINAL MARKING SCHEME
FURTHER MATHEMATICS / MATHEMATICS (ELECTIVE) 2 (ESSAY)

GENERAL INSTRUCTIONS

1. Marks are subdivided into method **(M)** marks, accuracy **(A)** and independent accuracy marks not preceded by **M** mark **(B).**

2. 'The **M** marks should be given for a particular stage if the method is correct; that is, it would, if correctly carried out without numerical error, yield the right answer. **M** marks are not subdivided and unless the **M** marks for a stage have been awarded, no **A** marks can be gained for that stage.

3. Give **0** for results obtained for work that is indecipherable or wholly suppressed (W.S.O).

4. Deduct **1** mark for omission of units or for wrong units but this should not be more than once in the whole paper.

5. **12** questions must be answered in all. **All** the questions in Section A and **4** Questions in Section B with **at least 1** Question from each part.

6. If a question is attempted more than once, **mark all** and record the marks for that which has gained the **highest marks**.

7. If more questions are attempted than the rubric allows, delete the marks for those extra questions which have gained the **lowest marks** and ignore the remaining questions in that part by writing **'MQA'** through. (**'MQA'** denotes 'More Question Answered' than the rubric allows).

8. Unless otherwise stated, equivalent methods not specified in the Marking Scheme should be accepted and given appropriate marks.

9. The **final total marks** according to the Marking Scheme is**100**.

10. The final total (and not the question total) should be rounded upwards to the nearest whole number.

HOUSE OF GENUINE QUESTIONS ON TELEGRAM

WASSCE FOR SCHOOL CANDIDATES, 2022
FURTHER MATHEMATICS / MATHEMATICS (ELECTIVE) 2 (ESSAY)
GHANA

Question Number	Details	Marks
1.	$3^x + 243(3^{-x}) - 36 = 0$ $y + \frac{243}{y} - 36 = 0$ $y^2 + 243 - 36y = 0$ $y^2 - 36y + 243 = 0$ $(y - 27)(y - 9) = 0$ $y = 27$ or 9 $3^x = 27$ or $3^x = 9$ $3^x = 3^3$ or $3^x = 3^2$ $x = 3$ or 2	M1 for substituting A1 for $y^2 - 36y + 243 = 0$ M1 for solving for y A1 for $y = 27$ or 9 $(-\frac{1}{2}ee)$ M1 for solving for x A1 for $x = 3$ or 2 $(-\frac{1}{2}ee)$ [6 Marks]
2.(a)	$p\nabla q = \frac{p^2 - q^2}{4}$ $2\nabla\frac{3}{5} = \frac{4-\frac{9}{25}}{4}$ $= \frac{100-9}{100}$ $= \frac{91}{100}$	M1 for substituting M1 for simplifying A1 for $\frac{91}{100}$ Accept decimals
(b)	$x\nabla 6 = 3\frac{1}{4}$ $\frac{x^2 - 36}{4} = \frac{13}{4}$ $x^2 - 36 = 13$ $x^2 = 49$ $x = \pm 7$	M1 for substituting M1 for solving A1 for $x = \pm 7$ $(-\frac{1}{2}ee)$ [6 Marks]

HOUSE OF GENUINE QUESTIONS ON TELEGRAM

Question Number	Details	Marks
3.	$\frac{2\tan 15°}{1+\tan^2 15°} = \frac{1}{2}$	B1 for $\frac{1}{2}$
	$4\tan 15° = 1+\tan^2 15°$	M1 for cross multiplying
	$\tan^2 15° - 4\tan 15° + 1 = 0$	A1 for $\tan^2 15° - 4\tan 15° + 1 = 0$
	Let $x = \tan 15°$	
	$x^2 - 4x + 1 = 0$	
	$x = \frac{4 \pm \sqrt{16-4}}{2}$	M1 for solving
	$= 2 \pm \sqrt{3}$	A1 for $2 \pm \sqrt{3}$
	$\tan 15° = 2 - \sqrt{3}$	A1 for $\tan 15° = 2 - \sqrt{3}$ [6 Marks]
4.(a)	$f(x) = \frac{x+m}{x-3}, \quad f(5) = \frac{3}{2}$	
	$\frac{5+m}{5-3} = \frac{3}{2}$	
	$10 + 2m = 6$	M1 for simplifying
	$2m = -4$	
	$m = -2$	A1 for $m = -2$
(b)	$f(x) = \frac{x-2}{x-3}, x \neq 3$	
	Let $y = \frac{x-2}{x-3}$	
	$x = \frac{y-2}{y-3}$	M1 for substituting
	$xy - 3x = y - 2$	
	$xy - y = 3x - 2$	
	$y(x-1) = 3x - 2$	M1 for simplifying
	$y = \frac{3x-2}{x-1}$	
	$f^{-1}(x) = \frac{3x-2}{x-1}, x \neq 1$	A1 for $f^{-1}(x) = \frac{3x-2}{x-1}, x \neq 1$
(c)	$x = 1$ makes $f^{-1}(x)$ undefined	B1 for $x = 1$ *makes* $f^{-1}(x)$ undefined [6 Marks]

HOUSE OF GENUINE QUESTIONS ON TELEGRAM

Question Number	Details	Marks
5.(a)		

Marks	*Frequency*	*Class Boundaries*
10 – 14	4	9.5 – 14.5
15 – 19	5	14.5 – 19.5
20 – 24	6	19.5 – 24.5
25 – 29	12	24.5 – 29.5
30 – 34	10	29.5 – 34.5
35 – 39	8	34.5 – 39.5
40 – 44	3	39.5 -- 44.5
45 – 49	2	44.5 – 49.5

See the attached graph

B4 for graph $(-\frac{1}{2}\ ee)$

(b) Mode = 28.25 ± 0.25

M1 for reading

A1 for Mode = 28.25 ± 0.25

[6 Marks]

No break (-1)

zero not there $(-\frac{1}{2})$

WHATSAPP CHANNEL +233208572415

WASSCE FOR SCHOOL CANDIDATES, 2022
FURTHER MATHEMATICS / MATHEMATICS (ELECTIVE) 2 (ESSAY)
GHANA

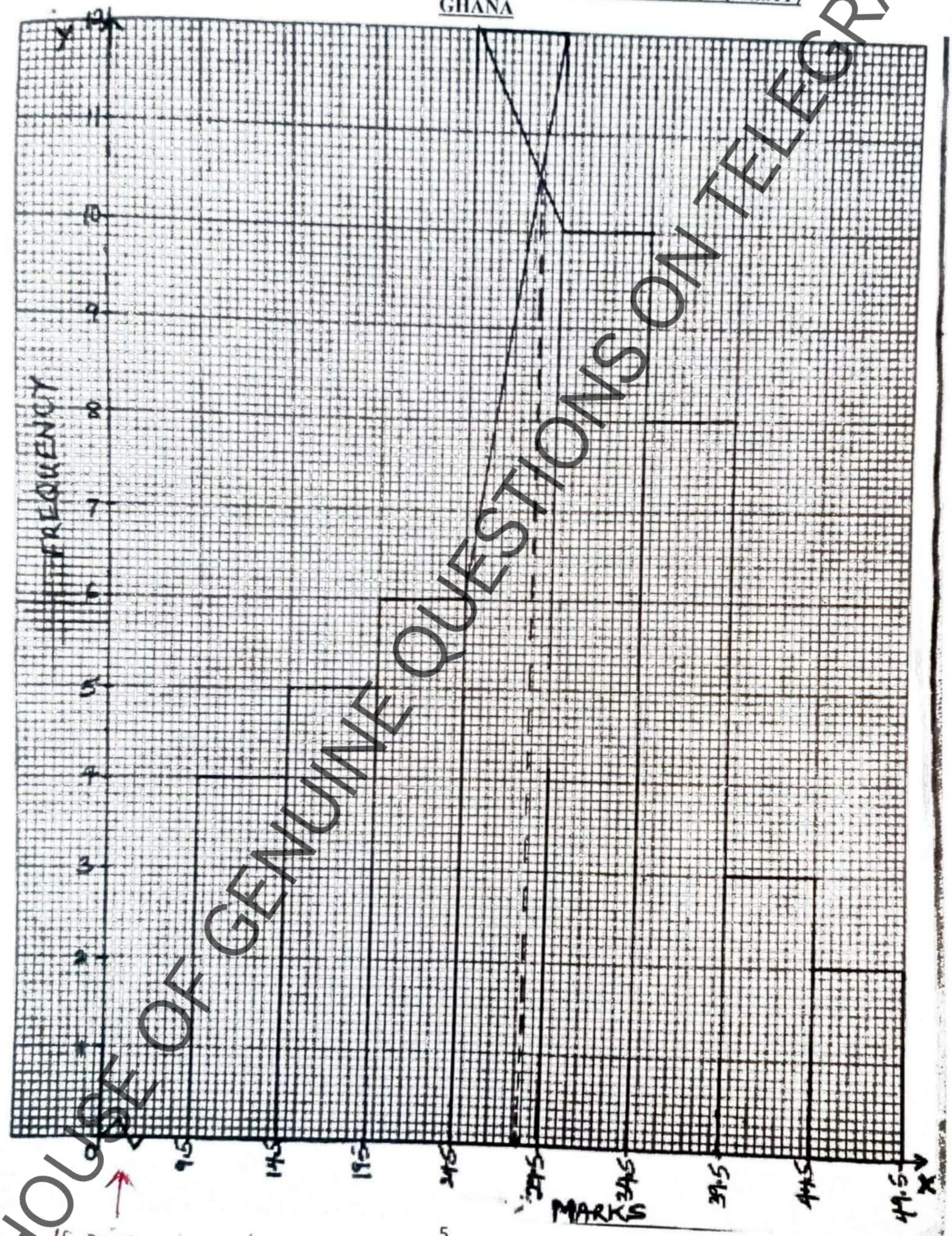

HOUSE OF GENUINE QUESTIONS ON TELEGRAM

WASSCE FOR SCHOOL CANDIDATES, 2022
FURTHER MATHEMATICS / MATHEMATICS (ELECTIVE) 2 (ESSAY)
GHANA

Question Number	Details	Marks
6.(a)	$P(A \cap B) = P(A) \times P(B)$ $= m(m + \frac{1}{5})$ $\frac{3}{20} = m^2 + \frac{m}{5}$ $3 = 20m^2 + 4m$ $20m^2 + 4m - 3 = 0$ $20m^2 + 10m - 6m - 3 = 0$ $(10m - 3)(2m + 1) = 0$ $m = \frac{3}{10}, m = -\frac{1}{2}$ But m cannot be negative $\therefore m = \frac{3}{10}$ or 0.3	M1 for substituting and simplifying A1 for $20m^2 + 4m - 3 = 0$ M1 for solving A1 for $m = \frac{3}{10}$ or 0.3
(b)	$P(A \cup B) = P(A) + P(B) - P(A \cap B)$ $= \frac{3}{10} + \left(\frac{3}{10} + \frac{1}{5}\right) - \frac{3}{20}$ $= \frac{13}{20}$ or 0.65	M1 for substituting A1 for $\frac{13}{20}$ or 0.65 [6 Marks]
7.(a)	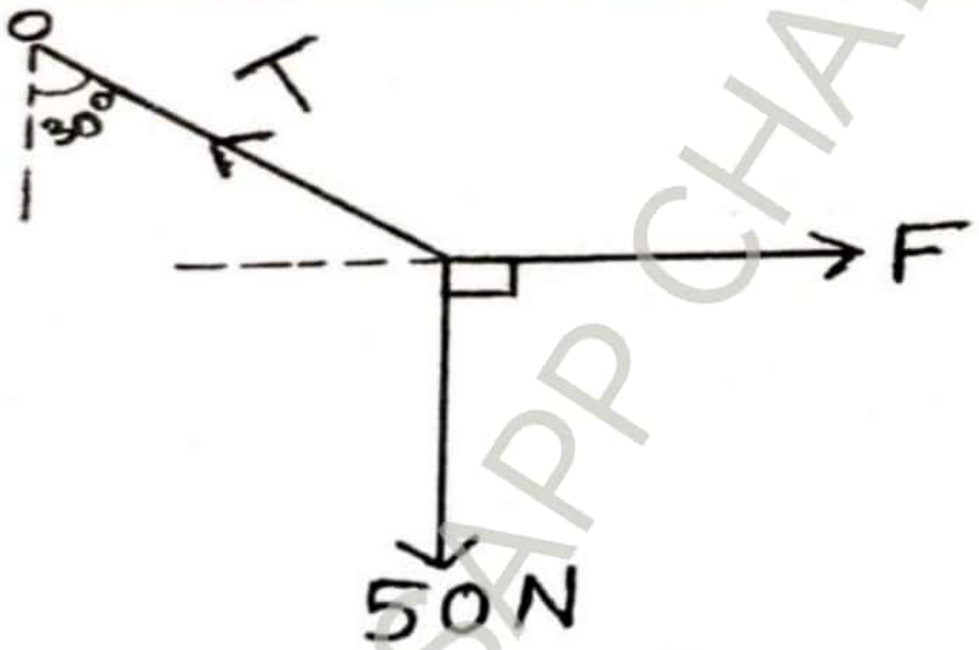 $\frac{F}{sin150°} = \frac{T}{\sin 90°} = \frac{50}{sin120°}$ $\frac{T}{\sin 90°} = \frac{50}{sin120°}$ $T = \frac{50}{0.8660}$ $= 57.7\ N$	B1 for diagram $(-\frac{1}{2}ee)$ M1 for finding T M1 for solving A1 for $T = 57.7\ N$
(b)	$\frac{F}{sin150°} = \frac{50}{sin120°}$ $F = \frac{50sin150°}{sin120°}$ $= \frac{25}{0.8660}$ $= 28.9N$	M1 for finding F A1 for $F = 28.9\ N$ [6 Marks]

WHATSAPP CHAT +233208571241

Question Number	Details	Marks
7.(a)	**ALITER** 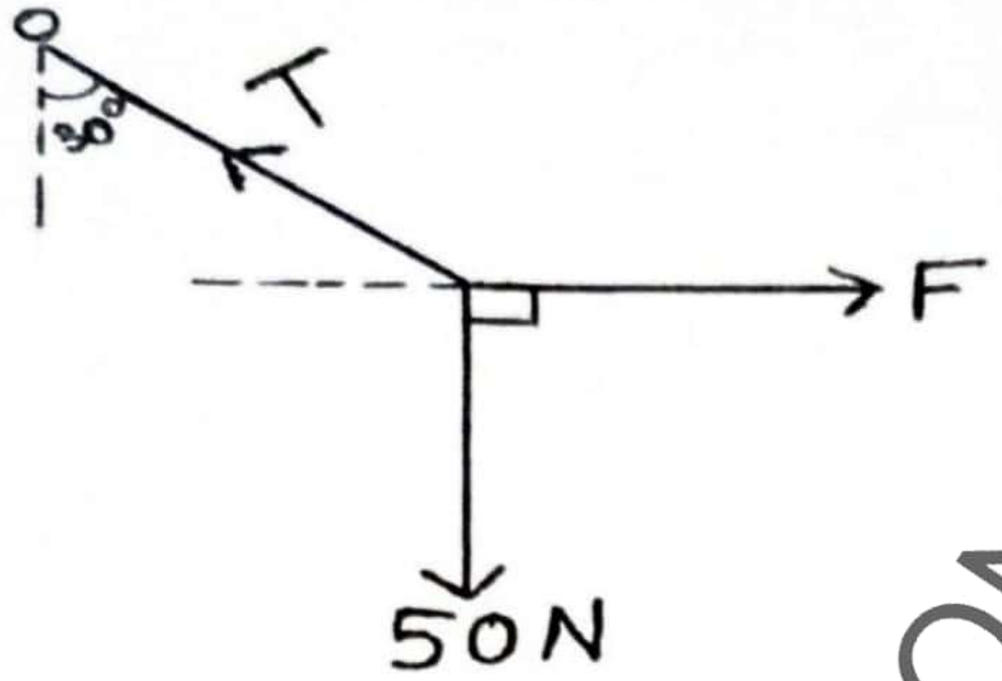	No explanation / diagram B1 / wrong explanation B0 B1 for diagram $(-\frac{1}{2}ee)$
	$\begin{pmatrix} T\ sin330° \\ T\ cos330° \end{pmatrix} + \begin{pmatrix} F\ sin90° \\ F\ cos90° \end{pmatrix} + \begin{pmatrix} 50\ sin180° \\ 50\cos 180° \end{pmatrix} = \begin{pmatrix} 0 \\ 0 \end{pmatrix}$	M1 for forming equation
	$\begin{pmatrix} -0.5T \\ 0.866T \end{pmatrix} + \begin{pmatrix} F \\ 0 \end{pmatrix} + \begin{pmatrix} 0 \\ -50 \end{pmatrix} = \begin{pmatrix} 0 \\ 0 \end{pmatrix}$	
	$\begin{pmatrix} -0.5T + F \\ 0.866T - 50 \end{pmatrix} = \begin{pmatrix} 0 \\ 0 \end{pmatrix}$	M1 for solving for T
	$-0.5T + F = 0$	
	$0.866T = 50$	
	$T = \frac{50}{0.866}$	
	$= 57.7\ N$	A1 for $T = 57.7\ N$
(b)	$0.5\,T = F$	
	$F = 0.5\,T$	M1 for finding F
	$= 0.5 \times 57.7367$	
	$F = 28.8684\ N$	A1 for $F = 28.9\ N$
	$= 28.9\ N$	[6 Marks]

HOUSE OF QUESTIONS ONTELEGRAM - GENUINE QUESTIONS

Question Number	Details	Marks
8.	Let θ be the angle between $\overrightarrow{SP}$ and $\overrightarrow{SQ}$	
	$\overrightarrow{SP} = (-2i + 3j) - (3i)$	
	$= -5i + 3j$	B1 for $-5i + 3j$
	$\overrightarrow{SQ} = (3i + 4j) - (3i)$	
	$= 4j$	B1 for $4j$
	$\overrightarrow{SP} \cdot \overrightarrow{SQ} = (-5i + 3j) \cdot (4j)$	
	$= 12$	B1 for 12
	$\lvert\overrightarrow{SP}\rvert = \sqrt{(-5)^2 + 3^2}$	
	$= \sqrt{34}$	
	$\lvert\overrightarrow{SQ}\rvert = 4$	B1 for $\sqrt{34}$ or 4
	$4\sqrt{34}\cos\theta = 12$	
	$\theta = \cos^{-1}\left(\frac{12}{4\sqrt{34}}\right)$	M1 for solving for θ
	$= 59.04°$	
	$= 59°$	A1 for $\theta = 59°$
		[6 Marks]
9.(a)	$ar = a + 7d$	
	$a^2 = a + 7a$	M1 for substituting
	$a^2 - 8a = 0$	
	$a(a - 8) = 0$	M1 for solving
	$a = 0$ or $a = 8$	
	$a = 8$	A1 for $a = 8$
	$S_5 = \frac{8(8^5-1)}{8-1}$	M1 for substituting
	$= \frac{8\times32767}{7}$	M1 for simplifying
	$= 37,448$	A1 for 37,448

TELEGRAM
QUESTIONS ONLY
OF GENUINE
HOUSE

Exploring ICT Usage amo

WASSCE FOR SCHOOL CANDIDATES, 2022
FURTHER MATHEMATICS / MATHEMATICS (ELECTIVE) 2 (ESSAY)
GHANA

Question Number	Details	Marks
9. (b)(i)	$S_n = \frac{n}{2}\{2a + (n-1)d\}$	
	$165 = \frac{11}{2}\{2a + 10d\}$	M1 for substituting
	$30 = 2a + 10d$	M1 for simplifying A1 for $30 = 2a + 10d$
	$9 = a + 2d$	B1 for $9 = a + 2d$
	$18 = 2a + 4d$	
	$12 = 6d$	M1 for solving for d or a
	$d = 2$	A1 for $d = 2$
(ii)	$9 = a + 2d$	
	$9 = a + 2 \times 2$	
	$a = 9 - 4$	
	$a = 5$	A1 for $a = 5$
		[13 Marks]

WHATSAPP CHAT +233208572419

Question Number	Details	Marks
10.(a)	$\left(\frac{1}{2}-x\right)^6 = \binom{6}{6}\left(\frac{1}{2}\right)^6 + \binom{6}{5}\left(\frac{1}{2}\right)^5(-x) + \binom{6}{4}\left(\frac{1}{2}\right)^4(-x)^2 + \binom{6}{3}\left(\frac{1}{2}\right)^3(-x)^3 + \binom{6}{2}\left(\frac{1}{2}\right)^2(-x)^4 + \binom{6}{1}\left(\frac{1}{2}\right)(-x)^5 + \binom{6}{0}(-x)^6$	M1 for expansion At least 2 terms
	$= \frac{1}{64} - \frac{3x}{16} + \frac{15x^2}{16} - \frac{5x^3}{2} + \frac{15x^4}{4} - 3x^5 + x^6$	A3 for correct expansion $(-\frac{1}{2}\ ee)$
(b)(i)	$(1+qx)\left(\frac{1}{2}-x\right)^6 = (1+qx)\times$ $\left(\frac{1}{64} - \frac{3x}{16} + \frac{15x^2}{16} - \frac{5x^3}{2} + \frac{15x^4}{4} - 3x^5 + x^6\right)$ $= \frac{15x^2}{16} - \frac{3qx^2}{16} + \ldots .$ $\frac{15}{16} - \frac{3q}{16} = 0$ $15 = 3q$ $q = 5$	M1 for expanding and equating coefficient to zero M1 for solving A1 for $q = 5$
(b)(ii)	$(0.45)^6 = (0.5 - 0.05)^6$ $\therefore x = 0.05$	B1 for 0.05
	$(0.45)^6 = \frac{1}{64} - \frac{3(0.05)}{16} + \frac{15(0.05)^2}{16} - \frac{5(0.05)^3}{2} + \frac{15(0.05)^4}{4} - 3(0.05)^5 + (0.05)^6$ $= 0.015625 - 0.009375 + 0.00234375 - 0.0003125 + 0.0000234375 - 0.0000009375 + 0.000000015625$ $= 0.00830377$ $= 0.008304$	M1 for substituting (2 terms correct A1 for correct substitution $(-\frac{1}{2}ee)$ up to 5 terms accept A1 M1 for simplifying A1 for 0.00830377 A1 for 0.008304
		[13 Marks]

WHATSAPP CHAT +233208574125

WASSCE FOR SCHOOL CANDIDATES, 2022
FURTHER MATHEMATICS / MATHEMATICS (ELECTIVE) 2 (ESSAY)
GHANA

Question Number	Details	Marks
11(a)	$V = \frac{4}{3}\pi r^3$	
	$\frac{dV}{dr} = 4\pi r^2$	M1 for finding $\frac{dV}{dr}$ A1 for $4\pi r^2$
	$8cm^3s^{-1} = 4\pi r^2 \cdot \frac{dr}{dt}$	
	$\frac{dr}{dt} = \frac{8cm^3s^{-1}}{4\pi \times 16}$	M1 for substituting
	$\frac{dr}{dt} = \frac{1}{8\pi} cms^{-1}$	A1 for $\frac{1}{8\pi} cms^{-1}$
	$A = 4\pi r^2$	
	$\frac{dA}{dr} = 8\pi r$	
	$\frac{dA}{dt} = \frac{dA}{dr} \cdot \frac{dr}{dt}$	
	$\frac{dA}{dt} = 8\pi r \times \frac{1}{8\pi} cms^{-1}$	M1 for finding $\frac{dA}{dt}$
	$\frac{dA}{dt} = 8\pi \times 4cm \times \frac{1}{8\pi} cms^{-1}$	M1 for substituting for r
	$\frac{dA}{dt} = 4\ cm^2s^{-1}$	A1 for $4\ cm^2s^{-1}$
(b)	$3x^2 - 4xy + 3y^2 = 15$	
	$6x - 4y - 4x\frac{dy}{dx} + 6y\frac{dy}{dx} = 0$	M1 for differentiating (At least 2 terms correct ~~Any two~~) A1 for correct differentiating
	$\frac{dy}{dx}(6y - 4x) = 4y - 6x$	M1 for finding $\frac{dy}{dx}$
	$\frac{dy}{dx} = \frac{4y-6x}{6y-4x}$	A1 for $\frac{4y-6x}{6y-4x}$
	$\frac{dy}{dx}_{(2,\ 3)} = \frac{12-12}{18-8}$	M1 for substituting and simplifying
	$= 0$	A1 for 0
		[13 Marks]

WHATSAPP CHAT +233208

Question Number	Details	Marks
12.(a)	See the graph attached	B2 for graph ($-\frac{1}{2}e\theta$)
(b)	$\bar{x} = \frac{698}{9}$ $= 77.56$ $\bar{y} = \frac{649}{9}$ $= 72.11$ Plotting $(\bar{x}, \bar{y})$	M1 for finding $\bar{x}$ or $\bar{y}$ A1 for $\bar{x} = 77.56$ A1 for $\bar{y} = 72.11$ B1 for plotting $(\bar{x}, \bar{y})$
(c)	See the line of best fit on the graph	B1 for line of best fit
(d)	Gradient $= \frac{79-44}{89-30}$ $= \frac{35}{59}$ or 0.59 ± 0.1 $y - 72 = \frac{35}{59}(x - 78)$ $59y - 4248 = 35x - 2730$ $59y - 35x - 1518 = 0$	M1 for finding gradient A1 for gradient M1 for forming equation A1 for equation
(e)	At $x = 92, y = 80.3 \pm 1.0$	M1 for reading or calculating A1 for $y = 80.3 \pm 1.0$

[13 Marks]

TELEGRAM
HOUSE OF QUESTIONS ON GENUINE QU

WASSCE FOR SCHOOL CANDIDATES, 2022

FURTHER MATHEMATICS / MATHEMATICS (ELECTIVE) 2 (ESSAY)

GHANA

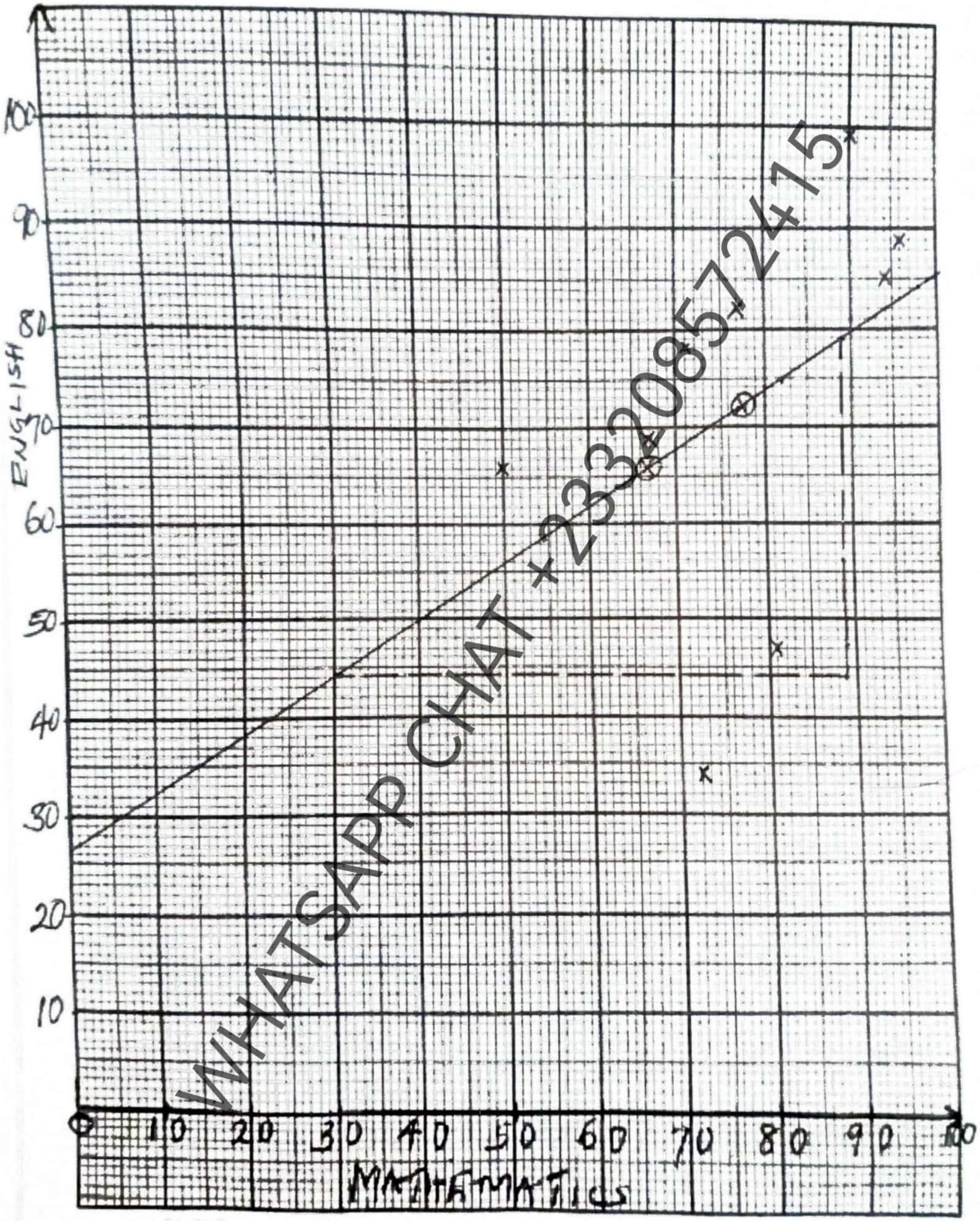

Not starting from origin, B = 0

HOUSE OF GENUINE QUESTIONS ON TELEGRAM

WASSCE FOR SCHOOL CANDIDATES, 2022
FURTHER MATHEMATICS / MATHEMATICS (ELECTIVE) 2 (ESSAY)
GHANA

Question Number	Details	Marks
13.(a)	$P(equal\ doctors\ and\ nurses) = \frac{\binom{5}{3}\binom{10}{3}}{\binom{15}{6}}$ $= \frac{1200}{5005}$ $= 0.239760$ $= 0.24$	M1 for forming combination M1 for simplifying A1 for 0.24
(b)	$P(at\ most\ 2\ nurses) = \frac{\binom{10}{2}\binom{5}{4}}{\binom{15}{6}} + \frac{\binom{10}{1}\binom{5}{5}}{\binom{15}{6}}$ $= \frac{225}{5005} + \frac{10}{5005}$ $= 0.046953$ $= 0.05$	M1 for forming combination A1 for correct combination$(-\frac{1}{2}ee)$ M1 for simplifying A1 for 0.04695 (Accept 0.047) A1 for 0.05
(c)	$P(more\ doctors\ than\ nurses) = \frac{\binom{5}{5}\binom{10}{1}}{\binom{15}{6}} + \frac{\binom{5}{4}\binom{10}{2}}{\binom{15}{6}}$ $= \frac{10}{5005} + \frac{225}{5005}$ $= 0.046953$ $= 0.05$	M1 for forming combination A1 for correct combination $(-\frac{1}{2}ee)$ M1 for simplifying A1 for 0.04695 (Accept 0.047) A1 for 0.05
		[13 Marks]

Question Number	Details	Marks
14. (a)	$\overrightarrow{WX} = \begin{pmatrix}-1\\3\end{pmatrix} - \begin{pmatrix}3\\-2\end{pmatrix}$	
	$= \begin{pmatrix}-4\\5\end{pmatrix}$	B1 for $\begin{pmatrix}-4\\5\end{pmatrix}$
	$\lvert\overrightarrow{WX}\rvert = \sqrt{(-4)^2 + 5^2}$	
	$= \sqrt{16+25}$	
	$= \sqrt{41}$	B1 for $\sqrt{41}$
	Unit vector of $\overrightarrow{WX} = \frac{1}{\sqrt{41}}(-4i+5j)$	M1 for finding unit vector
	$= \frac{\sqrt{41}}{41}(-4i+5j)$	A1 for $\frac{\sqrt{41}}{41}(-4i+5j)$ Rationalize
(b)	$\overrightarrow{OW} \cdot \overrightarrow{OY} = 0$	
	$\begin{pmatrix}3\\-2\end{pmatrix} \cdot \begin{pmatrix}4\\n\end{pmatrix} = 0$	M1 for finding n
	$12 - 2n = 0$	
	$n = 6$	A1 for $n = 6$
(c)	$\overrightarrow{WZ} = \begin{pmatrix}m\\-1\end{pmatrix} - \begin{pmatrix}3\\-2\end{pmatrix}$	M1 for subtracting
	$= \begin{pmatrix}m-3\\1\end{pmatrix}$	A1 for $\begin{pmatrix}m-3\\1\end{pmatrix}$
	$\sqrt{37} = \sqrt{(m-3)^2 + 1^2}$	
	$37 = (m-3)^2 + 1^2$	M1 for substituting
	$36 = (m-3)^2$	M1 for simplifying
	$m - 3 = \pm 6$	A1 for quadratic equation
	$m = 3 - 6$ or $m = 3 + 6$	M1 for solving
	$m = -3$ or 9	A1 for $m = -3$ or 9 $(-\frac{1}{2}ee)$
		[13 marks]

Question Number	Details	Marks
15(a)	Using $v^2 = u^2 + 2aS$ $0 = 625 - 20S$ $20s = 625$ $S = \frac{625}{20} = 31.25\ m$	M1 for substituting M1 for solving A1 for $31.25\ m$
	New height $= (31.25 + 58)m$ $= 89.25\ m$	M1 for adding A1 for $89.25\ m$
(b)(i)	$m_1u_1 - m_2u_2 = (m_1 + m_2)v$ $8\begin{pmatrix}5\\4\end{pmatrix} - 4\begin{pmatrix}1\\14\end{pmatrix} = (8+4)v$ $\begin{pmatrix}40\\32\end{pmatrix} - \begin{pmatrix}4\\56\end{pmatrix} = 12v$ $\frac{1}{12}\begin{pmatrix}36\\-24\end{pmatrix} = v$ $v = \begin{pmatrix}3\\-2\end{pmatrix}$ $\lvert v\rvert = \sqrt{3^2 + (-2)^2}$ $= \sqrt{13}$ $= 3.6\ ms^{-1}$	M1 for substituting M1 for solving A1 for $v = \begin{pmatrix}3\\-2\end{pmatrix}$ M1 for finding magnitude A1 for $3.6\ ms^{-1}$
	$tan\theta = \frac{2}{3}$ $\theta = tan^{-1}\left(\frac{2}{3}\right)$ $= 33.67°$	M1 for finding θ A1 for $33.67°$
(ii)	Direction of the final velocity $= 90 + 33.67$ $= 123.67°$ $= 124°$	A1 for $124°$
		[13 Marks]

GHANA 06/10/2022

NIGERIA 06/10/2022

HOUSE OF GENUINE QUESTIONS ON TELEGRAM