UNIT 4: MATHEMATICS OF FINANCE

CONTENTS

4.0 Aims and Objectives
4.1 Introduction
4.2 Interests
    4.2.1 Simple Interest
    4.2.2 Compound Interest
4.3 Effective Rate
4.4 Annuities
    4.4.1 Ordinary Annuity
    4.4.2 Sinking of Fund
    4.4.3 Amortization
    4.4.4 Mortgage
4.5 Exercise/Problems
4.6 Solution to the Exercise / Problem

4.0 AIMS AND OBJECTIVES

After studying this unit, you should be able to:

- tell how simple interest differ from compound interest;
- use annuity formula to solve business and economics problems which involve finance;
- analyze and solve mortgage problems;
- analyze future and present value of money (sum of money and/or an annuity) and
- Solve sinking fund and amortization problems.

4.1 INTRODUCTION

The basic concept of mathematics of finance is that money has time value which is described either as present value or future. **Present**

value is the value of money today; **future value** is the value of money at some point in the future. The different between money now and the same money in the future is called interest. Interest have a wide spread influence over decisions made by businesses and every of us in our personal lives. Therefore, the basic objective of this unit is to discuss interest rates and their effects on the value of money. Specifically, it covers simple interest, compound interest, annuity and mortgage problems.

4.2 INTERESTS

Interest is the price paid for the use of a sum of money over a period of time. It is a fee paid for the use of another's money, just rent is paid for the use of another's house. A savings institution (Banks) pay interest to depositors on the money in the savings account since the institutions have use of those funds while they are on deposit. On the other hand, a borrower pays interest to a lending agent (bank or individual) for use of the agent's fund over the term of the loan.

Interest is usually computed as percentage of the principal over a given period of time. This is called **interest rate**. Interest rate specifies the rate at which interest accumulates per year through out the term of the loan. The original sum of money that is lent or invested/ borrowed is called the **principal.**

Interests are of two types: simple interest and compound interest. In the first part of this unit we shall explore these two concepts.

4.2.1 Simple Interest

If interest is paid on the initial amount of money invested or borrowed only and not on subsequently accrued interest, it is called **simple interest**. The sum of the original amount (principal) and the total interest is the **future amount or maturity value or in short amount**.

Simple interest generally used only on short-term loans or investments – offen of duration less than one year. Simple interest is given by the following formula.

$$\boxed{I = prt} \quad \text{..... ----------(1)}$$

Where: I = Simple interest

P = principal amount

r = Annual simple interest rat

t = time in years, for which the interest is paid

If any three of the four variables are given, you can solve for the fourth (unknown variable) and their relationship is as follows:

Amount (A) = P + I

= P + Prt. factor out the common term P

= P (1 + rt) .....(2)

P = I/rt or P = $\frac{A}{1+rt}$.....(3)

r = I/pt.....(4)

t = I/pr .....(5)

Example 1

Ato Kassahun wanted to buy TV which costs Br. 10, 000. He was short of cash and went to Commercial Bank of Ethiopia (CBE) and borrowed the required sum of money for 9 months at an annual interest rate of 6%. Find the total simple interest and the maturity value of the loan.

Solution:

p = Br. 10,000

t** = 9 months = 9/12 = ¾ year

r = 6% per year = 0.06

I = ? A = ?

Interest (I) = Prt

A = P + I

= P (1 + rt)

= 10, 000 (1 + 0.06 x ¾)

= 10, 000 x 1.045

= Br. 10, 450

= 10, 000 x 0.06 x ¾

= Br. 450

The total amount which will have to be repaid to CBE at the end of the 9th month is Br. 10, 450 (the original borrowed amount plus Br. 450 Interest).

** **Note:** It is essential that the time period t and r be consistent with each other. That is if r is expressed as a percentage per year, t also should be expressed in number of years (number of months divided by 12 if time is given as a number of months). If time is given as a number of days, then t = $\frac{No\ of\ day}{360\ days}$. This approach is known as **ordinary interest year** method which uses a 360 day years, whereas if we use 365 days years the approach is called **exact time method**.

Example 2

How long will it take if Br. 10, 000 is invested at 5% simple interest to double in value?

Solution

Given: p = Br.10, 000

r = 10% = 0.10

A = Br.20, 000 (2 x 10, 000)

t = ?

I = prt

Divide both sides of the equation by pr and solve for t.

t

$= \frac{10,000}{10,000(0.10)}$

= 10 Years

I* = Amount (A) – principal (p)

= 20, 000 – 10, 000

= 10,000

Therefore it will take 20 years for the principal (Br. 10, 000) to double itself in value if it is invested at 10% annual interest rate.

Example 3

How much money you have to deposit in an account today at 3% simple interest rate if you are to receive Br. 5, 000 as an amount in 10 years?

Solution

A = Br. 5, 000

t = 10 Years

$$P = \frac{A}{1+rt}$$

$$= \frac{5{,}000}{1+(0.03\times 10)}$$

= Br. <u>3, 846.15</u>

In order to have Br. 5, 000 at the end of the 10th year, you have to deposit Br. 3846.15 in an account that pays 3% per year.

Example 4.

At what interest rate will Br. 5, 000 yield Br. 2, 000 in 8 years time.

Solution:

P = Br. 5, 000

I = Br. 2, 000

t = 8 years

r = ?

$$r = I/pt$$

$$= \frac{2{,}000}{5{,}000\times 8}$$

= <u>0.05</u> = <u>5%</u>

Example 5.

Find the Interest on Br. 5, 000 at 10% for 45 days.

Solution:

P = Br. 5, 000

t = 45 days = 45/360 years

r = 10%

I = ?

I = Prt

= 5, 000 x 0.1 x 45/360

= <u>62.50</u> Br.

<u>Try Your Self:</u>

At what interest rate you should invest Br. 5000, if you want to receive an amount of Br. 7,000 in 8 years time.

Answer = 5%

4.2.2 Compound Interest

If the interest, which is due, is added to the principal at the end of each interest period (such as a month, quarter, and year), then this interest as well as the principal will earn interest during the next period. In such a case, the interest is said to be **compounded**. The result of compounding interest is that starting with the second compounding period, the account earns interest on interest in addition to earning interest on principal during the next payment period. Interest paid on interest reinvested is called **compound interest**.

The sum of the original principal and all the interest earned is the **compound amount**. The difference between the compound amount and the original principal is the compound interest.

The compound interest method is generally used in long-term borrowing unlike that of the simple interest used only for short-term borrowings. The time interval between successive conversions of interest into principal is called the **interest period,** or **conversion period**, or **Compounding period**, and may be any convenient length of time. The interest rate is usually quoted as an annual rate and must be converted to appropriate rate per conversion period for computational purposes. Hence, the rate per compound period (i) is found by dividing the annual nominal rate (r) by the number of compounding periods per year (m):

$$i = r/m$$

Example if r = 12%, i is calculated as follows:

Conversion period (m)	Rate per compound period (i)
1. Annually (once a year)	$i = r/1 = 0.12/1 = 0.12$
2. Semi annually (every 6 months)	$i = r/2 = 0.12/2 = 0.06$

3. Quarterly (every 3 months) ---------- i = r/4 = 0.12/4 = 0.03

4. Monthly ---------- i = r/12 = 0.12/12 = 0.01

Example 1

Assume that Br. 10, 000 is deposited in an account that pays interest of 12% per year, compounded quarterly. What are the compound amount and compound interest at the end of one year?

Solution

P = Br. 10, 000

r = 12%

t = 1 year

m = No. of conversion periods = 4 times per quarter. This means interest will be computed at the end of each three month period and added in to the principal.

i = r/m 12%/4 = 3%

In general, if **p** is the principal earning interest compounded **m** times a year at an annual rate of **r**, then (by repeated use of the simple interest formula, using i = r/m, the rate per period, the amount **A** at the end of each period is:

(1) A = p (1 + i).....compound amount at the end of first period.

If we are interested in determining the compound amount after two periods, it may be computed using the equation:

(2) Compound amount = Compound amount + Interest earned during

after two periods after one period the 2nd period

A = p (1 + i) + [P (1 + i)] (i)

Factoring P and (1 + i) from both terms of the right side of the equation gives us:

$A = P(1 + i)(1 + i)$

$= P(1 + i)^2$

(3) Compound amount after three periods = Compound amount after two period + Interest earned during the 3rd period

$A = P(1 + i)^2 + [P(1 + i)^2](i)$

Factor out p and $(1 + i)^2$ from the terms on the right side of the equation and it gives you:

$A = P(1 + i)^2(1 + i)$

$= P(1 + i)^3$

(4) Compound amount after n^{th} period $= P(1 + i)^n$

The compound amount formulas developed so far are summarized below:

1. Compound amount after one period = $p(1 + i)^1$
2. Compound amount after two periods = $p(1 + i)^2$
3. Compound amount after three periods = $p(1 + i)^3$
4. Compound amount after n^{th} periods = $p(1 + i)^n$

$$\boxed{A = P(1 + i)^n}$$ .....* Compound amount formula.

Where: A = amount (future value) at the end of n periods.

P = Principal (present value)

i = r/m = Rate per compounding period.

n = mt = total number of conversion periods

t = total number of years

m = number of compounding/ conversion periods per

Year

r = annual nominal rate of interest

Now let us solve the above problem.

$A = 10, 000 (1.03)^1$ = Br. 10, 300.....1st quarter

$A = [10, 000 (1.03)] (1.03) = 10, 000 (1.03)^2 = 10, 609$ .....2nd quarter.

$A = [10, 000 (1.03)^2] (1.03) = 10, 000 (1.03)^3 = 10, 927.27$ .....3rd quarter.

$A = [(10, 000) (1.03)^3] (1.03) = 10, 000 (1.03)^4 = 11, 255.088$ .....4th quarter.

In general, the compound amount can be found by multiplying the principal by $(1 + i)^n$. So for the above problem the amount at the end of the year, using the general formula, is equal to:

$A = P (1 + i)^n$ $\qquad$ $n = mt = 4 \times 1 = 4$

$= 10, 000 (1.03)^4$ $\qquad$ $i = r/m = 12\%/4 = 3\%$

= Br. <u>11, 255.088</u>

Compound Interest = Compound amount – original principal

= 11, 225.088 – 10, 000

= Br. <u>1, 255.088</u>

We may evaluate "A" in several different ways. Among the possible alternatives are:

1. Use a hand-held calculator with a Y^x function key. This is the procedure most often used.

2. Using Logarithms

Restate the equation by finding for log A (or In A) and then finding the antilog, using either a hand-held calculator with logarithmic functions or a table of logarithms. Let us illustrate this alternative.

$A = 10,000\ (1.03)^4$

$\log A = \log 10,000 + \log (1.03)^4$

$= \log 10,000 + 4 \log 1.03$

$= \log 104 + 4 \log 1.03$

$= 4 + 4(0.01284)$

$= 4 + 0.05135$

$\log A = 4.05135$

$A = \text{Antilog } 4.05135$

$= \text{Br. } \underline{\underline{11255.117}}$

Basic rules of logarithm

1. $a^x = b$ Eg. $2x = 5$

$\log a^x = \log b$ $\log 2^x = \log 5$

$x \log a = \text{lob } b$ $x \log 2 = \log 5$

$x = \log b / \log a$ $x = \log 5 / \log 2$

$x = \underline{\underline{2.322}}$

2. $ab^x + c = d$

$ab^x = d - c$

$b^x = d - c/a$

$\log b^x = \log \left(\frac{d - c}{a}\right)$ let: $\frac{d - c}{a} = K$

$X \log b = \log K$ divide both side of the equality by log b.

$X = \frac{\log k}{\log b}$

Eg. $4\ (3^x) + 10 = 18$ find the value of X

$4\ (3^x) = 18 - 10$

$4\ (3^x) = 8$ (Divide by 4)

$3^x = 2$

$\log 3^x = \log 2$

$X \log 3 = \log 2$

$X = \frac{\log 2}{\log 3}$

$= \underline{\underline{0.63093}}$

3. $X^3 = a$

$\log X^3 = \log a$

$3 \log x = \log a$

$\log x = \frac{\log a}{3}$; Let $\frac{\log a}{3} = K$

$X = \underline{\underline{\text{Antilog } K}}$

Eg. $X^3 = 1, 000$

$\log X^3 = \log 1, 000$

$3 \log X = \log 10^3$

$\log X = 3/3$

$\log X = 1$

$X = \text{Antilog } 1$

$X = \underline{\underline{10}}$

4. $a = b (c + x)^d$ find the value of X

$(c + x)^d = a/b$

$\log (c + X)^d = \log a - \log b$

$d \log c + X = \log a = \log b$

$\log c + X = \frac{\log a - \log b}{d}$ Let: $\frac{\log a - \log b}{d} = K$

$\log c + x = K$

$c + x = \text{Antilog } K$

$X = \text{Antilog } K - C$

Eg. $1, 000 = 250 (5 + X)^5$

$(5 + X)^5 = \frac{1,000}{250} = 4$

$\log (5 + x)^5 = \log 4$

$5 \log 5 + x = \log 4$

$\log 5 + X = \frac{\log 4}{5}$

$\log 5 + X = 0.120412$

X = antilog 0.120412 – 5

= 1.319508 – 5

= <u>-3.6805</u>

3. The third way of finding the compound amount is using specially prepared tables which provide values of $(1 + i)^n$ for selected values of i and n.

Therefore, to calculate the value of "A" or other variables in the compound interest formula, you can use any of these three approaches which ever convenient to you.

Example 2. Find the compound amount and compound interest after 10 years if Br. 15, 000 were invested at 8% interest;

a) If compounded annually

Compounding annually means that there is one interest payment period per year. Thus

t = 10 years

m = 1

n = mt = 1 x 10 = 10

i = r/m = 8 %/1 = 8% = 0.08

The compound amount will be:

$A = 15, 000 (1.08)^{10}$

= 15, 000 (2.158925)

= Br. <u>32, 383.875</u>

- Compound Interest = compound amount (A) – Principal (P)

  = 32, 383.875 – 15, 000

  = Br. <u>17, 383.875</u>

b) If compounded semiannually

Compounding semiannually means that there are two interest payment periods per year. Thus, the number of payment periods in 10 years n = 2 x 10 = 20 and the interest rate per conversion

period will be i = r/m = 8%/2 = 4%. The compound amount then will be:

$A = P(1 + i)^n$

$= 15,000 (1.04)^{20}$

$= 15,000 (2.191123$

= Br. 32, 866.85

Compound Interest = A – P

= 32, 8666.85 – 15, 000

= Br. 17, 866.85

c) If Compounded quarterly

If compounding takes place quarterly (four times a year), then an 8% annual interest rate, the interest rate per conversion period will be i = 0.08/4 = 0.02, there will be a total of n = 4 x 10 = 40 conversion periods over the 10 years. The compound amount will be:

$A = 15,000 (1.02)^{40}$

$= 15,000 (2.208039)$

= Br. 33, 120.60

d) If compound monthly

p = 15, 000

t = 10 years

m = 12 (12 payment periods per year)

n = 12 x 10 = 120 payment periods over the 10 years

i = r/m = 8%/12 = 0.667% = 0.00667

Under these conditions:

$A = 15,000 (1.00667)^{120}$

$= 15,000 (2.220522)$

= Br. 33, 307.84

Interest = Br. 18, 307.84 (33,307.84 – 15,000)

e) If compounded weekly

m = 52

n = 10 x 520 = 520

i = 8%/52 = 0.154% = 0.00154, then

$A = 15,000\ (1.00154)^{520}$

= Br. 33, 362.60

Interest = 33,362.60 – 15,000

= 18362.60

f) **Try your self: if Compounded daily, and hourly,** what will be the compound amount respectively? Answer = Br. 33,380.19 and Br. 33, 382.99 respectively.

g) **If compounded continuously (Instantaneously)**, what happens to the compound amount if interest is compounded continuously? To drive a formula for continuous compound interest, we begin by writing:

$(1 + i)^n = (1 + r/m)^{mt}$

Then, by inserting 1 = r/r in the exponent, we obtain

$(1 + r/m)^{mt\ (r/r)} = (1 + r/m)^{(m/r).\ (rt)}$

Then, letting m/r = X, we have

$[(1 + 1/x)x]^{rt}$

As X increases indefinitely, the term $(1 + 1/x)^x$ approaches the value of the familiar mathematical constant e = 2.7182818..... This means that the factor

$(1 + i)^n = [(1 + 1/x)^x]^{rt}$ approaches

$\mathbf{e^{rt}}$ as **n** increases indefinitely. The resulting formula for the amount under continuous compounding of interest is given by:

$$\boxed{A = P\ e^{rt}} \qquad \text{.....**}$$

Where: A= amount at the end of time t under continuous compounding

p = principal

r = annual rate, compounded continuously

t= time, in years

Note: the value of e^{rt} may be found using a calculator.

Solution:

p = br. 15, 000

t = 10 years

A = ?

$A = P\ e^{rt}$

$= 15,000\ (e^{0.08 \times 10})$

= 15, 000 x e0.8

= 15, 000 x 2.22554

= Br. 33, 383.11

Compound Interest = 33, 383.11 – 15, 000

= Br. 18, 383.11

What can you observe from the above discussion? When a number of conversion period within a year increases, the interest earned also increases continuously toward an upper limit. The limiting case occurs where interest is compounded continuously.

Example 3.

How long it take to accumulate Br. 8, 000 if you invest Br. 6, 000 at 12% compounded monthly?

Solution:

P = Br. 6, 000

A = Br. 8, 000

r = 12%

i = r/m = 1%= 0.01

t = ? n?

$A = P\ (1 + i)^n$

$8000 = 6000\ (1.01)^n$

we can use logarithm to solve this problem

$\frac{8000}{6000} = (1.01)^n$

$\log 1.3\dot{3} = (1.01)^n$

$\log 1.3\dot{3}\ n \log 1.01$

$$n = \frac{\log 1.3\dot{3}}{\log 1.01}$$

$$n = 28.92 \approx 29 \text{ months}$$

It takes 29 months for Br. 6000 invested at 12% to grow to Br. 8000

The present value

Frequently it is necessary to determine the principal P which must be invested now at a given rate of interest per conversion period in order that the compound amount A be accumulated at the end of n conversion periods. Under these conditions, p is called the present value of A. This process is called discounting and the principal is now a discounted value of future income A. If:

$A = P(1 + i)^n$ then dividing both sides by $(1 + i)^n$ leads to

$$P = \frac{A}{(1+i)^n} = A(1 + i)^{-n}$$

$\boxed{P = A(91 + i)^{-n}}$ ....* Present value of compound amount.

Example 4. How much should you invest now at 8% compounded semiannually to have

Br. 10, 000 toward your brother's college education in 10 years?

Solution

A = Br. 10, 000

t = 10 years

m = 2

n = mt = 20

r = 8%

i = r/m = 4% = 0.04

p = ?

$P = A(1 + i)^{-n}$

$= 10,000(1.04)^{-20}$

$= 10,000(0.456387)$

= Br. 4563.87

4.3 EFFECTIVE RATE

An effective rate is the simple interest rates that would produce the same return in one year had the same principal been invested at simple

interest without compounding. In other words, the effective rate r converted m times a year is the simple interest rate that would produce an equivalent amount of interest in one year. It is denoted by r_e.

If principal p is invested at an annual rate r, compounded m times a year, then in one year,

$$A = P(1 + r/m)^m$$

What simple interest rate will produce the same amount A in one year? We call this simple interest rate the effective rate. To find r_e we proceed as follows:

(Amount at simple interest after 1 year) = (Amount at compound interest after 1 year)

$P(1 + r_e) = p(1 + r/m)^m$ .....Divide both sides by p

$1 + r_e = (1 + r/m)^m$ .....isolate r_e on the left side and gives you:

$$\boxed{r_e = (1 + r/m)^m - 1}$$ .....* effective interest rate formula.

Where: r = nominal annual rate of interest

m = no. of conversion periods per year.

$$\boxed{r_e = e^r - 1}$$ .....** effective interest rate in continuous compounding.

Example 5. An investor has an opportunity to invest in two investment alternatives A and B which pays 15% compounded monthly, and 15.2% compounded semi-annually respectively. Which investment is better investment, assuming all else equal?

Solution

Nominal rate with different compounding periods cannot be compared directly. We must find the effective rate of each nominal rate and then

compare the effective rates to determine which investment will yield the larger return.

Effective rate for investment A

$r = 15\%$

$m = 12$

$i = 1.25\% = 0.0125$

$r_{eA} = (1 + i)^m - 1$

$= (1.0125)^{12} - 1$

$= \underline{\underline{16.076\%}}$

Effective rate for Investment B

$r = 15.2\%$

$m = 2$

$i = 7.6\% = 0.076$

$r_{eB} = (1.076)^{2} - 1$

$= \underline{\underline{15.778\%}}$

Since the effective rate for investment A (16.076%) is greater than the effective rate for investment B (15.778%), A is the preferred investment alternative.

Example 6. What is the effective rate corresponding to a nominal rate of 16% compounded quarterly?

$r_e = (1 + 0.16/4)^4 - 1$

$= (1.04)^4 - 1$

$= 1.169859 - 1$

$= \underline{\underline{16.99\%}}$

4.4 ANNUITIES

An annuity is any sequence of equal periodic payments. The payments may be made weekly, monthly, quarterly, annually, semiannually or for any fixed period of time. The time between successive payments is called payment period for the annuity. If payments are made at the end of each payment period, the annuity is called an **ordinary annuity**. If payment is made at the beginning of the payment period, it is called **annuity due**. In this course we will discuss only ordinary annuities. The amount, or future value, of an annuity is the sum of all payments plus the interest earned during the term of the annuity.

The term of an annuity refers to the time from the begging of the first payment period to the end of the last payment period.

4.4.1 Ordinary Annuity

An ordinary annuity is a series of equal periodic payments in which each payment is made at the end of the period. In an ordinary annuity the first payment is not considered in interest calculation for the first period because it is paid at the end of the first period for which interest is calculated. Similarly, the last payment does not qualify for interest at all since the value of the annuity is computed immediately after the last payment is received.

Future value (Amount) of an ordinary annuity.

Example1. What is the amount of an annuity if the size of each payment is Br. 100 payable at the end of each quarter for one year at an interest rate of 4% compounded quarterly?

Solution

Periodic payment (R) = Br. 100

Payment interval (Conversion period) = quarter

Nominal (annual rate) = r = 4%

Interest per conversion period (i) = r/m = 4%/4 = 1%

Future value of an annuity = ?

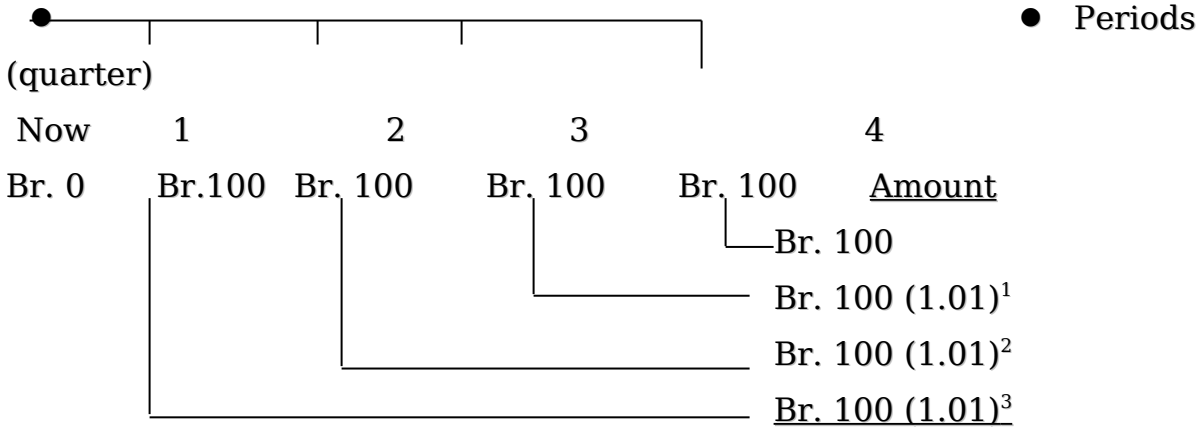

Future value (sum) = 406.04 Br.

Compound interest = Amount – R(n)

= 406.04 – 100 (4)

= Br. 6.04

If R represents the amount of the periodic payment, i represents the interest rate per payment period, and n represents the number of payment periods, then

R R R -------- R R

0 1 2 3 ------- n-1 Periods

The first payment of R accumulates interest for n-1 periods, the second payment R for n – 2 periods etc. The last payment accumulate no interest, the next to last payment accumulates one period for interest. So using the future value for compound interest we see the future value of the annuity:

$A = R(1 + i)^{n-1} + R(1 + i)^{n-2} + \ldots\ldots\ldots + R(1 + i)^{1} + R$....Equation 1

Multiplying each side of the equation by (1 + i), we obtain

$A(1 + i) = R(1 + i)^{n} + R(1 + i)^{n-1} + \ldots\ldots\ldots + R(1 + i)^{2} + R(1 + i)$ ..... Eg. 2.

Then subtracting the first equation (eq. 1) from the second equation (eq. 2), gives you:

$A(1 + i) = R(1 + i)^{n} + R(1 + i)^{n-1} + \ldots\ldots + R(1 + i)^{2} + R(1 + i)$

$A = R(1 + i)^{n-1} + \ldots\ldots R(1 + i)^{2} + R(1 + i) + R$

$A(1 + i) - A = R(1 + i)^{n} - R$

$A[(1 + i)] = R[(1 + i)^{n} - 1]$

$A(i) = R[(1 + i)^{n} - 1]$ Dividing both sides by i, we have

$$A = \left[\frac{R(1+i)^{n} - 1}{i}\right]$$

.....* Amount of an ordinary annui

Where: A = Amount (future value) of an ordinary annuity at the end of its term

R = Amount of periodic payment

i = interest rate per payment period

n = (mt) total no. of payment periods

Solve the above problem (example 1) using the annuity formula:

$$A = \left[\frac{100(1.04)^4 - 1}{0.04}\right]$$

$$= \underline{\underline{\text{Br. } 406.04}}$$

Example 2. Mr X. Deposits Br. 100 in a special savings account at the end of each month. If the account pays 12%, compounded monthly, how much money, will Mr. X have accumulated just after 15th deposit?

Solution:

R = Br. 100

n = 15

r = 12%

m = 12

i = r/m = 12%/12 = 1%

$$A = R\left[\frac{(1+i)^n - 1}{1}\right]$$

$$= 100\left[\frac{(1.01)^{15} - 1}{0.01}\right]$$

$$= 100\ (16.096896)$$

$$= \underline{\underline{\text{Br. } 1609.69}}$$

Example 3. A person deposits Br. 200 a month for four years into an account that pays 7% compounded monthly. After the four years, the person leaves the account untouched for an additional six years. What is the balance after the 10 year period?

Solution:

R = Br. 200

t = 4 years

m = 12

n = mt = 4 x 12 = 48

r = 7%

i = 7%/12 = 0.07/12

Amount after 4 years (A_4)= 200 $\left[\frac{(1+0.07/12)^{48} - 1}{0.07/12}\right]$

= 200 (55.20924)

= Br. 11, 041.85

After the end of the fourth year, we calculate compound interest rate taking Br. 11, 041.85 as principal compounded monthly for the coming 6 years.

p = 11, 041.85

t = 6 years

m = 12

n = 6 x 12 = 72

r = 7%

i = r/m = 7%/12 = 0.07/12

A_{10} = ?

A_{10} = 11, 041.85 $(1 + 0.07/12)^{72}$

= 11, 041.85 (1.5201

= Br. 16, 784.77

Therefore, the balance after 10 years is Br. 16, 784.77.

4.4.2 Sinking Fund

A sinking fund is a fund into which equal periodic payments are made in order to accumulate a definite amount of money up on a specific date. Sinking funds are generally established in order to satisfy some financial obligations or to reach some financial goal.

If the payments are to be made in the form of an ordinary annuity, then the required periodic payment into the sinking fund can be determined by reference to the formula for the amount of an ordinary annuity. That is, if:

$$A = R\left[\frac{(1+i)^n - 1}{i}\right] \qquad \text{then,}$$

$$R = \frac{A}{\frac{(1+i)^n - 1}{i}}$$

$$= A \left[\frac{i}{(1+i)^n - 1} \right]$$

Example 4. How much will have to be deposited in a fund at the end of each year at 8% compounded annually, to pay off a debt of Br. 50, 000 in five years?

Solution:

A = Br. 50, 000

t = 5 years

m = 1, n = 5 (5 x 1)

r = 8%

i = r = 8%

R = ?

$$R = A \left[\frac{i}{(1+i)^n - 1} \right]$$

$$= 50,000 \left[\frac{(0.08}{(1.08)^5 - 1} \right]$$

= 50, 000 (o.174056)

= Br. 8, 522.80

The total amount of deposit over the 5 year period is equal to 5 x 8, 522.80 = Br.42, 614

Example 5. Ato Ayalkebet has a savings goal of Br. 100, 000 which he would like to reach 15 years from now. During the first 5 years he is financially able to deposit only Br. 1000 each quarter into the savings account. What must his quarterly deposit over the last 10 (ten) years be if he is to reach his goal? The account pays 10% interest, compounded quarterly.

Solution:

For the first 5 years

R = Br. 1, 000

t = 5 years

m = 4

n = 20

r = 10 %

$$A_5 = 1,000 \left[\frac{(1.01)^{20} - 1}{0.01} \right]$$

= 1000 (22.019)

= Br. <u>22019</u>

i = 2.5%

A_5 = ?

This sum (Br. 22,019) will continue to draw interest at the rate of 10%; compounded quarterly, over the next 10 years; and the amount at the end of the 10th year will be:

t = 10 years

m = 4

n = 40

i = 2.5%

$A_{10} = 22019\ (1.025)^4$

$= 22019\ (1.103813)$

= Br. <u>24304.86</u>

To determine the periodic payment for the remaining 10 years, we subtract Br. 24, 304.86 from Br. 100, 000 to obtain the amount of an ordinary annuity for the last 10 years which is equal to Br. 75695.14 (100, 000 – 24, 304.86)

$$R = 75695.14 \left[\frac{0.025}{(1.025)^{40} - 1} \right]$$

= 75, 695.14 (0.014836)

= <u>Br. 1, 123.03</u>

Thus, if Ayalkebete makes quarterly payments of Br. 1000 into a savings account over the first five years and then quarterly payments of Br. 1, 123.03 over the next 10 years, he will reach his savings goal of Br. 100, 000 at the end of 15 years.

4.4.2 Present value of an ordinary annuity

The present value of an ordinary annuity is the sum of the present values of all the payments, each discounted to the beginning of the term of the annuity. It represents the amount that must be invested now to purchase the payments due in the future.

The present value of an annuity can be computed in two ways:

- Discounting all periodic payments to the present (beginning of the term individually) or
- Discounting the future value (amount) of an annuity to the beginning of the term

Example 6. What is the present value of an annuity if the size of each payment is Br. 200 payable at the end of each quarter for one year and the interest rate is 8% compounded quarterly?

Solution:

R = Br. 200

r = 8%, i = 2%

m = 4

n = 4

p = ?

Using the first approach (discounting each payment individually), the present value will be:

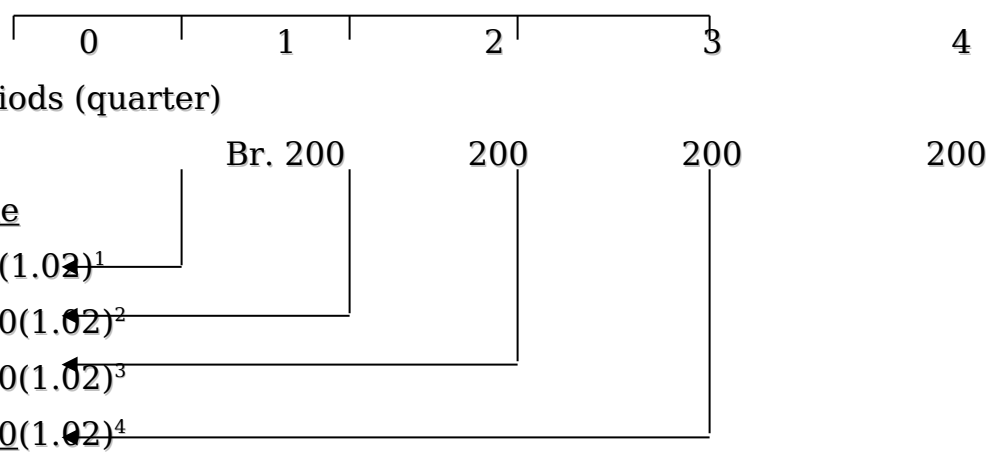

<u>Present value</u>

$196.1 = 200(1.02)^{1}$

$192.23 = 200(1.02)^{2}$

$188.46 = 200(1.02)^{3}$

$184.77 = 200(1.02)^{4}$

761.56 Br = Present value.

Equivalently we may find the future value of the ordinary annuity using the formula and then discount it to the present taking it as a single future value.

$$A = R\left[\frac{(1+i)^n - 1}{i}\right]$$

$$= 200\left[\frac{(1.02)^4 - 1}{0.02}\right]$$

$$= \text{Br. } \underline{\underline{824.32}}$$

$$P = A\,(1 + i)^{-n}$$

$$= 824.32\,(1.02)^{-4}$$

$$\text{Br} = \underline{\underline{761.56}}$$

If we multiply the future value of an ordinary annuity by the compounding discounting factor, we get the present value of an annuity as follows:

$$P = R\left[\frac{(1+i)^n - 1}{i}\right]\ ((1 + i)^{-n})$$

$$= R\left[\frac{(1+i)^n (1+i)^{-n} - (1+i)^{-n}}{i}\right]$$

$$= \left[\frac{(1+i)^0 - (1+i)^{-n}}{i}\right]$$

$$\boxed{P = R\left[\frac{1 - (1+i)^{-n}}{i}\right]}$$ .....* Present value of an ordinary a

Using the formula, the present value of the above example is computed as:

R = Br. 200

r = 8%, i = 2%

m = 4

t = 4

$$P = R\left[\frac{1 - (1+i)^{-n}}{i}\right]$$

$$= 200\left[\frac{1 - (1.02)^{-4}}{0.02}\right]$$

$$= 200\,(3.80773)$$

$$= \underline{\underline{\text{Br. } 761.55}}$$

Example 7. What is the present value of an annuity that pays Br. 400 a month for the next five years if money is worth 12% compounded monthly?

Solution:

R = Br. 400

t = 5 years

m = 12

n = 12 x 5 = 60

r = 12%

i = 12%/12 = 1% = 0.01

p = ?

$$P = R\left[\frac{1-(1+i)^{-n}}{i}\right]$$

$$= 400\left[\frac{1-(1.01)^{-60}}{0.01}\right]$$

= 400 (44.955037)

= Br. <u>17, 982.01</u>

4.4.3 Amortization

Amortization means retiring a debt in a given length of time by equal periodic payments that include compound interest. After the last payment, the obligation ceases to exist it is dead and it is side to have been amortized by the periodic payments. Prominent examples of amortization are loans taken to buy a car or a home amortized over periods such as 5, 10, 20 or 30 years.

In amortization the interest is to determine the periodic payment, **R**, so as to amortize (retire) a debt at the end of the last payment. Solving the present value of ordinary annuity formula for R in terms of the other variable, we obtain the following amortization formula:

$$\boxed{R = P\left[\frac{i}{1-(1+i)^{-n}}\right]}$$ .....** Amortization formula

Where: R = Periodic payment

P = Present value of a loan

i = Rate per period

n = Number of payment periods

Example:1

1. Ato Elias borrowed Br. 15, 000 from Commercial Band of Ethiopia and agree to repay the loan in 10 equal installments including all interests due. The banks interest charges are 6% compounded Quarterly. How much should each annual payment be in order to retire the debt including the interest in 10 years.

Solution

Pv = Br. 15, 000

t = 10 y n = 10 x 4 = 40

m = 4

r = 6% i= 6%/4

R = ?

$$R = 15,000\left[\frac{0.015}{1-(1.015)^{-40}}\right]$$

= 15, 000 (0.033427)

= Br. 501.4

Interest = [501.4 x 40] – 15, 000

= 20056 – 15,000

Check your progress:

If you have Br. 100,000 in an account that pays 6% compounded monthly and I you decide to withdraw equal monthly payments for 10 years at the end of which time the account will have a zero balance, how much should be withdrawn each month?

Answer: Br. 1,110.205

2. An employee has contributed with her employer to a retirement plan for 20 years a certain amount twice a year. The contribution earns an interest rate of 10% compounded semiannually. At the date of her retirement the total retirement benefit is Br. 300, 000. The retirement program provides for investment of this amount at an interest rate of 10% compounded semiannually. Semiannual payments will be made for 10 years to the employee of her family in the event of her death.
    1. What semi annual payment should she made?
    2. What semi annual payment should be made for her or her family?

3. How much interest will be earned on Br. 300, 000 over the 40 years?

Solution:

Retirement plan

Employment period | Retirement period

Tim

0 Pay 20 Receive 40 yrs

m = 2

A_{20}= 300, 000 Br. R2 = ?

t= 20yrs Pv = 300, 000

m= 2, n = 40 t = 20 yrs,

r= 10%, i = 5% m = 2, n = 40

R_1 = ? r = 10%, I = 5%

$$R_1 = 300,000\left[\frac{0.05}{1-(1.05)^{-40}}\right] \qquad R_2 = \left[\frac{0.05}{1-(1.05)^{-40}}\right] \times 300,000$$

= Br. 2483.45 = 17483.45

4.4.4 Mortgage Payments

In a typical home purchase transaction, the home buyer pays part of the cost in cash and borrows the remaining needed, usually from a bank or a savings and loan associations. The buyer amortizes the indebtedness by periodic payments over a period of time. Typically **payments** are **monthly** and the time period is long such as 30 years, 25 years and 20 years. Mortgage payment and amortization are similar. The only differences are:

- the time period in which the debt/ loan is amortized /repaid/
- the amount borrowed.

In mortgage payments m is equal to 12 because the loan is repaid from monthly salary or Income, but in amortization money take other values. Similarly stated mortgage payments are of amortization in nature

involving the repayment of loan monthly over an extended period of time.

Therefore, in mortgage payments we are interested in the determination of monthly payments.

Taking:

A = total debt

R = monthly mortgage payments

r = stated nominal rate per annum

n = 12 x number of years (period of the loan)

R can be determined as follows:

$$R = A\left[\frac{r/12}{1-(1+r/12)^{-n}}\right] \quad \text{or} \quad R = A\left[\frac{i}{1-(1+i)^{-n}}\right]$$

$$A = R\left[\frac{1-(1+r/12)^{n}}{r/12}\right]$$

Example: 1

Ato Assefa purchased a house for Br. 115, 000. He made a 20% down payment with the balance amortized by a 30 year mortgage at an annual interest of 12% compounded monthly so as to amortize/ retire the debt at the end of the 30th year.

Required:

1. Find the periodic payment
2. Find the interest charged.

Find the interest charged.

Solution:

Selling price = Br. 115, 000 r = 12%, i = 0.01

Less: Down payment = 23, 000 (20% x 115,000) m = 12, n = 360

Mortgage (A) = Br. 92, 000 t = 30 years

R = ?

$$R = A\left[\frac{r/12}{1-(1+r/12)^{-n}}\right] = 92,000\left[\frac{0.01}{1-(1.01)^{-360}}\right]$$

= 92, 000 (0.010286125)

= Br. 946.32

Ato Assefa should pay Br. 946.32 every month to retire the debt within 30 years or 360 monthly payments.

Interest = Actual payment – mortgage (loan)

= (946.32 x 360) – 92, 000

= Br. 340, 675.20 – 92, 000

= Br. 248, 675.20

Throughout the 30 years period the loan earns an interest of Br, 284,675.20

Example: 2

Ato Amare purchased a house for Br. 50, 000. He made an amount of down payment and pay monthly Br. 600 to retire the mortgage for 20 years at an annual interest rate of 24% compounded monthly.

Required.

Find the mortgage, down payment, interest charged and percentage of the down payment to the selling price.

Solution:

Selling price = Br. 50, 000

Down payment = ?

Mortgage (A) = ?

R = Br. 600

r = 24%, i = 2%

m = 12, n = 240

t = 20 years

* Mortgage (A) = $R\left[\frac{1-1(1+i)^n}{i}\right]$

$$= 600 \left[\frac{1 - (1.02)^{-240}}{0.02} \right]$$

= 600 (49.56855)

= Br. <u>29, 741.13</u>

* Down payment = Selling price – mortgage.

= 50, 000 – 29741.13

= <u>Br. 20, 288.87</u>

* Interest charged = Actual payment – mortgage]

= 600 x 240 – 29, 741.13

= 144000 – 29741.13

= Br. <u>114, 258.87</u>

* Percentage of down payment = $\frac{Down\ payment}{Selling\ price} X\ 100\%$

$$= \frac{20258.87}{50000} X\ 100\%$$

= <u>40.52 %</u>

<u>Try your self (check your progress)</u>

Ato Liku purchases a house for Br. 250, 000. He makes a 20% down payment, with a balance amortized by a 30 year mortgage at an annual interest rate of 12% compounded monthly.

a) Determine the amount of the monthly mortgage payment.
b) What is the total amount of interest Ato Liku will pay over the life of the mortgage?
c) Determine the amount of the mortgage Ato Liku will have paid after 10 years?

<u>Answer:</u>

a) R = Br. 2,507.20
b) Interest = Br. 540,602.80
c) Payment after 10 years = Br. 13,16357

4.5 EXERCISES/ PROBLEMS

1. If you borrow Br. 1, 000 from Commercial Bank of Ethiopia for 1 year to pay at 6% interest rate your tuition fee. Find the simple interest and the maturity value of the loan.

2. What is the present value of a loan that will amount to Br. 5, 000 in 5 years if money is worth 3% compounded semi-annually?

3. How much should be deposited in an account paying 10% compounded quarterly in order to have a balance of Br. 10, 000 ten (10) years from now? What would be the amount of compound interest after 10 years?

4. A small boy at the age of 10 drops 0.25 cents into a Jar each day. At the end of each month (30 days months) he deposits this amount at Dashen Bank that pays 5% interest compounded quarterly. If he makes the deposit without interruption, how much will the boy have at the age of 20.

5. Hiwot deposits Br. 1, 000 at the end of every 3 months period in to an account for 5 years which earn 10% interest compounded quarterly and then her deposits are changed to Br. 500 monthly for the next 5 years which earn 12% interest compounded monthly. How much is the account by the end of the time period considered?

6. NTT Company purchased a delivery truck on credit from AMCE which requires a payment of Br. 400, 000 plus 5% interest compounded annually at the end of 5 years. The Company plans to set up a sinking fund to accumulate the amount required to settle the debt.

   Required:

   A. find the total debt at the end of the 5 year.

B. what should be the monthly deposit into the fund be if the account pays 15% interest, compounded monthly?

7. If Br. 10, 000 is invested at 8% compounded:
   A. Annually
   B. Semi Annually
   C. Quarterly
   D. What can you observe from your answers in A, B and C

   What is the amount after 5 years?

8. Assume you won a lottery and you want to deposit/ invest your money in the following to investment alternatives. Investment A which pays 15% compounded monthly and B that pays 14% compounded semi annually, which is the better investment, assuming other things are the same.

4.6 ANSWER TO THE EXERCISE / PROBLEMS

1. **Given:**

   P = 1, 000 Br.

   T = 1year

   R = 6% / year

   I = ?

   A = ?

   Solution

   I = PRT

   = 1, 000 x 0.06 x 1

   = Br. 60

   A = P + I

   = 1, 000 + 60

   = Br. 1060

   or A = P (1 + rt)

   = 1, 000 (1 + 0.06 x 1)

   = 1, 000 (1.06)

   = Br. 1, 060

2. Given:

   A = Br. 5, 000

   t = 5 years

   r = 3% / year

   Solution:

   $p = A (1 + i)^{-n}$

   $= 5, 000 (1.0015)^{-10}$

   = 5, 000 (0.985123)

m = 2 time = Br. 4925.62

n = mt = 2 x 5 = 10

i = r/m = 3%/2 = 1.5%

p = ?

3. Given:

p = 10, 000

t = 10 years

m = 4 times

r = 10%

i = 10%/4 = 2.5%

n = mt = 10 x 4

= 40

A = ?

Solution:

$A = P(1 + i)^n$

$= 10, 000 (1.0025)^{40}$

$= 10, 000 (1.105033)$

= 11. 050.33 Br.

Compound Interest = A - P

= 11, 050.33 – 10, 000

= 1050.33 Br.

5) **Solution**

Amount of money at the end of every month the boy will have Br. 7.50 (0.25 x 30) to be deposited at Dashen Bank.

Therefore, R = 7.50

t = 10 years

r = 5%

m = 4, n = 40

i = 5%/4= 0.00

$$A = 7.5 \left[\frac{(1.00125)^{40} - 1}{0.00125} \right]$$

= 7.5 x 514.89557

= Br. 3861.72

If the small boy saves 0.25 cents every day and deposits if monthly in a bank account that pays 5% compounded quarterly, he will have Br. 3,861.72 at after 1(

6. **Solution**

First 5 years

R1 = 100(

r = 10%

$$A_1 = 1,000 \left[\frac{(1.025)^{20} - 1}{0.025} \right]$$

= 1,000 (25.54466)

= Br. 25544.66

This amount will be compounded quantity at a 12% interest rate.

Therefore. The amount at the end of the next 5 years will be calculated as follows.

m = 4

i = 2.5%

t = 5

n = 20

A_5 = ?

7. a) A = ?

t = 5 years

p = 400, 000 Br.

m = 1,

r = 5%, n = 5

$A = P(1 + i)^n$

= 400, 000 (1.05)5

= <u>510512.625</u> Br.

b) Given

A = 510512.625 Br.

t = 5 years

m = 12

n = 5 x 12 = 60

r = 12%

i= 1%

R = ?

$$R = A\left[\frac{i}{(1+i)^n - 1}\right] = 510512.625 \text{ X } \frac{0.01}{(1.01)^{60} - 1}$$

$$= 510512.625 \text{ x } \frac{0.01}{0.8166966}$$

= 5150512.625 x 0.0122444

= Br. <u>6250.95</u>

The company should deposit Br. 6250.95 every month for 5 years or 60 periods to a stinking fund in order to settle its debt of 510512.625

8. Check your progress

Answer A) A =Br. 14693.28

B) A = Br. 14862.44

C) A = Br. 14859.47

9. **Solution:** Nominal rates with amount compounding periods in this case (quarterly and monthly) cannot be compared directly. You have to find the effective rate of each nominal rate and then compare the effective rates to determine which investment will yield the return

Effective rate for A =

Effective rate for Investment A:

$r_eA = (1 + i)^M - 1$

$= (1 + 0.0125)^{12} - 1$

$= 0.16075 = 16.075\%$

Effective rate for Investment B:

$r_eB = (1 + 0.07)^2 - 1$

$= (1.07)^2 - 1$

$= \underline{0.1449 = 14.5\%}$

Therefore, investment A is a better alternative

P = 25,544.66

r = 12%

m = 12

i = 1%

t = 5

n = 5 x 12 = 60

$A_{10} = (25544.66\ (1.01)^{60}$

= Br. 46406.895

Since Hiwot continues her payment for the second 5 years of Br. 500, the amount will be calculated using an annuity formal as:

$$A_2 = 500 \left[\frac{(1.01)^{60} - 1}{0.01} \right]$$

= 500 (81.66966)

= Br. 40834.845

At the end of the 10 years Hiwot will have a total amount of Br. 87,241.73 (Br. 46,406.9 + Br. 40834.84).