

BASIC TECHNICAL DRAWING

Teacher Guide

Grade 11

Prepared by:

Amanuel Berhanu (BSc.)
Tolossa Deberie (MSc.)

Edited and Reviewed by:

Abebe Basazeneu
Natenael Abebe
Yared Mekuria

Join our telegram channel
@aplusacademyy

FEDERAL DEMOCRATIC REPUBLIC OF ETHIOPIA
MINISTRY OF EDUCATION

KURAZ INTERNATIONAL
PUBLISHER

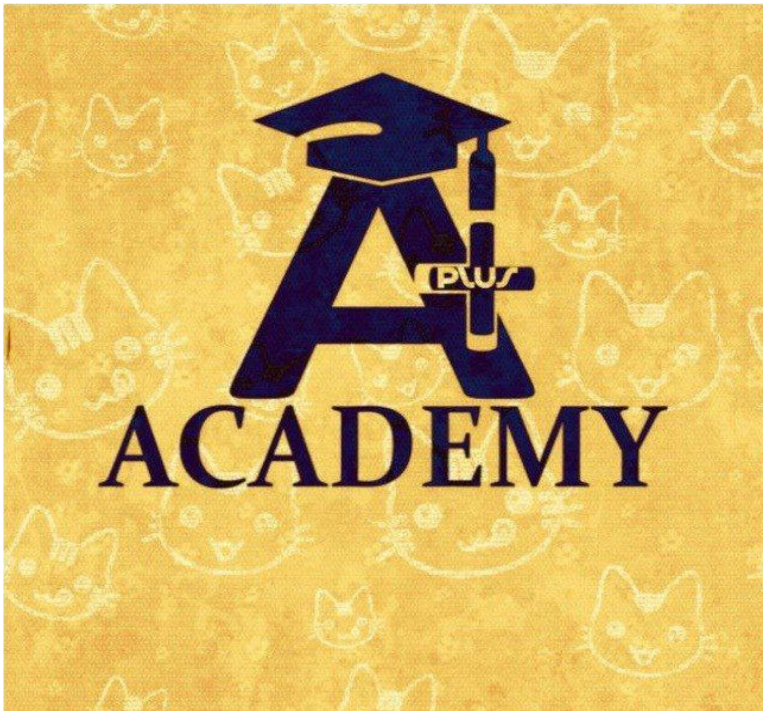

Join our telegram channel
@aplusacademyy

Acknowledgements

The redesign, printing and distribution of this teacher guide has been funded through the General Education Quality Improvement Project (GEQIP), which aims to improve the quality of education for Grades 1–12 students in government schools throughout Ethiopia.

The Federal Democratic Republic of Ethiopia received funding for GEQIP through credit/financing from the International Development Associations (IDA), the Fast Track Initiative Catalytic Fund (FTI CF) and other development partners – Finland, Italian Development Cooperation, the Netherlands and UK aid from the Department for International Development (DFID.

The Ministry of Education wishes to thank the many individuals, groups and other bodies involved – directly and indirectly – in publishing the teacher guide and accompanying textbook.

© Federal Democratic Republic of Ethiopia, Ministry of Education

First edition, 2003(E.C.)

Developed, printed and distributed for the Federal Democratic Republic of Ethiopia, Ministry of Education by:

Al Ghurair Printing and Publishing House CO. (LLC)
PO Box 5613
Dubai
U.A.E.

In collaboration with

Kuraz International Publisher P.L.C
P.O. Box 100767
Addis Ababa
Ethiopia

ISBN : 978-99944-2-091-9

All rights reserved. No part of this publication may be reproduced, stored in a retrieval system or transmitted in any form or by any means (including electronic, mechanical, photocopying, recording or otherwise) either prior written permission of the copyright owner or a licence permitting restricted copying in Ethiopia by the *Federal Democratic Republic of Ethiopia, Federal Negarit Gazeta ,Proclamation No. 410/2004 Copyright and Neighbouring Rights Protection Proclamation, 10th year, No. 55, Addis Ababa, 19 July 2004.*

Disclaimer

Every effort has been made to trace the copyright owners of material used in this document. We apologise in advance for any unintentional omissions. We would be pleased to insert the appropriate acknowledgement in any future edition.

ACADEMY

Join our telegram channel
@aplusacademyy

Foreword

Education and development are closely related endeavours. This is the main reason why it is said that education is the key instrument in Ethiopia's development. The fast and globalised world we now live in requires new knowledge, skills, attitudes and values on the part of each individual. It is with this objective that the curriculum, which is a reflection of a country's education system, must be responsive to changing conditions.

It is more than fifteen years since Ethiopia launched and implemented the *Education and Training Policy*. Since then our country has made remarkable progress in terms of access, equity and relevance. Vigorous efforts also have been made, and continue to be made, to improve the quality of education.

To continue this progress, the Ministry of Education has developed a Framework for Curriculum Development. The Framework covers all pre-primary, primary, general secondary and preparatory subjects and grades. It aims to reinforce the basic tenets and principles outlined in the *Education and Training Policy*, and provides guidance on the preparation of all subsequent curriculum materials – including this teacher guide and the student textbooks that come with it – to be based on active-learning methods and a competency-based approach.

Publication of a new Framework and revised textbooks and teacher guides are not the sole solution to improving the quality of education in any country. Continued improvement calls for the efforts of all stakeholders. The teacher's role must become more flexible ranging from lecturer to motivator, guide and facilitator. To assist this, teachers have been given, and will continue to receive, training on the strategies suggested in the Framework and in this teacher guide.

Teachers are urged read this guide carefully and to support their students by putting into action the strategies and activities suggested in it. The guide includes possible answers for the review questions at the end of each unit in the student textbook, but these answers should not bar the students from looking for alternative answers. What is required is that the students are able to come up with, and explain knowledgeably, their own possible answers to the questions in the textbook.

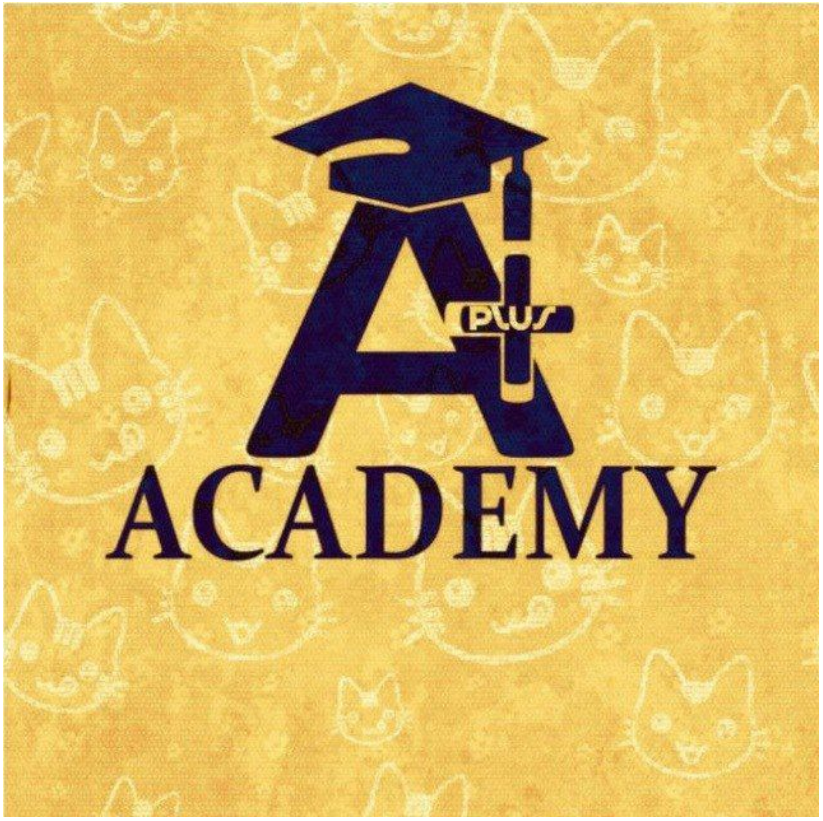

Table of Contents

Page

UNIT 1: Introduction to Technical drawing 1

UNIT 2: Basic Technical drawing equipments 7

UNIT 3: Alphabet of Lines 17

UNIT 4: Lettering 23

UNIT 5: Geometrical Construction 33

UNIT 6: Multi–View Drawing 44

UNIT 7: Pictorial Drawing 63

Reference 94

ACADEMY

Join our telegram channel
@aplusacademyy

UNIT 1

INTRODUCTION TO TECHNICAL DRAWING

Total Period: 1

Unit Outcome

At the end of this unit, students should be able to:

- ✓ Appreciate the contribution of graphical language (Drawing) in human civilization;
- ✓ Understand the basic concepts, purpose and areas/ professional disciplines of technical drawing.

Unit Overview

Technical drawing is a universal language by means of which the form, size, finish, colour, and construction of an object can be described accurately and clearly. Therefore it is the language used by engineers and architects to develop and record their ideas and to transmit them to those who are to execute their designs.

Without the ability to communicate well, engineers cannot function in a team and are of limited value to industry. Technical drawing is therefore essential communication tool for engineers. Using

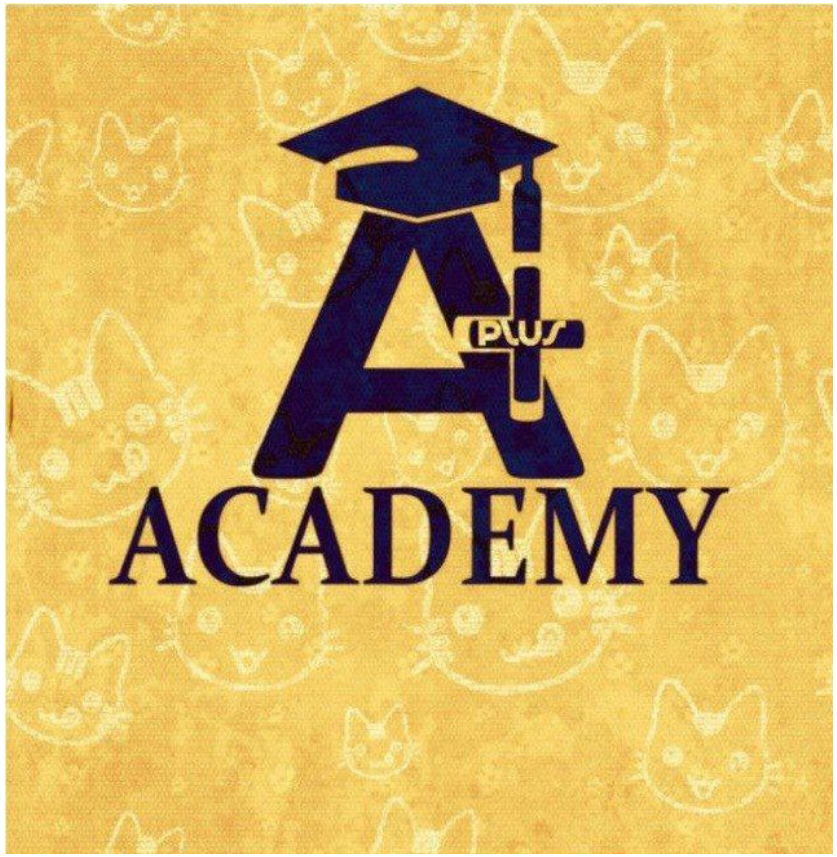

established drawing conventions (orthographic projections and isometric drawings

Lesson 1.1 *Introduction to technical drawing*

Number of Period: 1

Learning Competencies

At the end of this lesson, students should be able to:

- explain technical drawing.
- explain how and when drawing is originated.
- understand the difference in artistic and technical drawing.
- describe the area/professional disciplines of technical drawing involves.
- outline the use of technical drawing in designing;
- describe how to use technical drawing in the manufacturing industry.
- describe some important applications of technical drawing in every day life.
- state the advantage of CADD in related to manual work.
- explain the educational value of technical drawing.

Planning ahead

This lesson introduce students to the language of technical drawing. Through demonstration, and handouts, the students will learn the beginning standards for technical drawing.



1. Prepare visual aids to show "examples of drawings drawn by hand and CAD"
2. prepare photos of ancient graphics
3. Identify the Standards. Standards should be posted in the classroom for each lesson now onwards.
4. Review essential questions, "why is it important for drawing to be a standard, common language among all drafters or designers?"

Hints for Teaching

. Explain the "universality" of the graphic language and the need for all drafters and designers to be able to communicate worldwide in a common way. Explain the use of standards. Emphasize how drawing is a language made through symbols and the usage of lines to "speak" without using words.

Discussion

1. Ask students the kinds of drawings they can name. List them as they name them and ask whether they know what kind of designer does that kind of drawing, e.g., floor plans. Then list architect beside the term. Have students take notes from the list.
2. Explain process of going from idea into production. Illustrate Graphic Communications.
3. Explain and demonstrate traditional (board) drafting and CAD drafting.

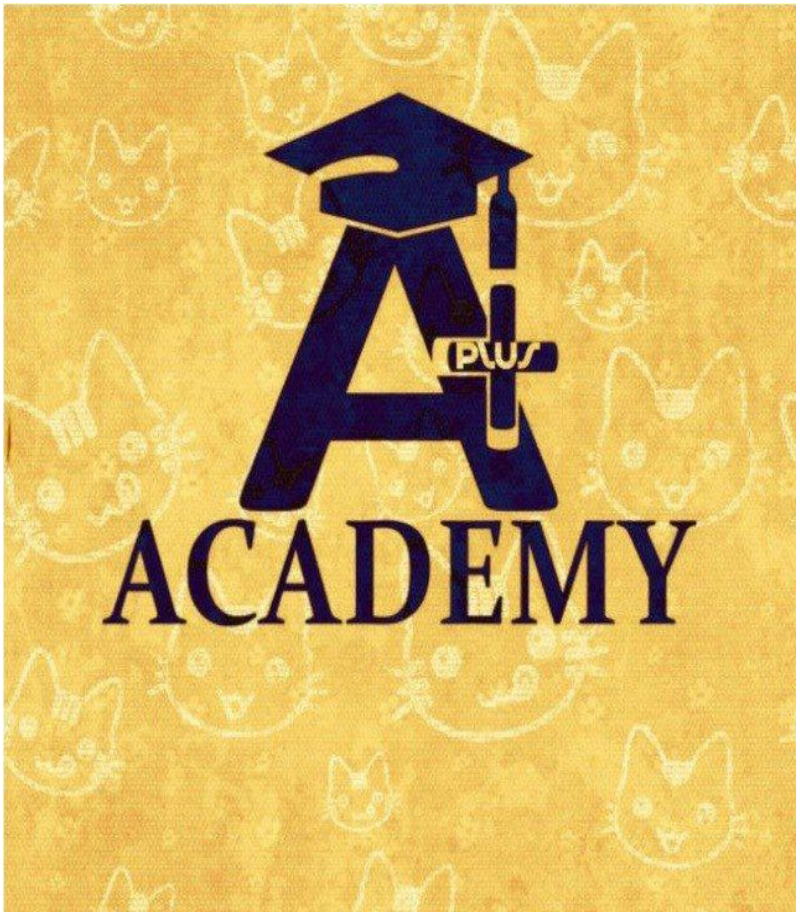

4. Use visual aids to show "examples of drawings."
5. Discuss the educational value of Technical drawing.
6. Explain the difference in artistic and technical drawing. Give definitions and have students list in notes.
7. At last, give peer group activity from the text and follow their participation.

Teaching Note

Technical drawing, also known as drafting, refers to the discipline of producing precise illustrations of things in fields like architecture and engineering. Generally, the term technical drawing pertains to any kind of drawing fashioned with technical ideas. Good examples of technical drawing are mechanical drawings, charts, and sketches. Technical drawings are a means of graphic communication, which aims to clearly and concisely communicate information about transforming technical ideas or concepts into reality. A technical drawing often contains both a graphic representation of its subject, and dimensions, notes and specifications.

Today the mechanics of the drafting task have been greatly accelerated through the use of computer-aided design and drafting systems, but regardless of whether a draft is drawn by hand or with computer assistance, the field-use-drawing must be reproducible with a version control system to maintain authorized and approved changes to the master document (or computer files, the modern analog).

Join our telegram channel
@aplusacademyy

In some fields, particularly electronics, draftsmen are also known by the ambiguous "designer", whose job would be distinct and separate from the engineers specifying and working out the design details. In short, draftsmen are communicators that are part of an engineering team charged with producing specialty documentation packaged as a design, which following the standards of the field, can be understood by others with the same training. Technical drawing in perspective is a universal picture language by which ideas and information may be readily available for others.

Lesson Guide

Period	Lesson title	Starter activity	Main activities	Concluding activities
1	1.1 Introduction	• Ask brain storming question and discuss by listing the type and purpose of drawing around the school.	• . Assist students to discuss why technical drawing is a universal language and help them to do the activity 1.1 in the textbook	Summarize the lesson and give home work to list pros and cons of manual drawing and CAD system of drawing

Evaluation

Instruct students to:

- Explain why drawing is a universal language
- Identify the difference b/n artistic and technical drawings.
- List the classification of technical drawings.
- Differentiate the advantage and disadvantage between manual drawing and computer aided design software

Join our telegram channel
@aplusacademyy

- using line drawing show the direction from their home to school

Method

- Presentation (lecture)
- Demonstration
- Group discussion (6-8 students per a group)

Assessments

The teacher should follow and assess each student's work continuously over the whole activity of the lesson and compare it with the following description to determine whether the student has achieved the minimum required level.

Students working below the minimum requirement level will require extra help if they are to catch up with the rest of the class. They should be given extra attention in class and additional activities at the end of the lesson or during breaks.

Students working above the minimum requirement level should be praised and their achievements recognized. They should be encouraged to continue working hard and not become complacent.

Join our telegram channel
@aplusacademyy

UNIT 2

BASIC TECHNICAL DRAWING EQUIPMENTS

Total Periods: 2

Unit Outcomes

At the end of this unit, students should be able to:

- ✓ understand the types, proper uses and applications of basic Technical drawing Equipments;
- ✓ Apply each basic technical drawing instruments and materials in making drawings.

Unit Overview

Good working habits should be in the drawing office. The students understand the uses of drawing instrument and materials. Therefore they will Identification the following basic drawing instruments and materials: drawing board, T-square, set squares (30° and 45°), protractor, compasses, eraser, pencils, drawing papers, dividers, scale rule and French curves. The students should know how to care and maintain their drawing equipment and materials. Finally practice individually the correct use of drawing equipment and materials.

Join our telegram channel
@aplusacademyy

Lesson 2.1 *Selection of drawing materials and instruments*

Number of Periods: 1

Learning Competencies

At the end of this lesson, students will be able to:

- ✓ identify drawing materials and instruments.
- ✓ List different types of material and instruments of Technical drawing
- ✓ Describe the purpose of each technical drawing equipment.
- ✓ State the different types of pencil, paper and Rapidograph.

Planning ahead

Through demonstration, and handouts, the students will learn the types of materials and instruments used in technical drawing. Preparation should be the following:-

1. Make ready the various drawing instruments and materials to display for the students.
2. Program the way and time allotment for providing the activities and how many students will be participate in a group work.

Hints for Teaching and Teaching Notes

Explain and demonstrate the types of drawing materials and instruments with their uses.

Discussion

1. Ask students the kinds of technical drawings material and instruments they can name. List them as they name them and ask which specific purpose they use.
2. Demonstrate their use by using traditional (board) tools.
3. Instructors should choose activities to support whichever system of teaching is used. Give activity 2.1 from student textbook.
4. This lesson is help to introduce for the student to give basic drafting equipment knowledge and skills through using traditional (board) tools..

Lesson 2.2 *Application and Care for basic technical drawing equipments*

Number of Periods: 1

Learning Competencies

At the end of this lesson, students will be able to:

- arrange appropriate working area before starting drawing;
- Select drawing equipments in their specific purpose.
- explain how to care for and maintain drawing instruments and materials.
- prepare the title block on drawing paper by lay out borders.

Planning a Head

This is the lesson for students to practice with technical drawing materials and instruments.

Join our telegram channel
@aplusacademyy

1. Prepare standard size drawing papers and enough drawing equipments with drafting table at drawing room
2. Demonstrate the rules/points to take care for and maintain drawing instruments and materials.
3. Develop a skill to use triangles and T-square to construct vertical and horizontal lines.
4. Practice how to lay out a title block and run the diagonals to find the center of the drawing space.

Hints for Teaching

Ask students how misuse of drawing equipment can affect the outcome of drawings. Ask in what ways this could be dangerous, expensive, and time-consuming.

Discussion

1. Show by demonstrate the specific application of drawing instruments and help them to practice. In addition discuss the points to care for and maintain the accuracy and neatness of drawings.
2. Instructors should choose activities to support whichever system of teaching is used. Give activities 2.2 and 2.3 and also the project work to do in group from student textbook.
3. Make ready few examples they will use in class and have them practice.

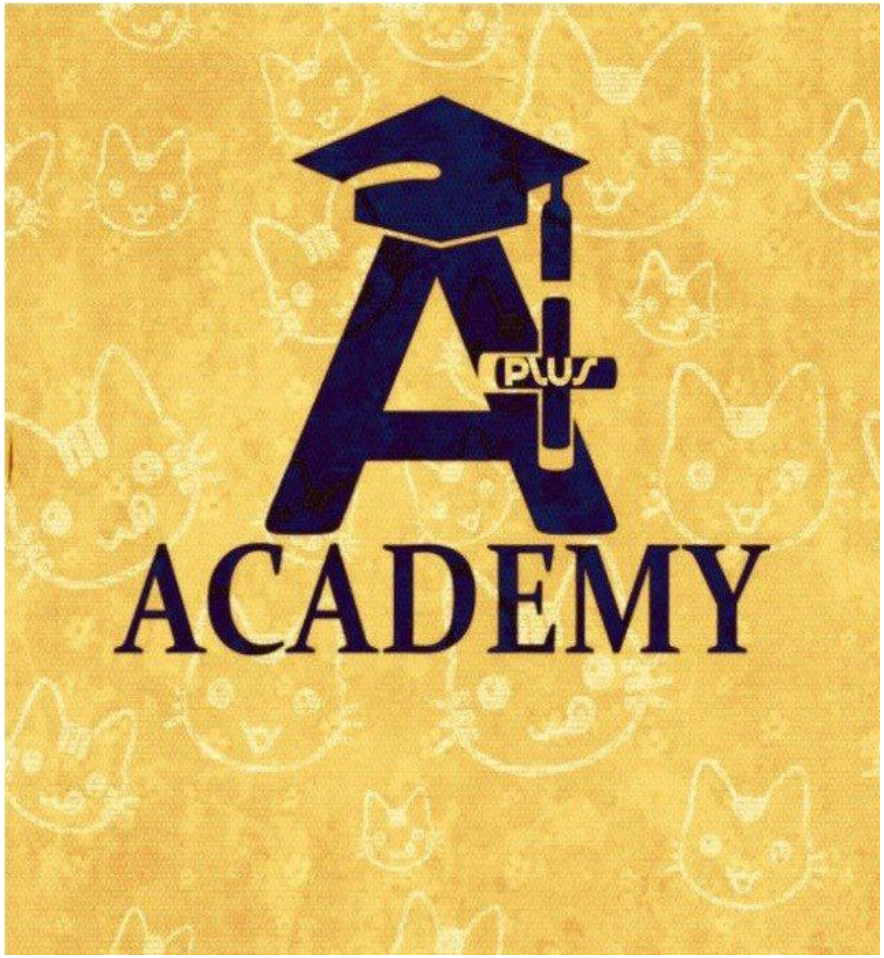

Teaching Note

In engineering drawing any object is represented by straight lines and/or curves. These lines should be drawn as accurate as possible by the help of drawing instruments. Quality of a drawing depends to a large extent on the quality, adjustment, proper use and care of drawing instruments.

Lesson Guide

Period	Lesson title	Starter activities	Main activities	Concluding activities
1	2.1 Selection of drawing materials and instruments	• Ask brain storming question to students the materials and instruments they know before class. In addition, For what purpose they use them.	• Give activity 2.1 for student to do in group) • Teacher demonstrates the use of equipment and drawing materials • Follow students when they do title block	• Summarize the lesson • Invite students to tell others what points they grasp from the
1	2.2 Application and care for basic technical drawing equipments	• Ask Students to tell the specific purpose they use for each type of instruments.	• Give activity 2.2 and 2.3 to do individual and in group • Discuss and demonstrate correct use, good working habits and how to take care of and maintain drawing equipment and materials.	• Students give feedback about today's lessons. • Give homework from the textbook and project work in group

Join our telegram channel
@aplusacademyy

Evaluation

Instructs your students to:

- select correct items for specific purpose from various drawing equipment displayed.
- state five reasons for observing good working habits.
- explain how to care for and maintain drawing instruments.
- use drawing equipment and materials correctly for drawing purpose.

Method

- Presentation,
- Demonstration
- Group discussion

Assessments

The teacher should follow and assess each student's work continuously over the whole activity of the lesson and compare it with the following description to determine whether the student has achieved the minimum required level.

Students working below the minimum requirement level will require extra help if they are to catch up with the rest of the class. They should be given extra attention in class and additional activities at the end of the lesson or during breaks.

Students working above the minimum requirement level should be praised and their achievements recognized. They should be encouraged to continue working hard and not become complacent.

Exercise

Fill in all the blank spaces.

1. The 45° and the 30°-60° triangles can be combined to form angles in increments of_____.
2. If you are right-handed, you should draw from _____.
3. Why? _____.
4. What is the fastest way to find the center of your drawing space? _____.
5. The instrument best used for transferring distances on a drawing is _____.
6. A _____ is an additional equipment used to achieve uniformity in drawing.
7. An _____ is made of thin metal. This equipment is used to protect nearby lines from being erased.
8. A _____ is used to ink drawing onto the tracing paper.
9. Curves can be constructed by adjusting lines on a_____.
10. _____ is made of flexible plastic material with lead backbone.
11. _____ are usually made of high quality transparent plastic. The edges of the squares contain measurement scales.
12. A _____ usually contains a drawing compass and a divider compass.
13. _____ has two main parts, the head and a long piece perpendicular to the head. It is usually used with the drawing board.

Quiz

Complete the crossword. Below are lists to see the clue or clues for those numbers in the box.

Down: 1: _____ can be constructed by adjusting lines on a French curve.

Down: 2: This equipment is used to protect nearby lines from being erased.

Across: 3: An equipment semi-circle in shape. It is used to measure angles.

Down: 4: A technical pen is used to _____ drawing onto the tracing paper.

Across: 5: Engineering drawing is made easier by the use of this equipment. its point is always sharp and are available in different sizes of 0.3 mm, 0.5 mm and 0.7 mm.

Down: 6: It is usually used to draw the accurate circles.

Across: 7: This is an additional equipment used to achieve uniformity in drawing.

Down: 8: A long stick which are made of wood or plastic. tt's usually used to measure the length of an object.

Across: 9: They are triangular in shape. One has 30° and 60° degree angles and while the other one has 45° degree angles.

Across: 10: It is used to stick the corners of the drawing paper to the drawing board.

Across: 11: It is soft in texture and can clean spots without damaging the drawing paper.

Across: 12: The place where setting up a drawing paper.

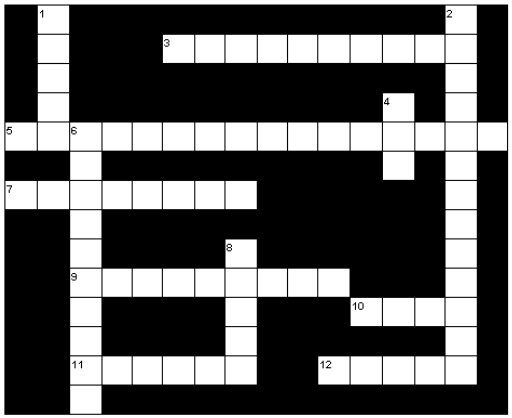

Answer to the Exercise

1. The 45° and the 30°-60° triangles can be combined to form angles in increments of 15 degrees.
2. If you are right-handed, you should draw from left to right.
3. Why? You won't be dragging your hand across the graphite.
4. What is the fastest way to find the center of your drawing space? Run the diagonals.
5. The instrument best used for transferring distances on a drawing is **dividers**.
6. A sampling template is additional equipment used to achieve uniformity in drawing.
7. An erasing shield is made of thin metal. This equipment is used to protect nearby lines from being erased.
8. A technical pen is used to ink drawing onto the tracing paper.
9. Curves can be constructed by adjusting lines on a French curve.

10. Flexible curve is made of flexible plastic material with lead backbone.
11. Set square are usually made of high quality transparent plastic. The edges of the squares contain measurement scales.
12. A compass set usually contains a drawing compass and a divider compass.
13. A T-square has two main parts, the head and a long piece perpendicular to the head. It is usually used with the drawing board.

Answer to the Quiz

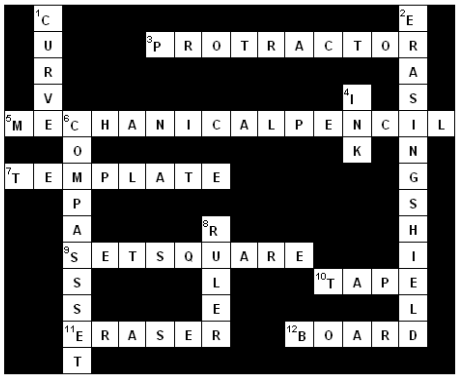

UNIT 3

ALPHABET OF LINES

Total Period: 1

Unit Outcomes

At the end of this unit, students should be able to:

- ✓ understand the types of lines according to their purpose, weight and thickness in drawing;
- ✓ Apply alphabet of lines for making proper working drawings.

Unit Overview

The Alphabet of lines is nothing but the different types of lines. In order to include all the necessary information on a drawing in a meaningful manner, different types and weights of lines are used to represent the features of the object. The meaning of a line with certain characteristics has been standardized, and will be the same on any drawing. These line conventions must be understood in order to read drawings.

Lesson 3.1 *Alphabet of lines.*

Number of Period: 1

Learning Competencies

At the end of this lesson, students should be able to:

- Identify and list the type of alphabet of lines.
- explain the purpose and weight of alphabet of lines.
- perform alphabet of lines in their weight and thickness.
- use alphabet of lines on proper drawings.

Planning ahead

You are about to educate students on eleven main types of line, you should therefore be able to do the following:

- Prepare diagram of alphabet of lines as a teaching aid.
- Collect architectural drawing, machine drawing and map drawing for display and students will learn the application of lines.
- Program to practice to draw the lines with various line weights on their exercise book and even on a black/white board.

Hints for Teaching

You can make your teaching interesting by using teaching aids like blueprint reading exercises. Alphabet of Lines such as Object Lines, Hidden Lines and Center Lines, and Extension Lines and Dimension Lines.

Discussion

1. Ask students the types of line they observed any type of blueprint like a building or a machine drawing.
2. Discuss and demonstrate by drawing the alphabet of lines used in technical drawing on black board. Have students take notes from the list.
3. Allow students to practice by drawing alphabet of lines with appropriate line weight and to do activity 3.1.

Teaching Note

Line weight is the thickness of the line. **Construction lines** and **guide lines** are very light, easily erased lines used to block in the main layout. **Visible lines** are the edges or "outlines" of an object. They are drawn as solid lines with a thick/heavy weight. All other lines contrast with the visible lines by having either a thinner weight and/or a combination of dashes.

Lesson Guide

Period	Lesson title	Starter activity	Main activities	Concluding activity
1	3.1 Alphabet of lines	• Ask brain storming question and discuss by listing the types of lines with their proper line weight.	• Give activity 3.1 to do in group from architectural drawings or machine drawings. • Illustrate and Discuss various applications of each type of line with students. • Assist students to draw different types of lines	• Students give feedback about today's lessons. (Teacher acts as facilitator.) • Give home work to do exercises from the textbook

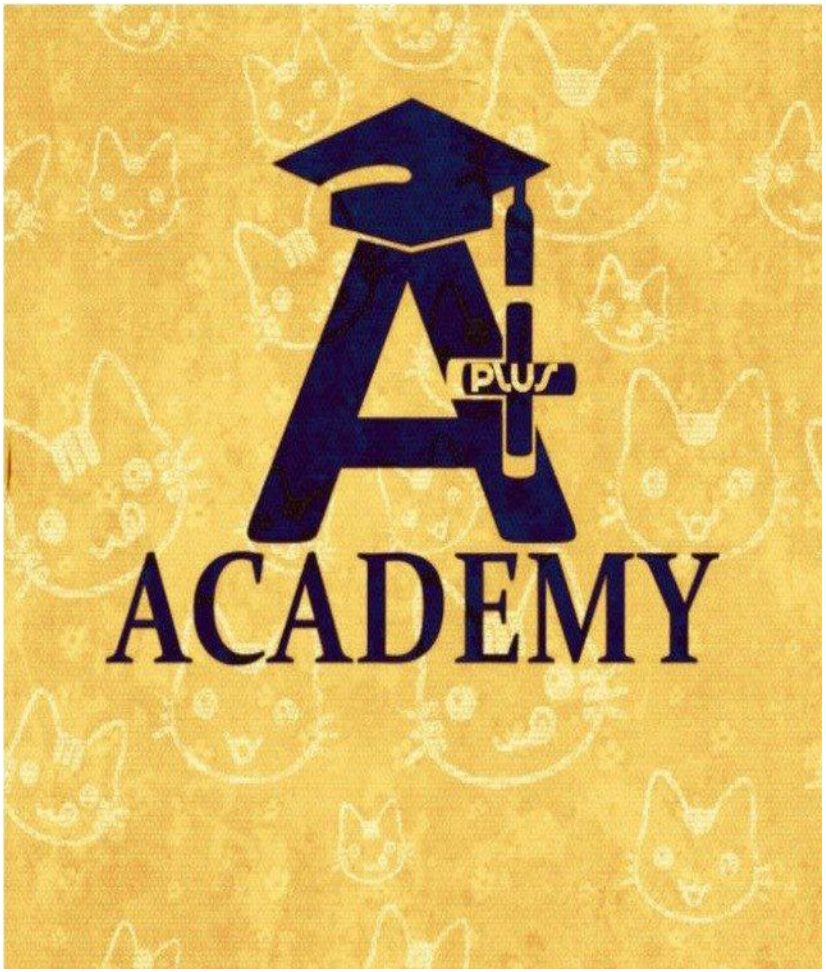

Evaluation

Instructs you student to:

- define and draw each type of line.
- state the application of each line.
- Identify the name of alphabet of lines from the given drawing.

Method

- Presentation,
- Demonstration
- Individual practice

Assessments

The teacher should follow and assess each student's work continuously over the whole activity of the lesson and compare it with the following description to determine whether the student has achieved the minimum required level.

Students working below the minimum requirement level will require extra help if they are to catch up with the rest of the class. They should be given extra attention in class and additional activities at the end of the lesson or during breaks.

Students working above the minimum requirement level should be praised and their achievements recognized. They should be encouraged to continue working hard and not become complacent.

Quiz

Label each line type in the drawing below within the guidelines.

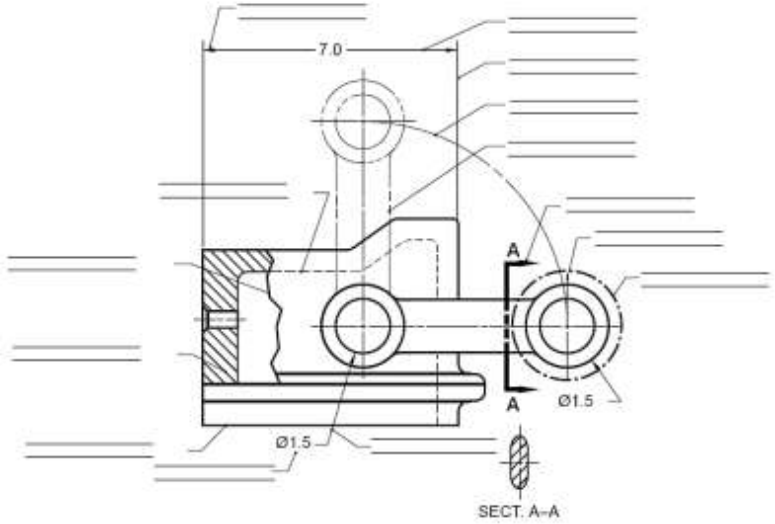

Answer to the Quiz

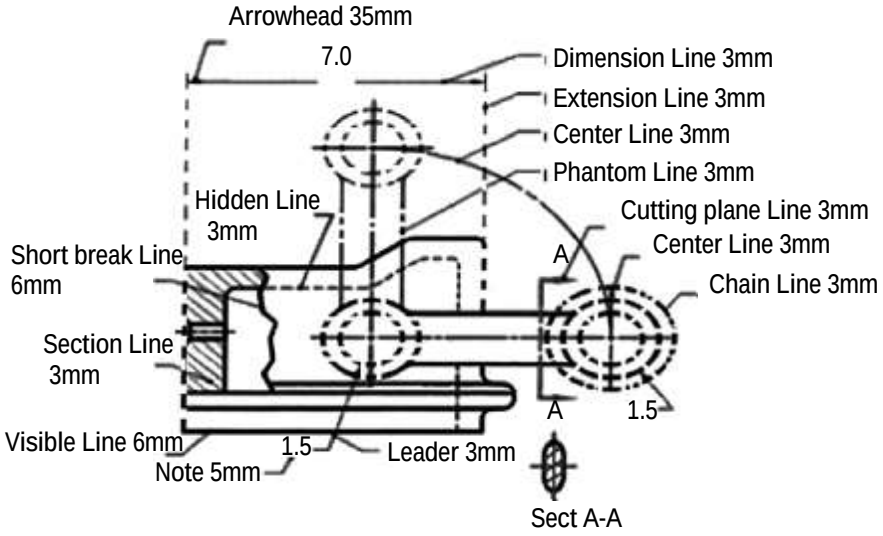

Answer for the question on the textbook exercise 3.1

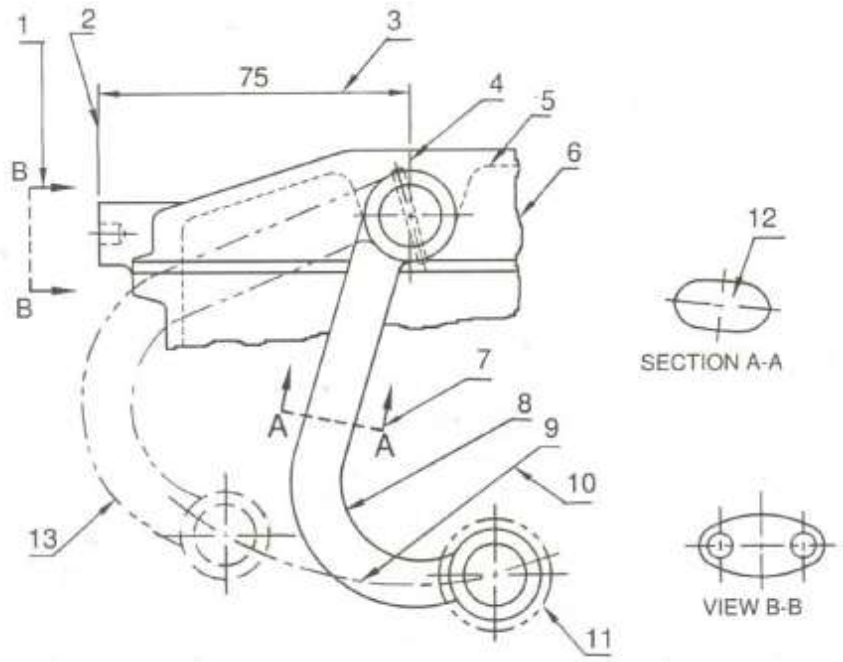

1. cutting plane line
2. extension line
3. dimension line
4. center line
5. hidden line
6. short break line
7. cutting plane line
8. visible line
9. center line
10. leader line
11. phantom line
12. center line
13. phantom line

UNIT 4

LETTERING

Total Periods: 2

Unit Outcomes

At the end of this unit, students should be able to:

- ✓ distinguish the different lettering styles and guide lines for letter writing;
- ✓ understand the rules and principles of lettering;
- ✓ Execute (draw) the common Technical drawing lettering styles.

Unit Overview

The information that a drawing must present cannot be revealed by graphic shapes and lines alone. To make a drawing informative and complete, you must include lettering in the form of dimensions, notes, legends, and titles. Lettering can either enhance your drawing by making it simple to interpret and pleasant to look at, or it can ruin your drawing by making it difficult to read and unsightly in appearance. Therefore, it is essential that you master the techniques and skills required for neat, legible lettering.

Lesson 4.1 *Techniques of lettering and single stroke letters*

Number of Period: 1

Learning competencies

At the end of this lesson, students should be able to:

- mention the role of lettering in technical drawing.
- identify the different four types of lettering styles.
- draw vertical and inclined single-stroke letters and numbers properly.
- make Technical lettering, Single-strokes letters properly;

Planning ahead

This lesson is to introduce the student to basic letter drawing skills through using traditional tools. Instructors should choose activities to support whichever system of teaching is used. Therefore understand technique of lettering and differentiate the styles of lettering.

1. Make ready the various diagrams to show lettering styles and techniques to draw free hand letters to display for the students.
2. Program the way and time allotment for providing the activities and how many students will be participate in a group work.

Hints for Teaching

Explain and demonstrate the types of lettering styles techniques to be considered. The directions of strokes is very important to develop the skill of free hand lettering.

Discussion

1. Ask students the purpose of applying letters in technical drawing.
2. Demonstrate the styles of letter and techniques to be considered in free hand lettering by using traditional (board) tools.
3. Instructors should choose activities to support whichever system of teaching is used. Give as activity 4.1 to practice from student textbook.
4. The left-hander does have a problem of developing a system of strokes that seems personally most suitable. The strokes shown on the text are for right-handers. The lefthander should experiment with each letter to find out which strokes are best. The habits of left-handers vary so much that it is futile to suggest a standard system of strokes for all lefthanders.

Teaching Note

When using ANSI lettering standards: use gothic text style vertical or inclined, use all capital letters, use 3mm for most text heights and use 6mm for the height space between lines of text by taking the text height and dividing by 2.

There are 2 kinds of letters in the alphabet: uppercase or capital letters and lowercase or small letters. Where lowercase letters are grouped into 3:

1. Ascenders – like b, d, f, h, k, l, and t.
2. Normals – like a, c, e, m, n, o … etc.
3. Descenders – like f, j, p, q and y.

Ascenders are lowercase letters whose parts reach the capline. Normals are lowercase letters whose parts are confined between the waistline and the baseline. Descenders are lowercase letters whose stem touches the dropline.

Study the drawing below, particularly the parts of each letter. The stem is the straight part of a letter, the lobe is the curved part of a letter and the swash is the inclined or diagonal part of a letter.

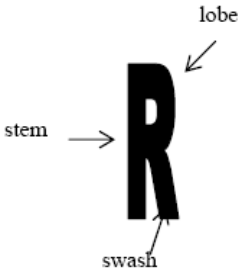

Lesson 4.2 *Guide line, uniformity, stability, and composition of lettering*

Number of Period: 1

Learning Competencies

At the end of the lesson, students will be able to:

- prepare guide lines properly for capital letters, lowercase letters, numerals and fractions;
- draw letters and numerals with proportional height and width;
- perform lettering exercises observing proper spacing.
- practice good working habits of Leroy lettering and lettering templates/guidelines.
- outline the uses of the Leroy lettering and lettering templates.
- develop all the techniques required to draw legible letters with proper proportion, spacing and composition.

Planning ahead

In this lesson guide lines, uniformity, stability and composition of lettering will be discussed. Therefore, you should be able to do the following:

- Prepare diagram to show advantage of guide lines in free hand lettering as a teaching aid.
- Collect architectural drawing, machine drawing and map drawing for display and students will learn the application of lettering.
- Program to practice to lay out letters in title block and fill out with letters..

Hints for Teaching

It is a first time for the students when learning technical lettering please make sure them to develop a skill of freehand lettering rather than using lettering devices. So, to make your teaching interesting by using teaching aids like blueprint.

Discussion

1. Ask students what is advantage of guide line and what are the points to be consider for keeping quality of free hand lettres.
2. Discuss and demonstrate about guidelines, stability, uniformity and composition of letters..
3. Allow students to do activity 4.2 and 4.3 from student textbook.

Teaching Note

Leroy Lettering Set are used in drafting and other roles where standard uniform characters are required, such as for title blocks and annotations, special notes on engineering drawings, or on photographs. The set typically consists of a set of Leroy templates, a scriber, and set of pens (see photo).

Lettering templates are an alternative to the Leroy Lettering approach, offering essentially the same kind of mechanical lettering but using a different guide (see picture from the text). The templates are offered in U.S. and metric sizes, usually corresponding to the technical pen line size they are designed to be used with, for example an 0.25 works with a .25 technical fountain pen. They work well with a straight edge, eliminating some of the steps required with the Leroy equipment.

Lesson Guide

Period	Lesson title	Starter activity	Main activity	Concluding activity
1	4.1 Techniques of lettering and single stroke letters	• Ask brain storming question to students the purpose of letter in drawing	• Discuss and demonstrate letter styles and strokes. • Give worksheets for students to practice lettering. • Allow to do activity 4.1	• Review terms as used and have students make a discussion. • Give home work to do exercises from the textbook
1	4.2 Guide lines, stability, uniformity & composition of lettering	• Review exercise to draw single stroke letters and ask questions about the topics	• Discuss and demonstrate about guide lines, stability, uniformity & composition of lettering. • Help students to do activity 4.2 and 4.3.	• Students give feedback about today's lessons. (Teacher acts as facilitator.) • Give exercises for students as a homework.

Evaluation

Instruct your students to:

- differentiate between Guide lines for capital and lower case letters.
- write upper and lower case letters correctly.
- write numbers 0-9 and fractions.
- Completing the exercises on time

Method

- Presentation,
- Demonstration,
- Group discussion.

Assessments

The teacher should follow and assess each student's work continuously over the whole activity of the lesson and compare it with the following description to determine whether the student has achieved the minimum required level.

Students working below the minimum requirement level will require extra help if they are to catch up with the rest of the class. They should be given extra attention in class and additional activities at the end of the lesson or during breaks.

Students working above the minimum requirement level should be praised and their achievements recognized. They should be encouraged to continue working hard and not become complacent.

Test

Match Column A with Column B. Write on your paper only the letters of the correct answers.

Column A	Column B
_____ 1. Lobe	a. simplest letter style
_____ 2. Roman	b. lines for uppercase
_____ 3. Cap-line	c. capital letters
_____ 4. Swash	d. straight part of a letter
_____ 5. Gothic	e. black letter
_____ 6. Stem	f. parent of all letter style
_____ 7. Text	g. small letters
_____ 8. Guidelines	h. inclined part of a letter
_____ 9. Ascenders	i. lowercase letter
	k. thin lines for lettering
	l. curved part of a letter



Answer key for the test

1. l 2. f 3. b 4. h 5. a 6. d 7. e 8. k 9. j 10. c

Lettering rubric

	Exception	Above Average	Average	Below Average	Unacceptable	Comments
Criteria	20-16	15-11	10-6	5-1	9	
Scale	$\frac{1}{4}$° guidelines with $\frac{1}{8}$° spaces	1-2 measurement errors	3-4 measurement errors	5-6 measurement errors	More than 6 measurement errors	
Spelling Accuracy	All words are spelled properly	1-2 spelling errors	3-4 spelling errors	5-6 spelling errors	More than 6 spelling errors	
Lettering Quality	Letters are dark, crisp, clear and readable	Lettering missing 1 elements	Average missing 2 elements	Below average only 1 element present	Letters are fuzzy light and unreadable	
Letter Width and Spacing Quality	Letters are equal width and spacing is appropriate to distinguish between words	Most letters are equal width and spacing is appropriate to distinguish between words	Some letters are equal width and spacing is somewhat appropriate to distinguish	Some letters are equal width or spacing is somewhat appropriate to distinguish	Letter width and spacing is unacceptable	
Guideline Quality	Lines are neat, light and unreadable from a 3° distance	Lines are neat but medium weight	Lines are neat but dark	Lines are neat but very dark	Unacceptable guidelines	

Answer for the question on the textbook exercise

1. What is the purpose of lettering in a drawing?

   To make a drawing informative and complete, by inserting letters in the form of dimensions, notes, legends, and titles. Also lettering can enhance your drawing by making it simple to interpret and pleasant to look at.

2. What are the different styles of letters to be used in drawing?
   - Gothic Letters
   - Italic Letters
   - Text Letters
   - Roman Letters

3. Identify ascending and descending lowercase letters.

   Strokes of the letters extending above the waist line are known as scenders (such as b, d, f, h, i, k, l, t,), and those extending below the base line as descenders (such as g, p, q, y).

4. Mention few techniques of letter you know.
   - proportions and forms of the letters and the order of the strokes
   - draw vertical strokes downward or toward you with a finger movement, and draw horizontal strokes from left to right with a wrist movement without turning the paper
   - the spacing of letters and words

5. What does the term Stability refers to in lettering?

   When the upper portions of certain letters and numerals are reduced in size where possible, thereby producing the effect of stability and a more pleasing appearance is called stablity of letter.

6. What are the four guidelines of lower case letters?
   i. Cap line
   ii. Waist line
   iii. Base line and
   iv. Drop line.
7. How do we maintain height and inclination uniformity of letters in a word?

   By drawing guidelines with constraction line
8. What are instruments used for drawing guidelines?
   - Braddock-Rowe lettering triangle
   - Ames Lettering Instrument

9. What are the lettering devices?
   - LeRoy Lettering and
   - Lettering Template/Guide

UNIT 5

GEOMETRIC CONSTRUCTION

Total Periods: 12

Unit Outcome

At the end of this unit, students should be able to:

- ✓ understand different types of plane geometry and their basic elements.
- ✓ construct different types of geometric figures.
- ✓ apply methods and rules of construction for different types of geometric shapes.

Unit Overview

Knowledge of the principles of geometric construction and its applications are essential to technical drawing students, because if you assume your students as a draftsman or engineer, they must be able to "construct" or draw any of the various types of lines. In a line drawing, a line may be a straight line, a circle, an arc of a circle or a fillet, a circular curve, a noncircular curve, or a combination of these basic types of lines.

The students must also be able to construct line drawings at specified angles to each other, various plane figures, and other graphic

representations consisting exclusively of lines. This unit provides information that will aid the students in drawing different types of geometric constructions.

Lesson 5.1 *Construction of Points, lines and angles*

Number of Period: 3

(1 period theory and 2 periods for practice)

Learning Competencies

At the end of this lesson, students should be able to:

- Explain different types of geometrical elements;
- construct different types of lines;
- perform steps of bisect and trisecting straight line;
- divide a line in to any number of equal parts without ruler;
- construct angles with different methods;
- perform steps of bisect and trisecting an angle;
- divide an angle in to any number of equal parts;
- transfer by coping angles for different places;

Planning ahead

Prepare the class equipping with materials used to construct geometric figures. Supply the class with drawings that show geometric constructions easily Make a further reading on points and lines too.

Teacher uses one period for theoretical concept and demonstration about the construction of lines and angles. Two periods for student practice on check points.

Hints for Teaching

The lesson main objective is help students to identify the principles of constructing geometric figures and develop skill the use drawing instruments.

Discussion

1. You can start the class by inviting students to explain what geometry is and use the textbook in text questions like what angles are and how they are formed.
2. Discuss and demonstrate by drawing the way of indicating a point, construction of lines and angles in technical drawing on black board. Have students take notes from the demonstration.
3. Allow students to practice on activities and check points 5.1 and 5.2.

Lesson 5.2 *Construction of Polygons*

Number of Period: 3

(1 period theory and 2 periods for practice)

Learning Competencies

At the end of the lesson, students will be able to:

- define polygon in their own words;
- differentiate regular and irregular polygons;
- construct triangles with different methods;
- define quadrilateral in their own words;
- construct different types of quadrilateral;
- draw regular polygons using their specific method;
- construct any type of regular polygon using general methods;

Planning a Head

Prepare the class equipping with materials used to construct geometric figures. Prepare different objects that can explain polygons with different sides. You can also use a chart showing different polygons with their respective names. Make a further reading on polygons too.

Teacher uses one period for theoretical concept and demonstration about the construction polygons. Two periods for student practice on check points.

Hints for Teaching

The lesson main objective is help students to identify the principles of constructing geometric figures and develop skill the use drawing instruments.

Show to students' objects or different polygons with different sides, and then.

Discussion

1. Start the lesson by asking students from the textbook.
2. Discuss and demonstrate by showing the method of construction of polygon on black board. Have students take notes from the demonstration.
3. Activate students to construct various types of triangles and other polygons from the textbook check points.

Lesson 5.3 *Construction of circles and tangents*

Number of Period: 3

(1 period theory and 2 periods for practice)

Learning Outcomes

At the end of this lesson, students should be able to:

- define circle in their own words;
- construct circles using three points in space;
- define tangency and tangent point;
- construct tangent line and tangent curves to join circles and arcs;
- apply different tangency concepts to real object drawing;

Planning ahead

Organize your class equipping with circular objects and other aids that can demonstrate circles and tangents.

Teacher uses one period for theoretical concept and demonstration about the construction of circle and tangents. Two periods for student practice on check points.

Hints for Teaching

The lesson main objective is help students to identify the principles of constructing geometric figures and develop skill the use drawing instruments.

Discussion

1. Start the lesson by asking students from the textbook about circle and tangents.
2. Discuss and demonstrate by showing the method of construction of circle and tangents on black board. Have students take notes from the demonstration.
3. Activate students to construct various types of circle and tangents from the textbook check points.

Lesson 5.4 *Construction of Ellipses*

Number of Periods: 3

(1 period theory and 2 periods for practice)

Learning Outcomes

At the end of this lesson, students should be able to:

- differentiate an Ellipse from other curved planes;
- construct an ellipse using different methods.

Planning ahead

Prepare different objects with elliptical shapes. You can also use drawings of different ellipses.

Teacher uses one period for theoretical concept and demonstration about the construction ellipse. Two periods for student practice on check points.

Hints for Teaching

The lesson main objective is help students to identify the principles of constructing geometric figures and develop skill the use drawing instruments.

Discussion

1. Start the lesson by asking students from the textbook about Ellipse and show objects with elliptical shape. Motivate students to compare and contrast ellipse with that of circle.
2. Discuss and demonstrate by showing the method of construction of ellipse on black board. Have students take notes from the demonstration.
3. Activate students to construct various types of ellipse from the textbook check points.

Lesson Guide

Periods	Lesson title	Starter activity	Main activities	Concluding activities
3	4.1 Construction of Points, lines and angles	• Ask students to illustrate the uses of construction of simple geometrical figures and shapes	• Demonstrate how to bisect a line, an angle and trisect a given line, how to divide a line into number of equal parts, and how to bisect lines and angles • Let the students to practice on activity 5.1 and check points 5.1 ,5.2& 5.3.	• Students give feedback about today's lessons. (Teacher acts as facilitator.) • Give home work to do exercises from the textbook
3	4.2 Construction of polygons	• Ask the in text question from the textbook about characteristics of polygon to students.	• Demonstrate construction of polygons and let students practice on check points 5.4, 5.5 &5.6	• Give home work to do exercises from the textbook

3	4.3 Construction of Circles and Tangents	• Ask the in text question from the textbook about circles and tangents. • Using charts, guide students to discuss the parts and properties of a circle and tangent and the relationships among them	• Demonstrate the different construction of circles and tangent • Let the students to practice on activity 5.2 and check points 5.7, 5.8 & 5.9 • Students to construct plane figures involving blending of lines and arcs such as spanners, anchors and openers.	• Students give feedback about today's lessons. (Teacher acts as facilitator.) • Give home work to do exercises from the textbook
3	4.4 Construction of Ellipse	• Assist students to define ellipse, and discuss its properties using chart.	• Demonstrate the different methods of construction Ellipse. • Let the students to practice on activity 5.3 and check points 5.10	• Students give feedback about today's lessons. (Teacher acts as facilitator.) • Give home work to do exercises from the textbook

Evaluation

Instruct your students to:

- trisect a given line with 60° set square correctly.
- construct specific given triangles.
- construct various types of angles.
- construct angles using scales of chord.
- trisect given angles correctly using drawing instruments.
- construct specific regular polygons.
- indicate point of contact on their drawn figures.
- explain the practical applications of tangency.
- explain the principles of blending of arcs.
- construct the ellipse using different methods.

Method

- Presentation (lecture)
- Demonstration
- Group discussion (6-8 students per a group)

Assessments

The teacher should follow and assess each student's work continuously over the whole activity of the each lesson and compare it with the following description to determine whether the student has achieved the minimum required level.

Students working below the minimum requirement level will require extra help if they are to catch up with the rest of the class. They should be given extra attention in class and additional activities at the end of the lesson or during breaks.

Students working above the minimum requirement level should be praised and their achievements recognized. They should be encouraged to continue working hard and not become complacent.

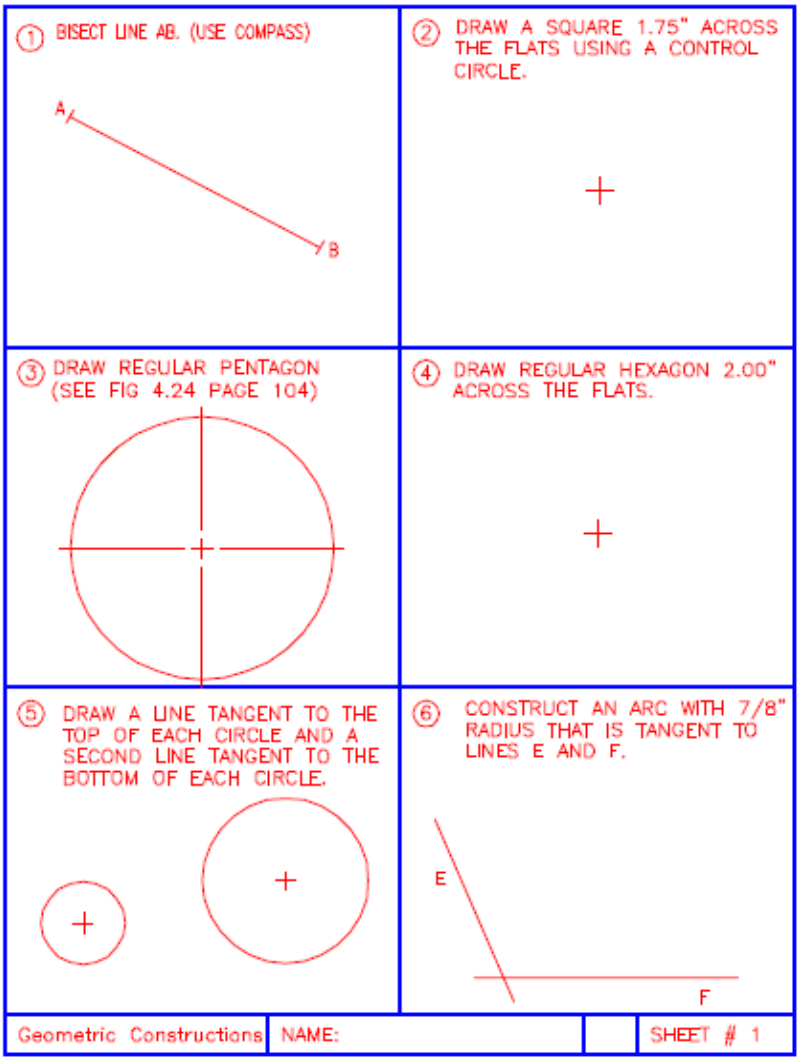
1 BISECT LINE AB. (USE COMPASS)
A
B
2 DRAW A SQUARE 1.75" ACROSS THE FLATS USING A CONTROL CIRCLE.
3 DRAW REGULAR PENTAGON (SEE FIG 4.24 PAGE 104)
4 DRAW REGULAR HEXAGON 2.00" ACROSS THE FLATS.
5 DRAW A LINE TANGENT TO THE TOP OF EACH CIRCLE AND A SECOND LINE TANGENT TO THE BOTTOM OF EACH CIRCLE.
6 CONSTRUCT AN ARC WITH 7/8" RADIUS THAT IS TANGENT TO LINES E AND F.
E
F
Geometric Constructions
NAME:
SHEET # 1

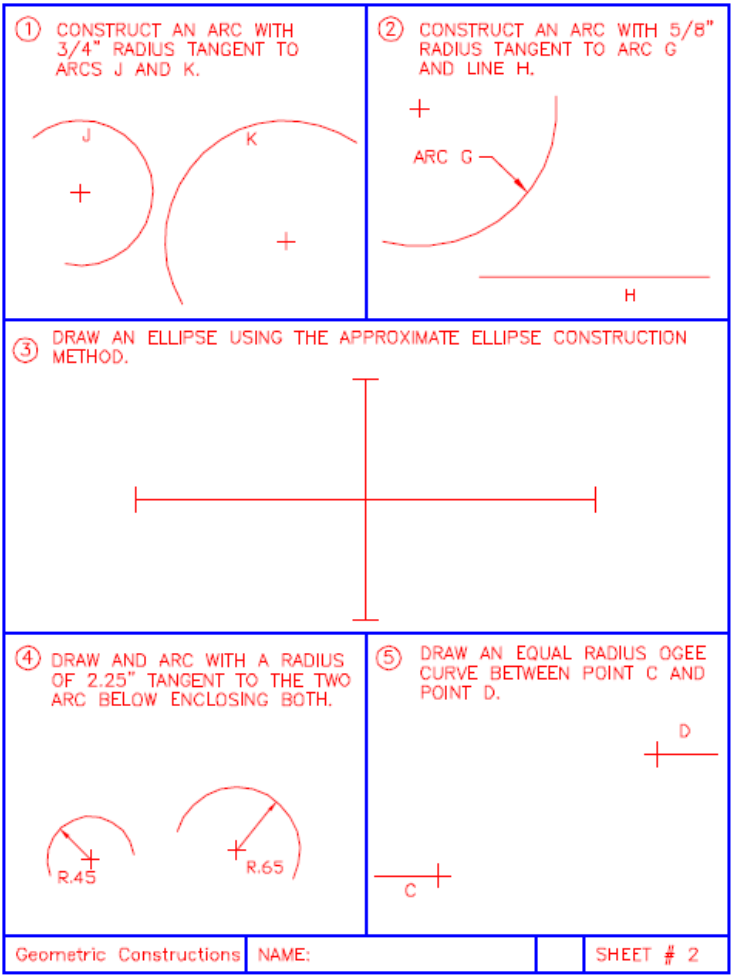
1 CONSTRUCT AN ARC WITH 3/4" RADIUS TANGENT TO ARCS J AND K.
J
K
2 CONSTRUCT AN ARC WITH 5/8" RADIUS TANGENT TO ARC G AND LINE H.
ARC G
H
3 DRAW AN ELLIPSE USING THE APPROXIMATE ELLIPSE CONSTRUCTION METHOD.
4 DRAW AND ARC WITH A RADIUS OF 2.25" TANGENT TO THE TWO ARC BELOW ENCLOSING BOTH.
R.45
R.65
5 DRAW AN EQUAL RADIUS OGEE CURVE BETWEEN POINT C AND POINT D.
D
C
Geometric Constructions
NAME:
SHEET # 2

UNIT 6

MULTI-VIEW DRAWING

Total Periods: 25

Unit Outcome

At the end of this unit, students should be able to:

- ✓ understand the basic principle of multi-view drawing;
- ✓ develop visualization skill to represent a 3D objects using the six principal views;
- ✓ appreciate the convention and principle of describing the shape of an object.

Unit Overview

The most fundamental method of presenting working drawings is to draw multiple views of the three dimensional object. In order to create these multi-view drawings drafters need to understand the basic principles of orthographic projection. Orthographic projection is the method by which 3D objects are projected onto two dimensional planes. Paper is a two dimensional medium and in order to print drawings on paper they are shown laying flat, and that is why multiple views are needed.

The basis for all drawing is the clear representation of the object through standard layouts of views to best fully describes the object. Multi-view drawings are the backbone of working drawings.

Lesson 6.1 *Introduction and types of projection*

Number of Periods: 3

Learning Competencies

At the end of this lesson, students should be able to:

- Explain the purpose of multi-view drawings;
- define the concept of projection.

Planning ahead

Prepare model and diagrams to show types of projection in class. You can also use a chart showing tree of projection. Make a further reading on types of projection too. The activities in this lesson are designed to give students a basic understanding about what orthographic projection drawings

Teacher uses one period for theoretical concept and demonstration about the construction polygons. Two periods for student practice on check points.

Hints for Teaching

The lesson concentrates on projection. .

Discussion

1. You can start the class by inviting students in text question about projection and multi-view drawing.

2. Discuss and demonstrate about types of projection and come to orthographic projection. Illustrate the theory of projection and let students discuss in group.
3. Have students take notes from the demonstration.
4. Allow students to practice on activity and check point 6.1.

Teaching Note

Engineering and technical graphics are dependent on projection methods. Two methods primarily used. The first is **parallel** when object positioned at infinity & viewed from multiple points on an imaginary line parallel to the object. The second is **Perspective** when object position at finite distance & viewed from a single point. Projection theory comprises of the principles used to graphically represent 3D objects on 2D media. It is based on 2 variables:

Line of Sight (LOS) is an imaginary ray of light between and observer's eye and an object. Parallel projection is when all LOS are parallel; whereas perspective is when all LOS start at a point. Plane of projection is an imaginary flat plane where the image created by LOS is projected.

Lesson 6.2 *Orthographic Projection*

Number of Periods: 7

(2 period theory and 5 periods for practice)

Learning Competencies

At the end of this lesson, students should be able to:

- Explain the concept orthographic projection;
- Identify the three main projection planes;

- Describe the methods of orthographic projection;
- Prepare arranged view with first angle projection;
- Prepare arranged view with 3rd angle projection;

Planning ahead

Prepare of objects and corresponding multi-view drawings. Examples might include rectangular boxes, books, or VHS tapes and Standard drawing equipment. Make a further reading on orthographic projection and multi-view drawing too.

Teacher uses two periods for theoretical concept and demonstration about orthographic projection and multi-view drawing. In addition five periods for student practice on activities and check points.

Hints for Teaching

Ask brain storming question from the textbook and explain the topic by showing examples of First and third angle projection. First, show the physical object (model) and compare it to actual drawings.

Select appropriate views for presentation. Show how an object can be turned to represent different views.

Have students take notes from the demonstration and allow students to practice on activity and check point 6.2.

Teaching Note

Explain in detail the following concept of orthographic projection.

- Projection of the features of the object is made by lines of sight that are perpendicular to the plane of projection.

- When a surface of the object is parallel to the plane of projection, the surface will appear in its true size and shape on the plane of projection.
- The object appears three-dimensional (width, height and depth) while the view on the plane of projection has only two dimensions (width and height).

Explain in detail the following concept of multi-view projection.

- Multi-view projection establishes views of an object projected upon two or more planes of projection.
- The result of multi-view projection is a multi-view drawing.
- A multi-view drawing represents the shape of an object using two or more views.
- Consideration should be given to choice and number of views used so that, when possible, the surfaces of the object are shown in their true size and shape.
- It is often easier for an individual to visualize a three-dimensional picture of an object than it is to visualize a two-dimensional drawing.
- Orthographic projection is any projection of the features of an object onto an imaginary plane called a plane of projection.

Lesson 6.3 *The Six principal View and Visualization*

Number of Periods: 10

(3 period theory and 7 periods for practice)

Learning Competencies

At the end of this lesson, students should be able to:

- Identify the six principal views;
- Arrange the six principal views in 1st and 3rd angle projection methods;
- Identify the common dimension of views;
- analyze guide lines for orientation of an object and choose of views that most describe of an object
- Laying out one-view, two view and three-view drawings;
- Prepare the multi view drawing of an object;
- show hidden features of an object;
- Apply the rule of precedence of line in view drawings.

Planning ahead

Prepare models of objects and corresponding multi-view drawings. Examples might include rectangular boxes, books, or VHS tapes and diagrams to show the six principal view, Standard drawing equipment and make a further reading on one and two view drawings too.

Teacher uses three periods for theoretical concept and demonstration about rules and conventions on multi-view drawing in the text. In addition seven periods for student practice on activities and check points.

Hints for Teaching

When you teach this lesson you can use the following instructional guide:

1. Ask the class if anyone knows what an orthographic projection drawing is. Hold a rectangular box in your hand. Ask the class how many sides there are to a box. List the different sides on the board (Top, bottom, right side, left side, front, and back). Ask them if any of the sides are duplicate views. Erase the bottom, right side, and back. Explain that the remaining three views are known as an orthographic projection drawing (Top, front, and right side). Distribute graph paper and rulers to each student.
2. Demonstrate by drawing basic object in orthographic projection on the board and have the students to draw it on their paper. Distribute any worksheets or activities that you found on the Internet or other resources.
3. Discuss some of the careers that would use orthographic projection drawings.
4. Have students take notes from the demonstration.
5. Allow students to practice on activity and check point 6.1.

Teaching Note

You will practice in the next unit different techniques for drawing objects so that they appear to have a three-dimensional quality. These techniques are excellent for quickly communicating ideas to both

technical and non-technical people. Those who make their living building ideas require a different type of drawing format. A multi-view sketch, also referred to as an orthographic projection sketch, is the standard sketch format used by engineers to communicate ideas to professionals in the building trades.

However, pictorials do not provide accurate information about the true size and shape of an object and all of its features. It is often the case that engineered objects have features and edges that are obscured by the standard surface views of a multi-view drawing. These views require hidden lines. When engineers create drawings of cylindrical objects, or objects that have holes, they must represent their axes and axes points with centerlines. Knowing how to draw and interpret multi-views is an important skill for any engineer.

What to do

In this activity, you will develop your ability to see and sketch objects as a series of related two-dimensional views. Understanding and using the different line conventions, discussed earlier, will help when creating these views.

Study the image below. The various surfaces of the object are identified by letters on the isometric drawing and by numbers on the multi-view drawing. In the table, write the number that corresponds with the lettered surface in each of the top, front, and right side views.

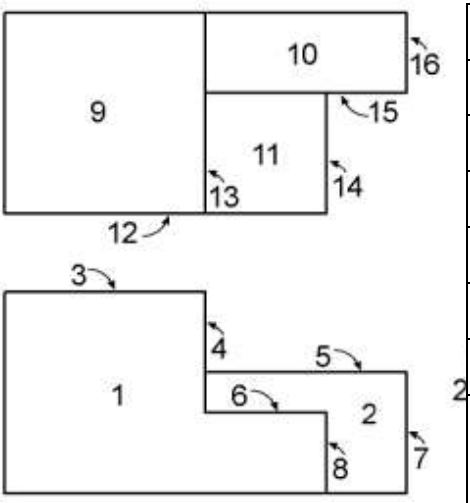

	Top	Front	Side
A	**9**	**3**	**21**
B			
C			
D			
E			
F			
G			
H			

Study the images below. Use points, construction lines, hidden lines, center lines and object lines where applicable to draw the items as multi-view drawings. DO NOT ERASE YOUR POINTS AND CONSTRUCTION LINES.

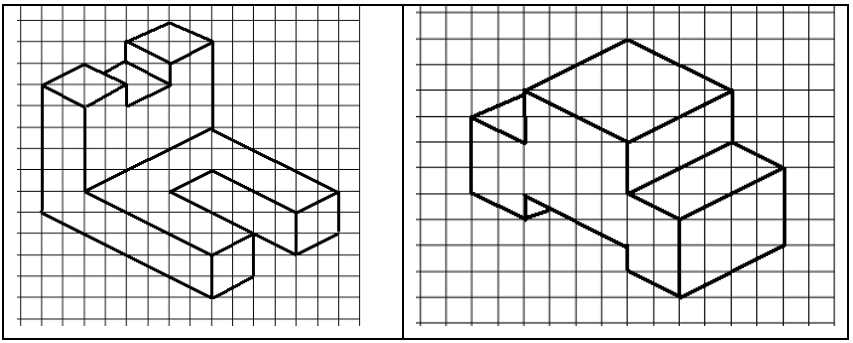

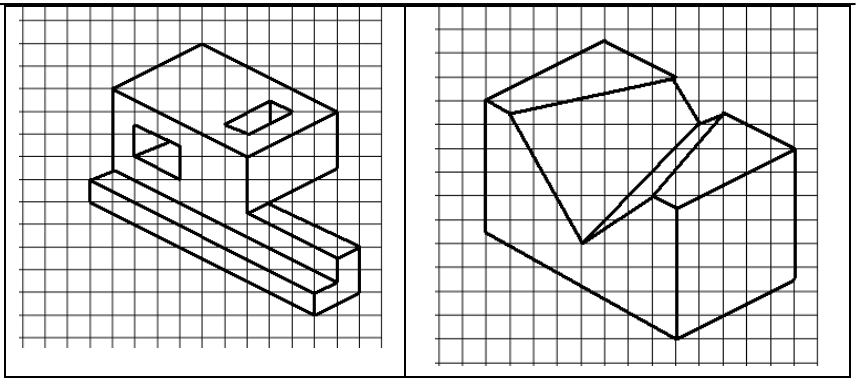

What did you learn?

1. Why would building professionals, such as machinists and contractors, prefer multi-view drawings over pictorial drawings?
2. How would you describe the geometric relationship that exists between the adjacent views of a multi-view drawing?
3. Why is it important to layout a multi-view sketch with points and construction lines before drawing object lines?
4. What is the purpose of hidden lines and center lines?

Lesson 6.4 *Fundamental view of edges & surfaces and visualization*

Number of Periods: 5

(1 period theory and 4 periods for practice)

Learning Competencies

At the end of this lesson, students should be able to:

- identify normal, inclined, and oblique surface;
- Apply visualization skills by solid and surface to multi-view drawings

Planning ahead

Prepare object for teaching aid and diagrams to show the normal, inclined and oblique surface and Standard drawing equipment and make a further reading on visualization too.

Teacher uses two periods for theoretical concept and demonstration about fundamental views of edge and surface in the text and the principles of developing visualization. In addition four periods for student practice on activities and check points.

Hints for Teaching

When you teach this lesson you can use the following discussion points:

Discussion

1. Start the lesson by asking students from the textbook about normal, inclined and oblique surface.
2. Discuss and demonstrate by showing the normal, inclined and oblique surface from the teaching aid or diagram and also on black board.
3. Discuss and demonstrate how visualization will be developed. Have students take notes from the demonstration.
4. Activate students to do activities 6.4 and 6.4 from the textbook on fundamental views of edge and surface and also visualization.

Teaching Note

Surfaces are classified as Normal, inclined and oblique. A normal surface is one that is parallel to a principal of projection. If a normal surface is parallel to any of plane of projection, it will be shown in its true size and shape. Inclined surfaces are surfaces which appear

perpendicular to only one of the three projection planes. When a plane surface is inclined to all the three principal planes of projection, it is known as oblique surface.

The ability to visualize can be developed by consistent practice. To improve visualization, the principle of orthographic projection can be applied to the following types of exercises:

1. Identification of surfaces
2. Missing line problems
3. Possible view problems
4. Missing or third view problems

Lesson Guide

Periods	Lesson title	Starter activity	Main activity	Concluding activity
3	6.1 Introduction and types of projection	• Ask brain storming question about projection and uses of multi-view drawings from the textbook.	• Discuss the ideas of design to solve problems and demonstrate the reasons for using multi-view projection and theory of projection. • Let the students to practice on activity 6.1.	• Students give feedback about today's lessons. (Teacher acts as facilitator.) • Give home work to do exercises from the textbook
7	6.2 orthographic projection	• Ask brain storming question about projection and uses of multi-view drawings from the textbook	• Discuss the ideas of orthographic projection and demonstrate the reasons for using first and third angle of projection. • Let the students to practice on check points 6.1.	• Students give feedback about today's lessons. (Teacher acts as facilitator.) • Give home work to do exercises from the textbook

10	6.3 the six principal projection.	• Askbrain storming question about individually to describe the differences and procedure for rotating an object to view it six different perspectives and have them demonstrate it using the step block.	• Demonstrate the differrent views and surfaces possible in an orthographic projection. • Use 3-D models to demonstrate the different views and surfaces possible in an orthographic projection. • Let the students to practice on activity & check points 6.2.	• Students give feedback about today's lessons. (Teacher acts as facilitator.) • Give home work to do exercises from the textbook
5	6.4 Fundamental views of edge and surface and visualization	• Ask brain storming question about fundamental views of edge and surface and the methods of developing visualization •	• Demonstrate the normal,inclined and oblique surface and method of visualization. • Let the students to practice on activities 6.3, 6.4 and 6.5 and check points 6.4, 6.5, and 6.6	• Students give feedback about today's lessons. (Teacher acts as facilitator.) • Give home work to do exercises from the textbook

Evaluation

Instruct your students to:

- state the use of multi-view projection.
- explain in brief the theory of projection and types of projection.
- explain the differences between first and third angle projections
- explain the principles of first and third angle projections.

Method

- Presentation,
- Demonstration
- Group discussion
- Individual practice

Assessments

The teacher should follow and assess each student's work continuously over the whole activity of the each lesson and compare it with the following description to determine whether the student has achieved the minimum required level.

Students working below the minimum requirement level will require extra help if they are to catch up with the rest of the class. They should be given extra attention in class and additional activities at the end of the lesson or during breaks.

Students working above the minimum requirement level should be praised and their achievements recognized. They should be encouraged to continue working hard and not become complacent.

Answer to the Exercises for textbook

Answer to check point 6.4

1. A-F	4. D-T	7. D-F	10. B-RS	13. B-F
2. E-F	5. E-LS	8. A-T	11. D-LS	14. E-T
3. C-LS	6. B-T	9. C-F	12. C-T	15. A-LS

Answer to check point 6.5

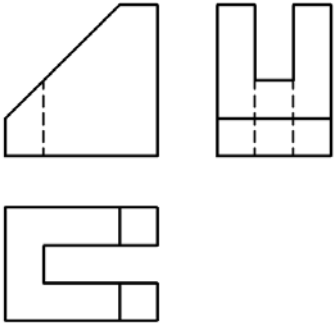

Answer to check point 6.6

A)

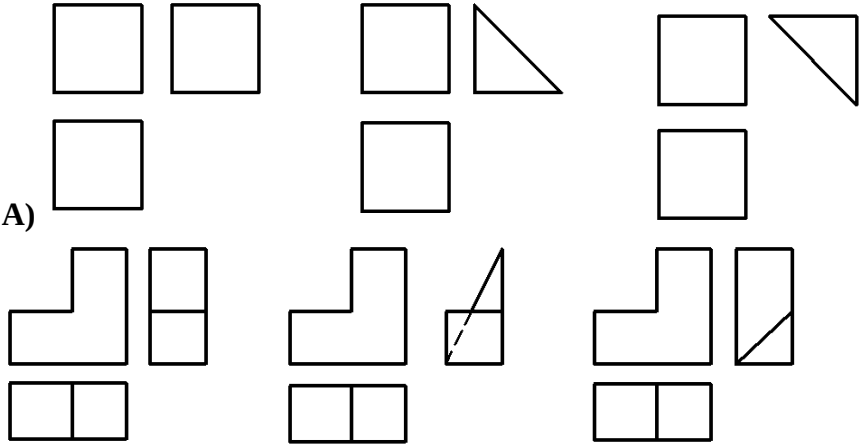

b)

Answer to exercise 6.7

B)

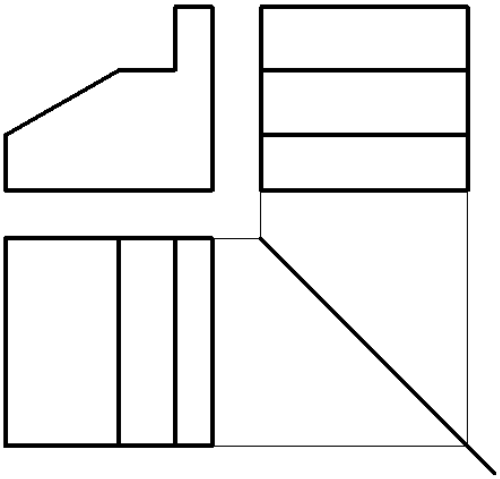

Solution for exercise 6.1

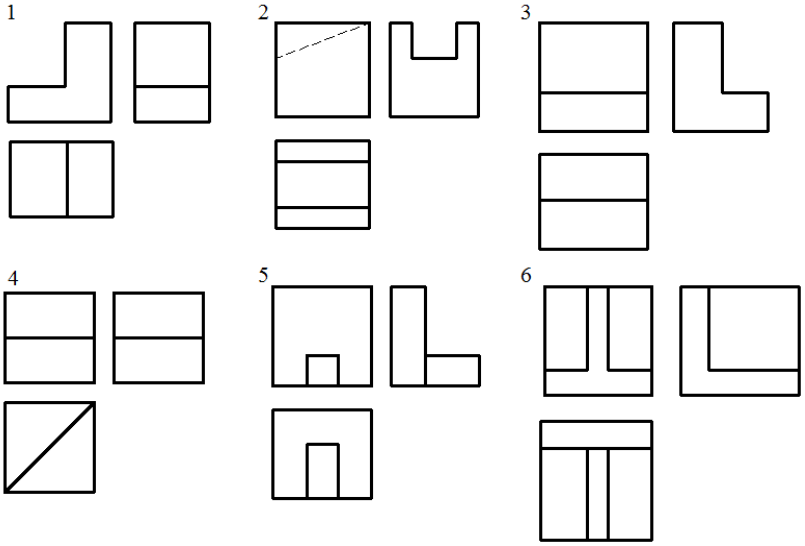

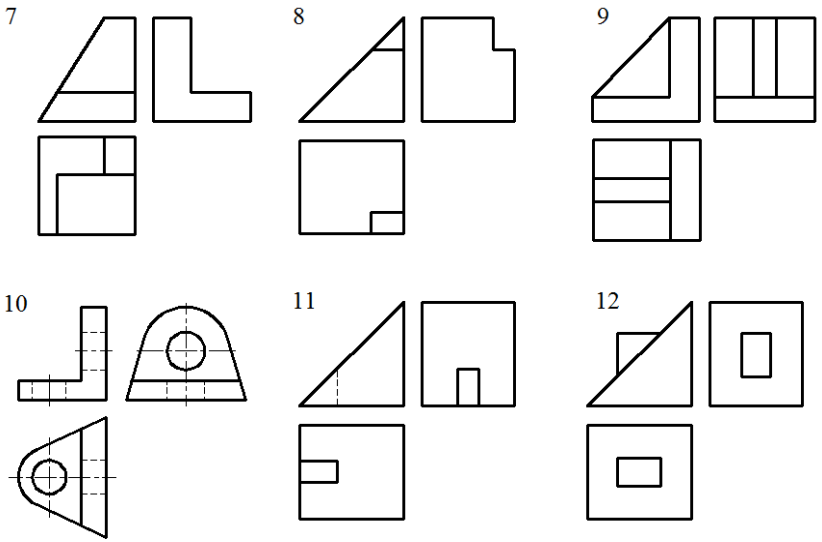

Solution for exercise 6.2

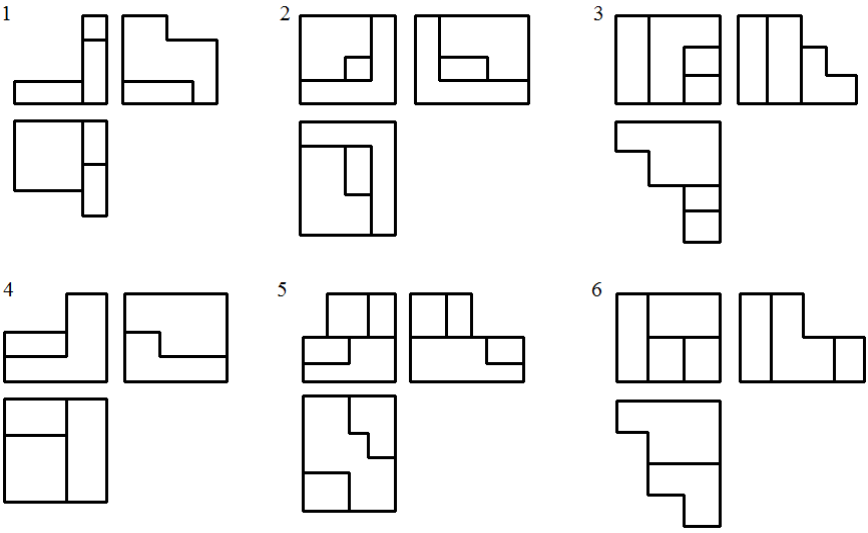

7

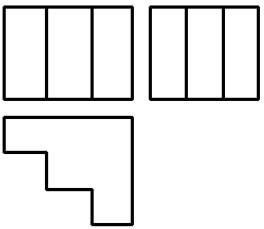

8

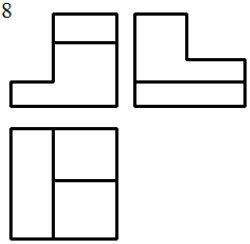

9

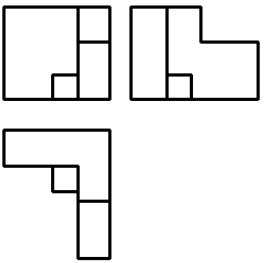

10

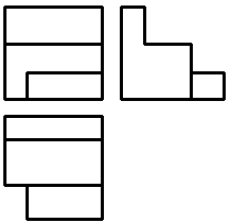

11

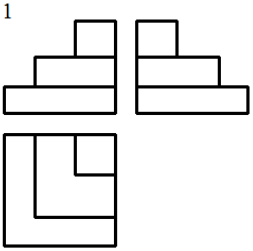

12

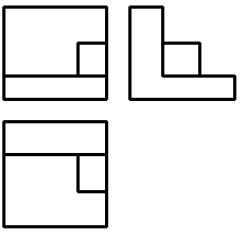

Solution for exercise 2

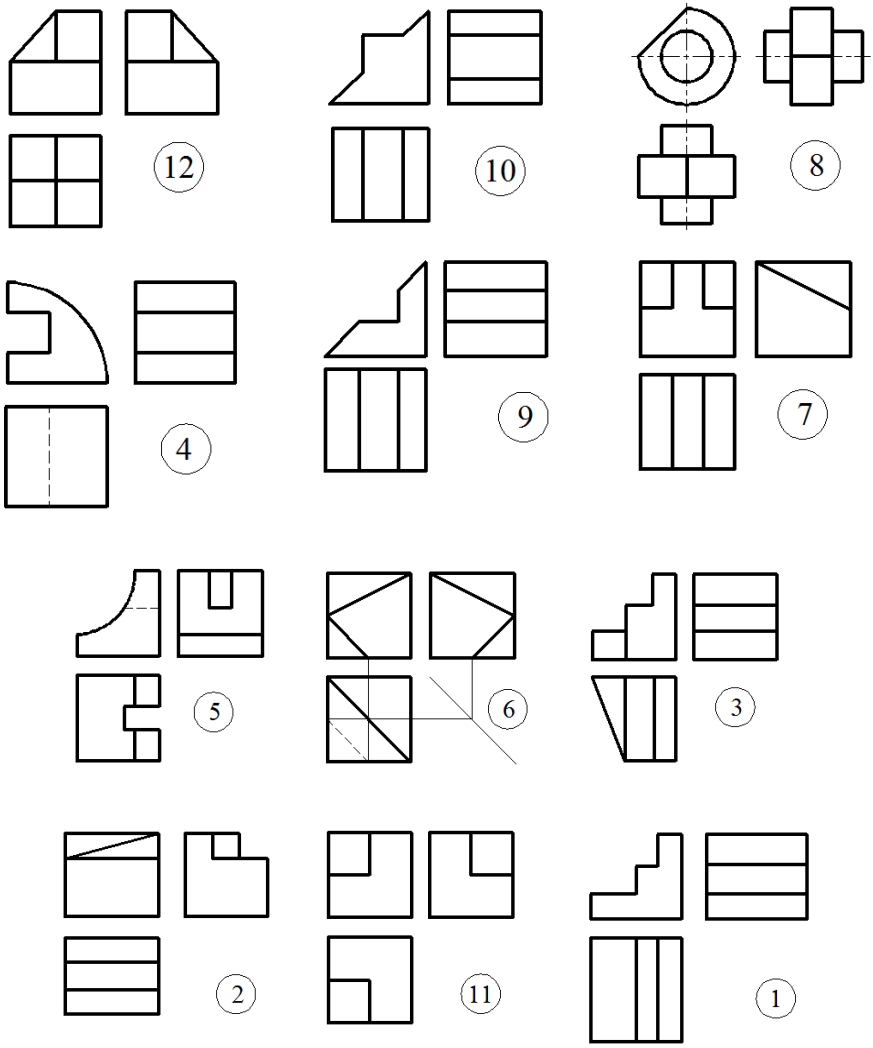

UNIT 7

PICTORIAL DRAWING

Total Period: 25

Unit Outcomes

At the end of this unit, students should be able to:

- ✓ Understand the basic principle of pictorial drawing;
- ✓ Recognize the different types of projection and the three types of pictorial drawing;
- ✓ Apply the principle of Axonometric, Oblique and perspective projection in describing 3D objects;
- ✓ Appreciate the importance of pictorial drawing to describe the shape of structures in today's world.

Unit Overview

There are four common types of drawings that you need to learn. During Graphic Communications, you will be expected to use three of these four types. Of these four drawing types, Isometric, Oblique, and Perspective are called **Pictorial Drawings.** They are used to convey general shape and structure of an object. They are much easier for people who do not have a background reading blueprints and multi-view drawings to comprehend.

For specific size information, multi-view drawings are heavily relied on and are the most common technical choice.

General comments about pictorial drawings:

Construction of drawings should proceed in this order:

1. Create a box of construction (very light) lines along the principal axes which enclose the entire overall form and general shape of the body.
2. Next add other construction lines along principal axes to locate features of the body (usually edges of planes and surfaces).
3. Use offset dimensions to locate lines which don't follow the principle axes and lightly construct them.
4. Locate the center of circular features, and make construction boxes for creating the arcs.
5. Darken in the final lines starting with
    a. Circles and Arcs
    b. Straight Lines (starting from the front of the object)
6. Construction lines need not be erased if they're drawn very lightly.
7. Final lines should be dark, sharp, and consistent in width.
8. Do not show hidden lines in pictorial drawings.
9. Do not show center lines in pictorial drawings.

Lesson 7.1 *Introduction & Types of pictorial drawing*

Number of Period: 2

Learning Competencies

At the end of this lesson, students should be able to:

- describe the concept of projection and its constituting element;
- identify the different types of pictorial drawing.

Planning ahead

This unit is to introduce students to the language of technical drawing. Through demonstration, handouts and, the students will learn the beginning standards for technical drawing.

1. Prepare visual aids to show "examples of drawings drawn by hand and CAD"
2. Prepare to make a review of a projection and the different ways of projection to understand the types of pictorial projection.

Hints for Teaching

1. Allow your students to survey the types of pictorial drawing, giving each one a try.
2. For all the lessons, list new vocabulary discussed each day and review at end of class and begin the next day class with review of the terms.

Discussion

1. Demonstrate by showing the difference in orthographic and pictorials. Give definitions and have students list in notes. Show PPT "Technical Sketching" and/or PPT "Sketching."

2. Sketch a person as a pictorial and then a person as an orthographic. Do the same thing with a common object such as a chair. Explain what determines whether orthographics or pictorials are to be used.
3. Explain the three dimensions. Ask which dimension (width, depth, and height) would show on the sketch of the person.
4. Let the student to do activities 7.1 &7.2 and check point 7.1

Teaching Note

Projection defined as the representation of an object on a picture planes as it would appear to an observer stationary at a point and viewing along the direction of projection. a plane of projection or picture plane on which the projection is made. Projection can be categorized into two broad groups namely: *central* or *perspective projection* and *parallel projection*.

Pictorial drawing is a means by which the three principal faces and dimensions of an object are represented on a single 2D projection plane (sheet of paper). Pictorial drawing is divided into three classifications:

i. Axonometric projection,
ii. Oblique projection, and
iii. Perspective or central projection.

Lesson 7.2 *Axonometric Projection*

Number of Periods: 14

(3 period theory and 10 periods for practice)

Learning Competencies

At the end of this lesson, students should be able to:

- Define the principle of axonometric projection;
- Identify the types of axonometric projection;
- Choose appropriate position of isometric axis to describe the shape of an object;
- Identify isometric and non isometric lines;
- Identify the procedure of constructing angles are located in isometric drawing;
- Draw circles, arcs and irregular curves in isometric;
- Apply offset location measurement in isometric drawing;
- Prepare the isometric drawing using box method and center line layout method;
- Perform Isometric drawing of an object with its principle;

Planning ahead

This unit is to introduce students to the language of technical drawing. Through demonstration, handouts and, the students will learn the beginning standards for technical drawing.

1. Prepare visual aids or models to show "examples of types of axonometric projection drawn by hand and CAD"

2. Make a further reading on axonometric projection too.
3. Teacher uses three periods for theoretical concept and demonstration about Axonometric projection and Isometric drawing specially. In addition ten periods for student practice on activities and check points.

Hints for Teaching

When you teach this lesson you can use the following discussion points:

Discussion

1. Start the lesson by asking students from the textbook about Axonometric projection.
2. Discuss and demonstrate by showing the types of Axonometric projection from the teaching aid or diagram and also on black board.
3. Discuss and demonstrate how principles of constructing isometric drawing. Have students take notes from the demonstration.
4. Activate students to do activities 7.3 and 7.4 and check points 7.3 &7.4 from the textbook on isometric drawing and the principle of construction.

Teaching Note

How do reading the face of a clock and sketching isometric pictorials relate to each other? Picture a cube in your mind. All of the surfaces of the cube form right angles with their adjacent faces. If you were to draw an isometric pictorial of the cube, you would see that the edges point toward 2 and 10 o'clock, and 12 o'clock. This idea helps when sketching

isometric pictorials on writing surfaces that do not have isometric grids so tell the students this idea.

What to do

In this activity, you will develop your isometric sketching skills by drawing views of objects that are already given in an isometric orientation. You will then apply your sketching skills throughout the remainder of the course.

Before you begin, you must understand how an isometric view is called out. The image below represents a top, front, right side view isometric. The order is first face, second face, then third face.

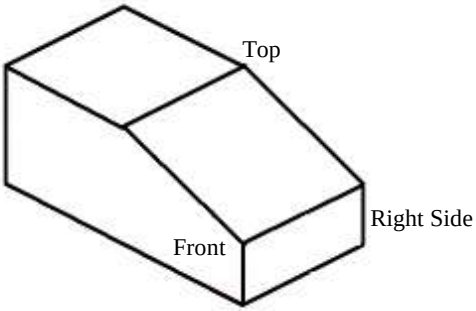

In your Engineering Notebook, complete the isometric pictorial of the object pictured below. Use points and construction lines to layout the isometric sketches. DO NOT ERASE YOUR POINTS AND CONSTRUCTION LINES. To construct the box, first draw the front vertical corner. Next to approximate the angle to show the front and right side views count over two blocks up one. Continue to do this until you sketch the width and depth of the box.

In your Engineering Notebook, complete the isometric pictorial of the object pictured below. Use points and construction lines to layout the isometric sketches. DO NOT ERASE YOUR POINTS AND CONSTRUCTION LINES. To construct the box, first draw the front vertical corner. Next to approximate the angle to show the front and right side views count over two blocks up one. Continue to do this until you sketch the width and depth of the box.

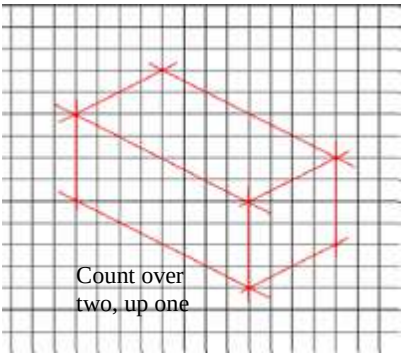

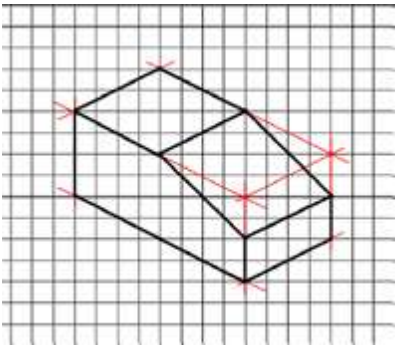

In your Engineering Notebook, make isometric sketches of the three objects pictured below. Sketch the objects in the same orientation that they are pictured in. Use points and construction lines to layout the isometric sketches. Then, delineate the visible edges of each sketch with object lines to make them stand out. DO NOT ERASE YOUR POINTS AND CONSTRUCTION LINES. Add tonal shading to the sketches when finished.

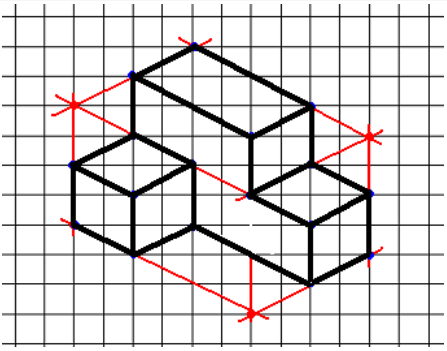

Study the isometric objects below. Recreate the three objects for practice. Add tonal shading to the sketches when finished.

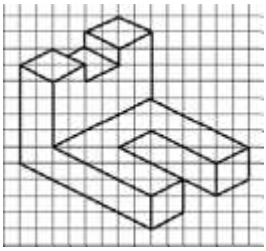

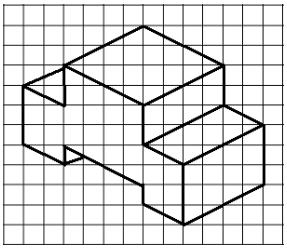

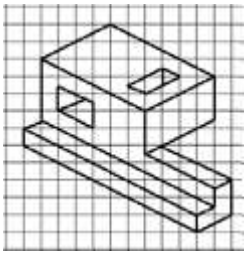

What did you learn?

1. What are the three common sides that are shown with an isometric sketch?
2. Why do designers use tonal shading on their sketches?
3. Describe the technique you used to approximate the proper isometric angles in order to complete an isometric sketch?

Lesson 7.3 *Oblique projection*

Number of Periods: 5

(1 period theory and 4 periods for practice)

Learning Competencies

At the end of this lesson, students should be able to:

- Describe the principle of oblique projection;
- Identify the types of oblique drawing;
- Identify the axis and position of objects in oblique drawing;
- Apply method of construction of oblique drawing;
- Draw circle and arcs in oblique drawing;
- Perform Oblique drawing of an object with its principle;

Planning ahead

This unit is to introduce students to the language of technical drawing. Through demonstration, handouts and, the students will learn the beginning standards for technical drawing.

1. Prepare visual aids or models to show "examples of types of axonometric projection called Oblique drawing drawn by hand and CAD"
2. Make a further reading on oblique drawing too.
3. Teacher uses one period for theoretical concept and demonstration about type of Axonometric projection called oblique drawing specially. In addition four periods for student practice on activities and check points.

Hints for Teaching

When you teach this lesson you can use the following discussion points:

Discussion

1. Start the lesson by asking students from the textbook about oblique drawing.
2. Discuss and demonstrate by showing the types of Axonometric projection called oblique drawing by using the teaching aid or diagram and also on black board.
3. Discuss and demonstrate about the principles of constructing oblique drawing. Have students take notes from the demonstration.
4. Activate students to do check points 7.5, 7.6 &7.7 from the textbook on oblique drawing and its principle of construction.

Teaching notes

Have you ever tried to tell someone what an object looks like by using words and hand gestures? It usually does not work very well, especially if the person does not understand the vocabulary you use.

In Engineering Design it is often the case that an idea will need to be communicated and explained quickly. Questions, such as "What does the idea look like? How will it work?" In most cases, words and hand gestures alone cannot answer these questions. Sketching is a quick and efficient method that is used in all fields of engineering to get ideas down before they are lost. If the idea turns out to be a possible solution, the sketch will serve as the basis for more advanced drawings and conveying ideas, such as Computer-Aided Design (CAD) solid-modeling.

What to do

In this activity, you will practice your sketching and technical communication skills by creating *general oblique sketches* of objects in your Engineering Notebook. A general oblique sketch has lines that can be drawn at any scale and any angle. The most common angles are 30, 45 and 60 degrees, but any angle can be used.

Study the figures below.

- Use points and construction lines to layout a general oblique sketch of the object on the large grid.
- Remember that one unit distance in the figure is equal to one unit distance on the large grid.
- Show the object in a top, front, right side view orientation in your general oblique sketch.
- Delineate the visible edges of the sketch with object lines.
- DO NOT ERASE YOUR POINTS AND CONSTRUCTION LINES.
- Add tonal shading to the sketch when finished.

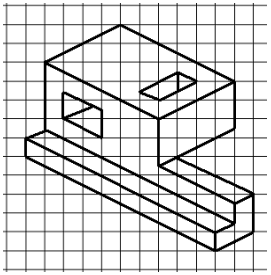

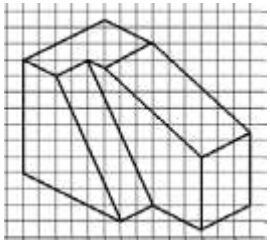

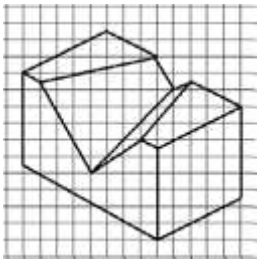

What did you learn?

1. Why practice sketching shapes when a Computer-Aided Design (CAD) program can produce much more accurate Geometry?
2. What pencil techniques are used to create the differences between construction lines and object lines?
3. What are the differences between oblique sketches and isometric sketches?

Lesson 7.4 *Perspective Projection*

Number of Periods: 5

(1 period theory and 4 periods for practice)

Learning Competencies

At the end of this lesson, students should be able to:

- Explain the terms of perspective drawings;
- Identify the best location of station point, picture plane and vanishing point,
- Show the location of ground line and Horizon line;
- Identify the three types of perspective drawing;
- Apply the procedure of construction of objects in perspective;
- Draw circles and arcs in perspective drawing;
- Perform perspective drawings with its principle.

Planning ahead

This unit is to introduce students to the language of technical drawing. Through demonstration, handouts and, the students will learn the beginning standards for technical drawing.

1. Prepare visual aids or models to show "examples of types of axonometric projection called Perspective drawing drawn by hand and CAD"
2. Make a further reading on perspective drawing too.
3. Teacher uses one period for theoretical concept and demonstration about type of Axonometric projection called perspective oblique drawing specially. In addition four periods for student practice on activities and check points.

Hints for Teaching

When you teach this lesson you can use the following discussion points:

Discussion

1. Start the lesson by asking students from the textbook about Perspective drawing and its three types.
2. Discuss and demonstrate by showing the types of Axonometric projection called perspective drawing by using the teaching aid or diagram and also on black board.
3. Discuss and demonstrate about the types of perspective and principles of constructing perspective drawing. Have students take notes from the demonstration.
4. Activate students to do check points 7.8 from the textbook on perspective drawing and its principle of construction.

Teaching Note

If you can stand on a straight road and look down the road, it appears to you the sides of the road begin to look as if they are narrowing to one point and the center of the road vanishes when the road meets the horizon. If the road is straight enough and long enough, the sides of the road not only look like they are converging to a single point, but the road seems to appear to vanish as it meets the horizon. A similar effect happens if you stare upward from the base of a tall building. The vertical edges of the building will appear to angle in toward each other. This effect is called perspective.

The human eye sees the world in perspective. Objects that are further away from the eye appear smaller, and edges appear to recede into the distance. Perspective sketches depict objects in much the same way that the human eye sees the world.

There are three different types of perspective drawings: one-point, two-point, and three-point perspective. The different types of sketches are frequently used by architects, industrial designers, and illustrators when representing large scale objects or environments in which the effect of distance must be taken into consideration.

Procedure

In this activity, you will practice your sketching skills by generating a one-point, two-point, and three-point perspective of a given object. You will then apply your skills by creating either a one-point, two-point, or three-point perspective of an object you randomly choose.

Study the objects in Figures 1 and 2. Use lightly drawn points and construction lines to layout a one-point perspective sketch of the object within the given box. **The perspective sketch must show the object in a top, left side, front view orientation.** Delineate the visible edges of the sketch with object lines. DO NOT ERASE YOUR POINTS AND CONSTRUCTION LINES. Add tonal shading to the sketch when finished.

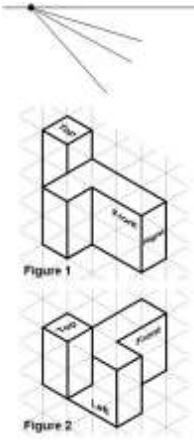

Study the objects in Figures 3 and 4. Use lightly drawn points and construction lines to layout a two-point perspective sketch of the object within the given box. **The perspective sketch must show the object in a top, front, right side view orientation.** Delineate the visible edges of the sketch with object lines. DO NOT ERASE YOUR POINTS AND CONSTRUCTION LINES. Add tonal shading to the sketch when finished.

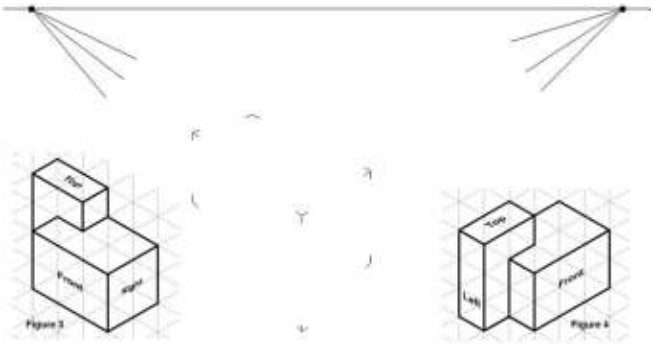

Study the pictorial in Figure 5. Use lightly drawn points and construction lines to layout a three-point perspective sketch of the object within the given box. **The perspective sketch must show the object in a top, front, right side view orientation.** Delineate the visible edges of the sketch with object lines. DO NOT ERASE YOUR POINTS AND CONSTRUCTION LINES. Add tonal shading to the sketch when finished.

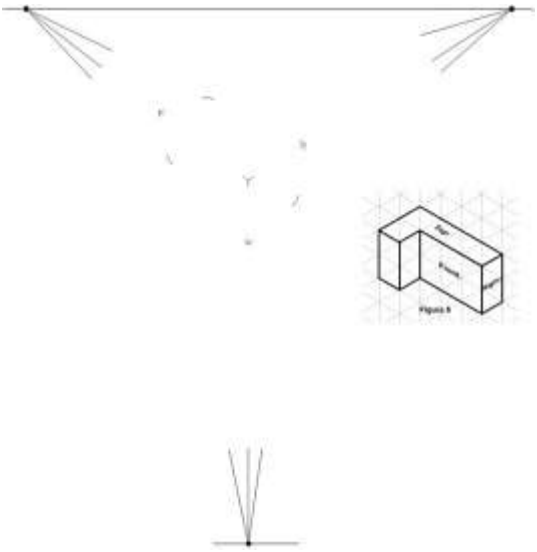

Lesson Guide

Period	Lesson title	Starter activity	Main activity	Concluding activity
2	1.1 Introduction and types of pictorial drawing	• Ask brain storming question about projection and types of pictorial drawing from the textbook	• Discuss and demonstrate the types of pictorial projection • Let the students to practice on activities 7.1 &7.2 and check points 7.1.	• Students give feedback about today's lessons. (Teacher acts as facilitator.) • Give home work to do exercises from the textbook
13	1.2 Axonometric drawing	• Ask brain storming question about the type of axonometric projection called isometric drawings from the textbook	• Illustrate how to apply the principles to draw objects in isometric • Let the students to practice on activities 7.3 & 7.4 and check points 7.3 and 7.4.	• Students give feedback about today's lessons. (Teacher acts as facilitator.) • Give home work to do exercises from the textbook
5	1.3 Oblique drawing	• Ask brain storming question about oblique and the type of Oblique drawings from the textbook	• Discuss and demonstrate where and how to apply the principles to draw objects in oblique • Let the students to practice on check points 7.5,7.6 and 7.7.	• Students give feedback about today's lessons. (Teacher acts as facilitator.) • Give home work to do exercises from the textbook
5	1.4 Perspective drawing	• Ask brain storming question about perspective and the type of perspective drawings from the textbook	• Discuss and demonstrate where and how to apply the principles of construction of perspective drawing. • Let the students to practice on check 7.8	• Students give feedback about today's lessons. (Teacher acts as facilitator.) • Give home work to do exercises from the book

Evaluation

Instruct your students to:

- Identify the use of orthographic projection and pictorial drawing in working drawings.
- state differences in the application of orthographic projection and pictorial drawing in working drawings.
- Draw isometric, oblique and perspective drawing

Method

- Presentation (lecture)
- Demonstration
- Group discussion (6-8 students per a group)

Assessments

The teacher should follow and assess each student's work continuously over the whole activity of the each lesson and compare it with the following description to determine whether the student has achieved the minimum required level.

Students working below the minimum requirement level will require extra help if they are to catch up with the rest of the class. They should be given extra attention in class and additional activities at the end of the lesson or during breaks.

Students working above the minimum requirement level should be praised and their achievements recognized. They should be encouraged to continue working hard and not become complacent.

Pictorials Quiz I

Name _____

Use either inclined or vertical lettering to fill in the blanks.

Label each type of drawing in the blanks below.

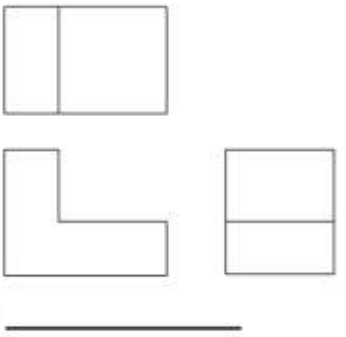

1 _____

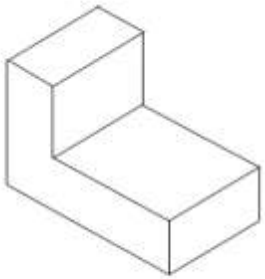

2 _____

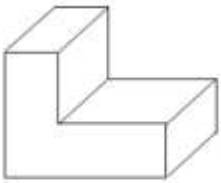

3 _____

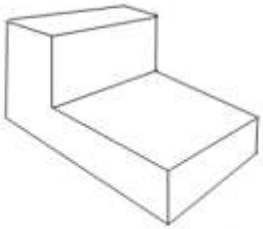

4 _____

5. Which of these is not a pictorial drawing? _____

   Isometric b) Oblique c) Orthographic

6. A circle will appear in an isometric as a(n)_____.

   a) Template b) ellipse c) parabola d)arc

7. In what kind of pictorial does the front view show its true shape?

   _____

   a) An isometric b) A perspective c) An oblique

8. What kind of oblique shows its depth at half its true distance? _____.

9. To make true measurements in isometrics, you only measure along the _____.
10. What type of pictorial gives you a view of how an object actually looks to the eye? _____

Pictorials Quiz II

Name _____

1. Which common drawing method is not a pictorial drawing?
   a) Multiview drawing
   c) Isometric drawing
   b) Oblique drawing
   d) Perspective drawing
2. What is the major advantage of an oblique drawing over an isometric?
   a) Oblique drawings just look better.
   b) Oblique drawings are better for showing dimensions.
   c) In oblique drawings, frontal features are easier to draw.
   d) In oblique drawings, all circular features appear circular.
3) Lines in an isometric drawing are not distorted when
   a) they are construction lines.
   b) they run along the principal axes.
   c) they do not run along the principal axes.
   d) None of these, all lines are distorted in isometric drawings.
4) What is the difference between a cabinet and cavalier drawing?
   a) Cabinet is an isometric drawing; cavalier is oblique.
   b) Cavalier is an isometric drawing; cabinet is oblique.
   c) Cabinet drawings are only half as large as cavalier drawings.
   d) The depth scale is reduced in cabinet drawings.

Answer to the Exercises for textbook

Answer for check point 7.1

1. Representation of an object on a picture plane as it would appear to an observer station point and viewing along the direction of projection. The constituting element that should be fulfilled are:-
   Object, observer, station point, projection rays (projectors), plane of projection (picture plane)
2. Central and parallel projection. In central projection system projectors start from a single point where as in parallel projection projectors are parallel.
3. Both use parallel projectors. But oblique uses other than 90 where orthographic projection only uses 90◦ for its projectors.

Answer for check point 7.2

1. To represent a three dimensional object on a two dimensional plane. And to let illiterate persons on drawing visualize drawing proposal of an object.
   The limitation of pictorial representation are
   - It has distorted appearance
   - Require more time to prepare
   - Difficult to measure and give dimensions
2. Axonometric projection mostly shows the three planes exposed equally.

   Oblique projection keeps the front view as it appears on the multi view drawing and projects the side edge at an angle of 30◦, 45◦ or 60◦.

   Perspective drawing represents an object pictorially as if the object was captured with a camera.

Solution for check point 7.3

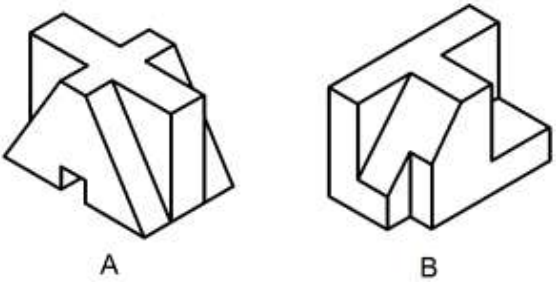

Solution for exercise 1

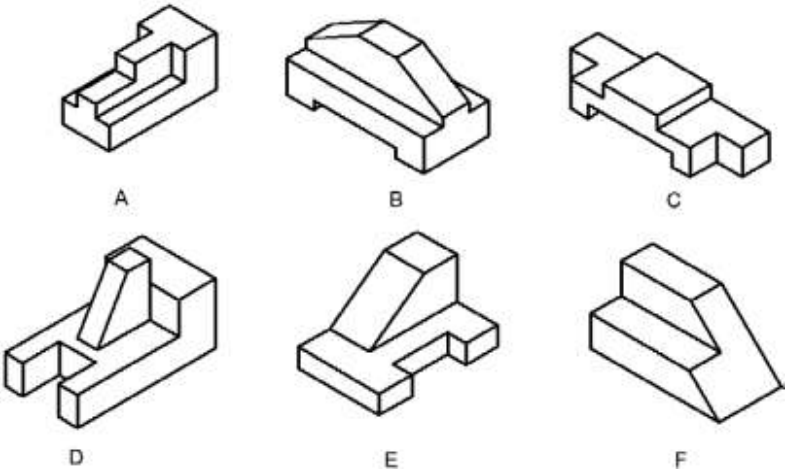

Solution for check point 7.4

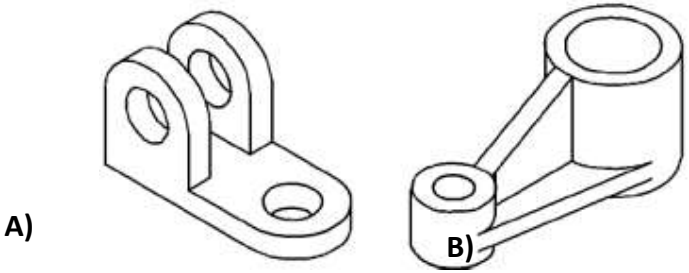

Solution for exercise 2

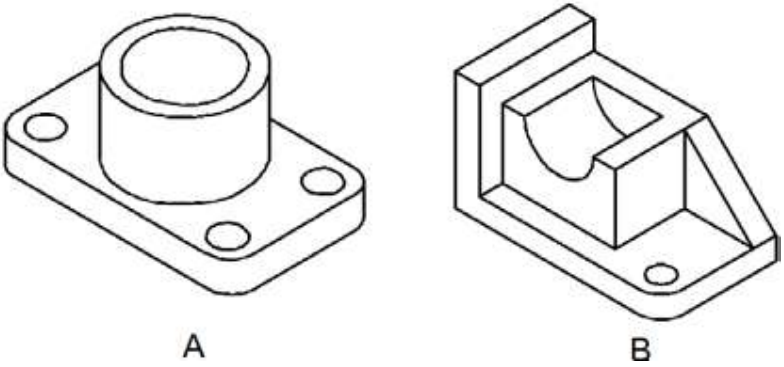

Answer for check point 7.5

1. Axonometric projection inclines the three principal planes more or less in a similar exposure, especially if it is isometric projection. But when we go to oblique projection the front plane as it appears on elevation where the side edges will be projected with 30◦, 45◦ or 60◦.
2. Cavalier and cabinet

Solution for check point 7.6

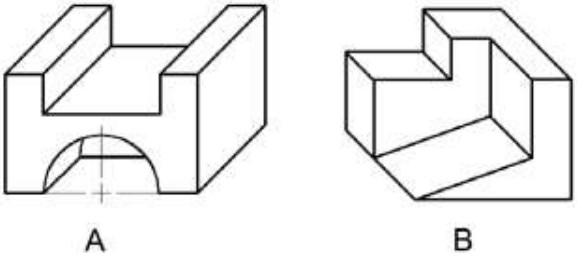

Solution for check point 7.7

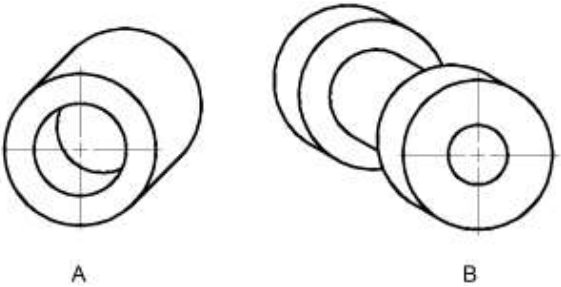

A B

Solution for exercise 3

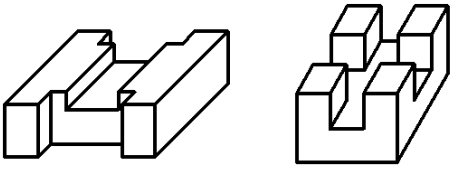

A B

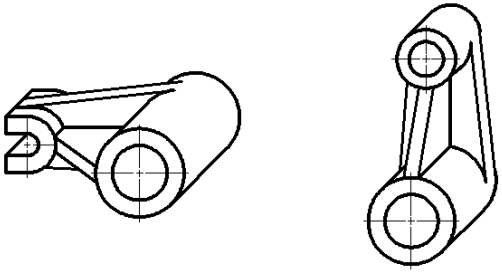

C D

Solution for check point 7.8

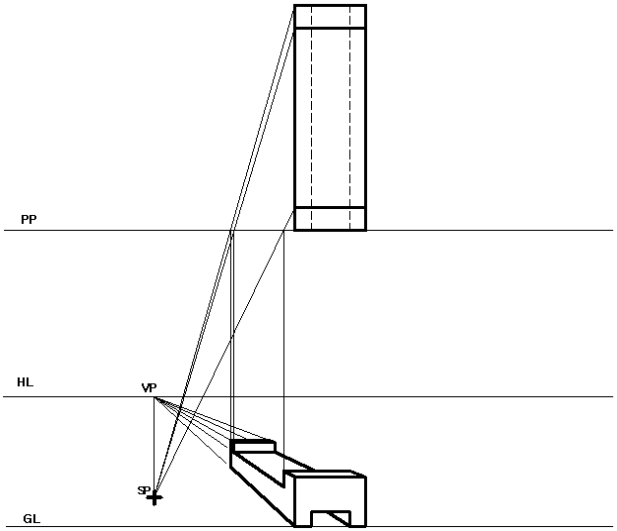

A

One point perspective

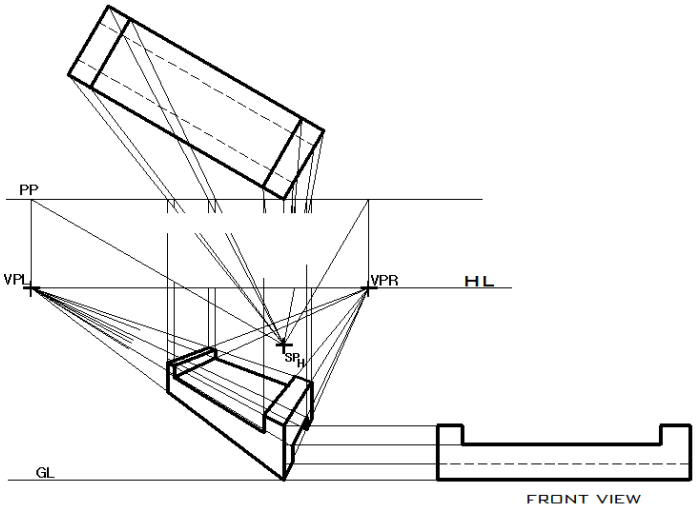

Two point perspective

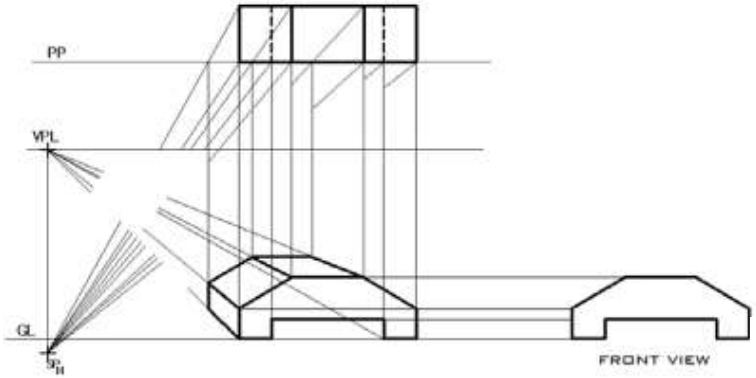

B

One point perspective

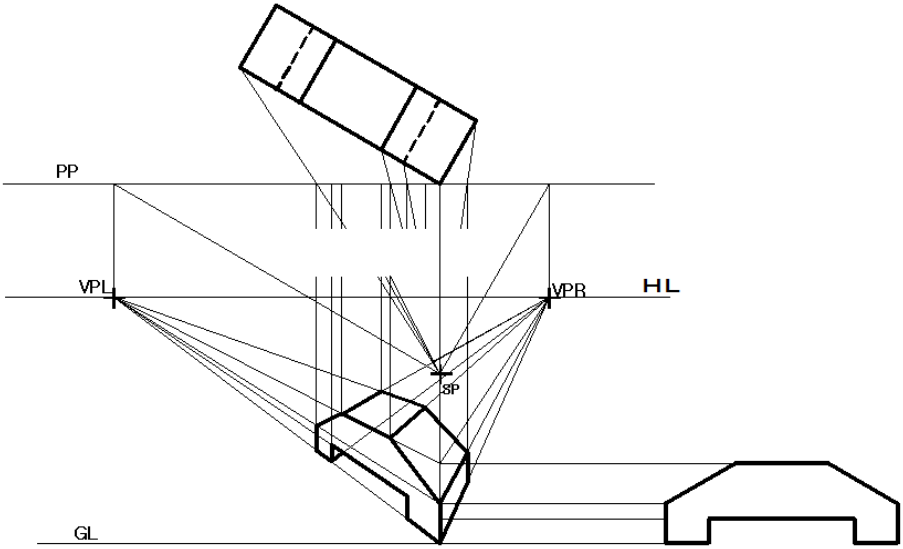

Two point perspective

Solution for exercise 4

1

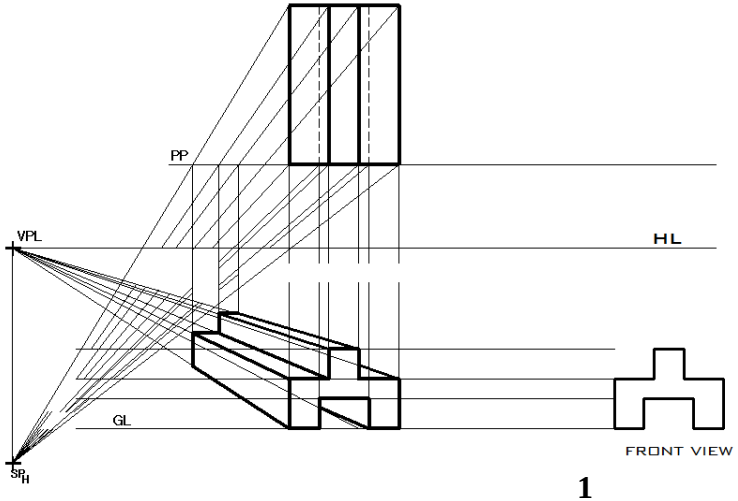

1

One point perspective

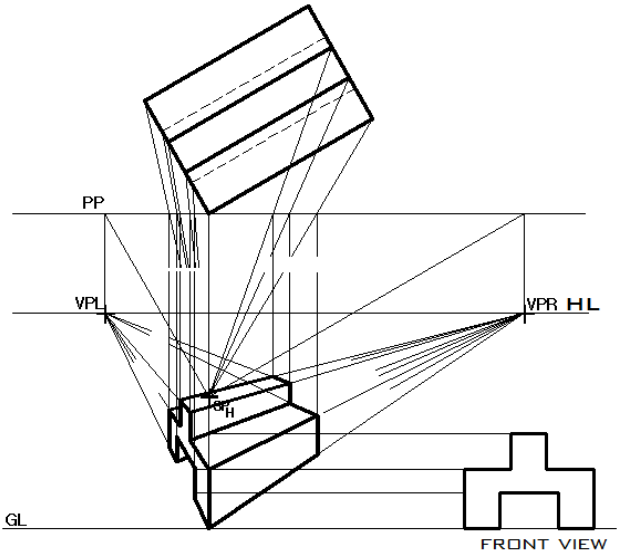

Two point perspective

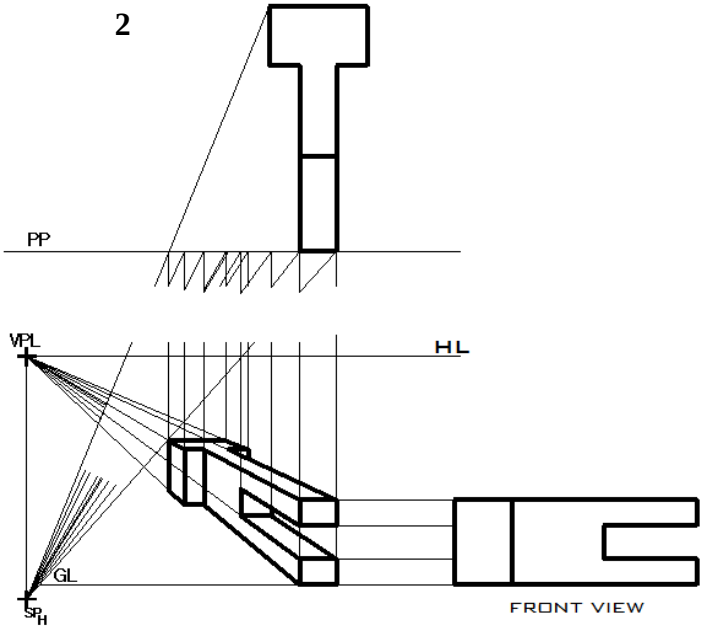

One point perspective

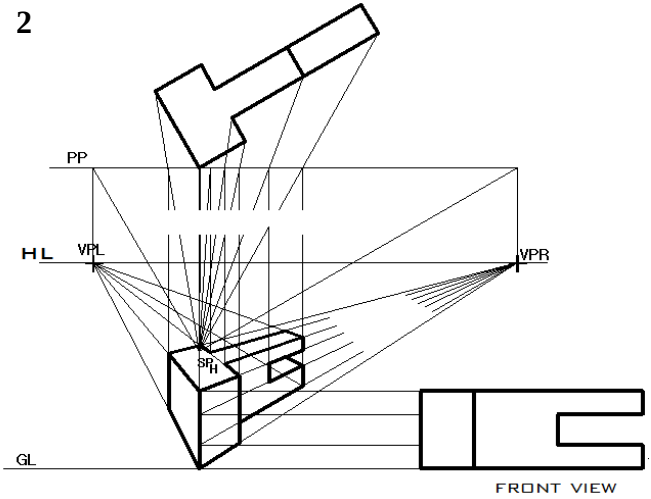

Two point perspective

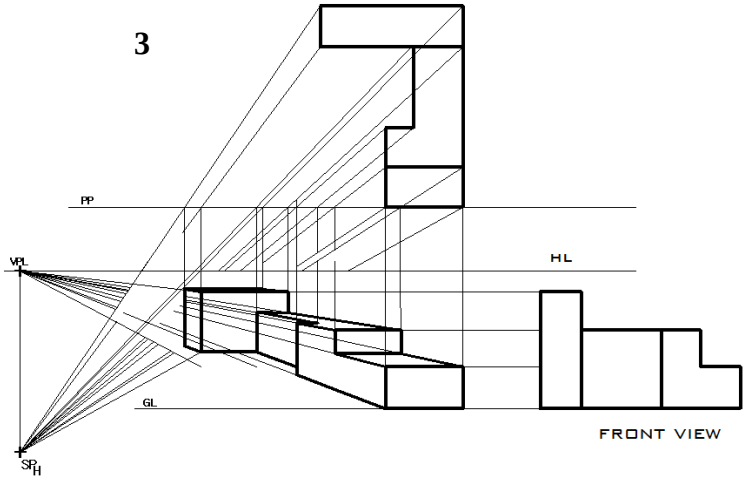

One point perspective

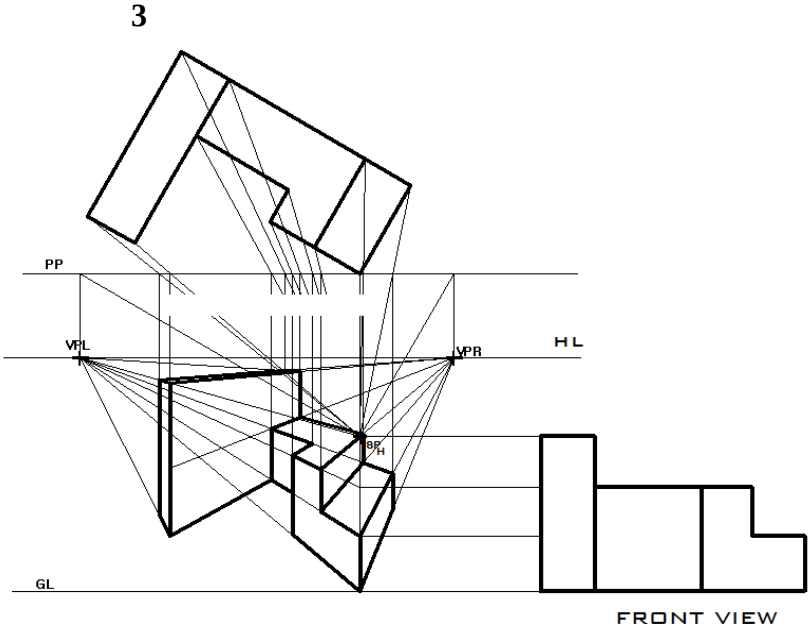

Two point perspective

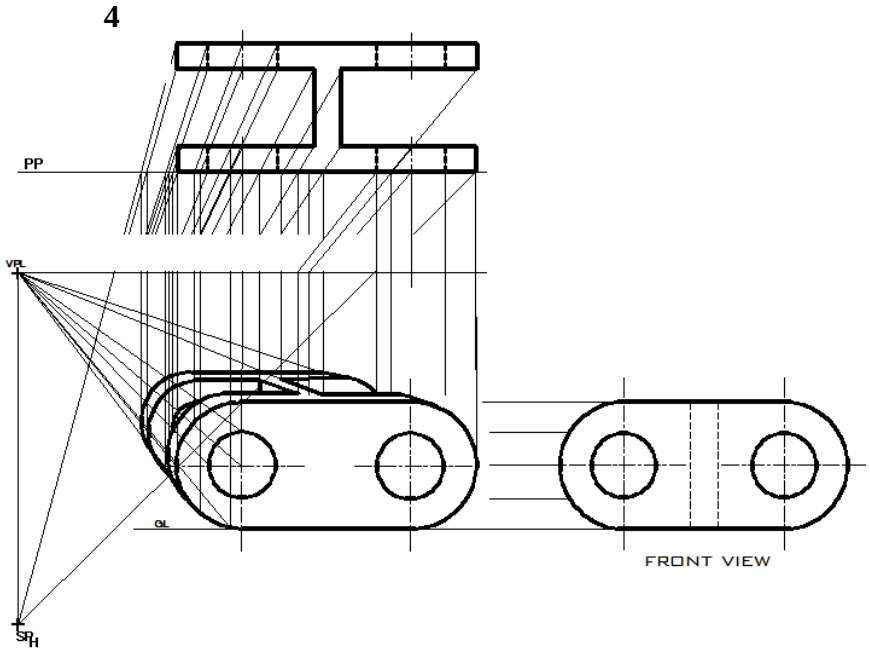

Reference

- C.Jensen,J.D.Helsel (1994). 4th ed., Macmillan/McGraw-Hill, New Yourk.
- Enginneering Drawing with Auto CAD T-Jeyapoovan Vikas Publishing House PVTLTD 2004.
- Macmillan, (1974). **Technical Drawing** (6thed). F.E Giesecke, A.Mitchell, and Spencer and I.L.Hill.
- Machine Drafting and related Technology Herbert W.Yankee Webster Division, Mc GRAW Hill Book Company (1966).
- T.E French, C.J. Virxk (1972). "Engineering Drawing and Graphics Technology, 11th ed, McGram-Hill,Inc.
- W.J Luzadder (1977). "Fundametals of engineering drawing; 7thed, Prentice. Hall Inc."
- Verne C. Frykland Ph.d (General Drafting) Meknight and Mcknight Publishing Company 9th Edition 1948.

P.BY FITSUM HELINA 【ቀሰዎ Academy coordinator】

Jan 25, 2022