WWW.NEWELECTRONICS.CO.UK

VOLUME 56 / ISSUE 08
AUGUST 2023

16
**OPEN-CORE SURGERY**
New Electronics talks to the CEO and founder of Semidynamics

20
**AUDIO SOFTWARE**
How to meet the challenge of assessing audio software

30
**IOT STANDARDISATION**
Why embracing standardisation will help accelerate IoT development

# new electronics



12

# THE CHANGING FACE OF DEFENCE

WHILE TRADITIONAL DEFENCE CAPABILITIES CONTINUE TO ATTRACT THE BULK OF INVESTMENT A RANGE OF NEW TECHNOLOGIES ARE NOW EMERGING

INSPIRATION STARTS HERE Digi-Key ELECTRONICS Get inspired at digikey.co.uk

# INSPIRATION
## STARTS HERE



From millions of in-stock parts to cutting-edge technical resources—we've got everything you need to turn inspiration into innovation.

Get inspired at **digikey.co.uk** or call 0800 587 0991.

Digi-Key ELECTRONICS

Digi-Key is a franchised distributor for all supplier partners. New products added daily. Digi-Key and Digi-Key Electronics are registered trademarks of Digi-Key Electronics in the U.S. and other countries. © 2023 Digi-Key Electronics, 701 Brooks Ave. South, Thief River Falls, MN 56701, USA

ECIA MEMBER
Supporting The Authorized Channel

# GOVERNMENT GREEN PLEDGES IN DOUBT

From wind farms to electric vehicles, the UK government appears to be backtracking on many of its green pledges



> “THE SUNAK ADMINISTRATION – WELL FUNDED BY THE OIL AND GAS INDUSTRY AND BY CLIMATE DENIERS – NOW APPEARS TO HAVE TAKEN A COURSE OF ACTION THAT ACTUALLY LOOKS TO UNDERMINE ITS OWN CLIMATE PROGRAMMES”

**Is the UK government actively undermining its environmental climate programmes?**

Over the past month Prime Minister Rishi Sunak has announced plans to allow over 100 new oil and gas licences in the North Sea, his government is accused of failing to support the UK offshore wind industry while the business secretary, Kemi Badenoch, has suggested that the 2030 electric vehicle mandate could be watered down - all raising doubts about the government’s commitment to its own green pledges.

Badenoch’s suggestion that the zero-emissions vehicle mandate to phase out petrol and diesel engine cars could be amended failed to mention the fact that the UK government is not providing adequate infrastructure or the capacity for the growth of electric vehicles.

A new study from Juniper Research suggests that it’s the lack of public infrastructure that’s severely limiting EV adoption in urban environments and that present initiatives from governments are not sufficient to accelerate EV adoption.

Ministers are also now shifting their stance over what they are calling ‘anti-motorist’ policies such as council’s ability to impose speed limits, while the prime minister has ordered a review of low-traffic neighbourhoods (LTNs) – despite Boris Johnson’s government spending £200m on such schemes.

With soaring costs Britain is now also facing a crisis in its offshore energy programme with critics warning that without an urgent overhaul of government support, the construction of new sites might prove to be economically unviable under the existing regime.

Inflation has caused massive problems for the industry, but the government has failed to adjust the scheme used that guarantees the price paid for energy. To be fair it’s been trying to hold down electricity prices through the contract for difference (CfD) scheme that’s intended to ensure investors have the confidence to continue investing but, nonetheless, it all adds to the confusion that appears to surround the government’s approach to climate change and the adoption of greener energy policies.

All of this is happening against a backdrop of raging fires across the Mediterranean and warnings about changes to weather systems that could have cataclysmic implications for global food production.

This UK government is beginning to get a reputation for doing the bare minimum when it comes to addressing pollution and promoting a green agenda.

In fact, in the past few weeks, the Sunak administration – well funded by the oil and gas industry and by climate deniers – now appears to have taken a course of action that looks to undermine its own climate programmes. NE

**Neil Tyler, Editor**
neil.tyler@markallengroup.com

newelectronics

**New Electronics keeps designers and managers abreast of the latest developments in the world's fastest moving industry**

| | |
|---|---|
| Editor | **Neil Tyler** neil.tyler@markallengroup.com |
| Contributing Editors | **Chris Edwards, John Walko** editor@newelectronics.co.uk |
| Art Editor | **Neil Young** neil.young@markallengroup.com |
| Sales Manager | **James Creber** james.creber@markallengroup.com |
| Publisher | **Peter Ring** peter.ring@markallengroup.com |
| Publishing Director | **Marc Young** marc.young@markallengroup.com |
| Managing Director | **Jon Benson** jon.benson@markallengroup.com |
| Production Manager | **Nicki McKenna** nicki.mckenna@markallengroup.com |

**New Electronics editorial advisory panel**

**Trevor Cross**, Chief Technology Officer, Teledyne e2v
**Pete Leonard**, Electronics Design Manager, Renishaw
**Pete Lomas**, Director of Engineering, Norcott Technologies
**Neil Riddiford,** Principal Electronics Engineer, Cambridge Consultants
**Adam Taylor**, Embedded Systems Consultant

**ISSN 0047-9624 Online ISSN 2049-2316**

Annual subscription (12 issues):
UK £108. Overseas; £163. Airmail; £199.
New Electronics, incorporating Electronic Equipment News and Electronics News, is published monthly by MA Business, Hawley Mill, Hawley Road, Dartford, DA2 7TJ. T: 01322 221144
E: ne@markallengroup.com

**Moving on?**
If you change jobs or your company moves, please contact **circulation@markallengroup.com** to continue receiving your free copy of New Electronics

MA Business
Part of
Mark Allen
**www.markallengroup.com**

© 2023. All rights reserved. No part of New Electronics may be reproduced or transmitted in any form, by any means, electronic or mechanical, including photocopying, recording or any information storage or retrieval system, without permission in writing from the Publisher.The views expressed do not necessarily represent those of the editor of New Electronics. Advertisements in the journal do not imply endorsement of the products or services advertised.

Please read our privacy policy, by visiting http://privacypolicy.markallengroup.com. This will explain how we process, use & safeguard your data

Printed by: Pensord Press Ltd, CF48 3TD.

PPA abc recycle When you have finished with this magazine please recycle it.

# AUGUST ISSUE

NEWS SECTION

**07** UK's first pilot line design incubator

**08** Infineon uses recyclable PCBs

**09** Semiconductor Education Alliance to address skills shortage

**10** Nexeon signs supply deal with Panasonic

COVER

**12 Changing face of defence**

Traditional defence capabilities continue to attract investment but new technologies are emerging. By Neil Tyler

INTERVIEW

**16 Delivering full customisability**

Neil Tyler talks to the CEO and founder of Semidynamics about how the company has created a core architecture for the RISC-V community

BUSINESS & FINANCE

**18** TrendForce predicts PCB market contraction in 2023

AUDIO TECHNOLOGY TESTING

**20 The testing hierarchy'**

How to meet the challenge of assessing audio software, by Dave Betts of audio software specialist AudioTelligence

LONG READ

**24 Delivering next generation security scanners**

ADI'S Eamon Nash explains how edge processing is enabling the development of next-generation millimetre wave scanners

SCIENCE & TECHNOLOGY

**28** New high-power thermoelectric devices could provide cooling in next-generation electronics

INTERNET OF THINGS

**30 Embracing standardisation**

Embracing standardisation will help to unlock and accelerate growth in IoT development. Neil Tyler investigates

MEDICAL ELECTRONICS

**32 Times are changing**

How are new sensing technologies helping to deliver remote medical monitoring techniques and improve a patient's quality of life? Borut Kastelic explains

UNIVERSITIES & INNOVATION

**34** Aerospace gets £80m boost with new University of Sheffield AMRC innovation facility

RF TECHNOLOGY & DESIGN

**36 Getting to grips with RF design**

Mouser Electronics' Mark Patrick provides an introductory guide to RF design and terminology

EVENTS DIARY

**42 Out & About**

What's on and where around the UK and Europe

**NEW ELECTRONICS WEEKLY EZINE**

**NEW ELECTRONICS**' weekly eZine features the latest blogs, news, articles and more. To register for your copy, go to **www.newelectronics.co.uk**

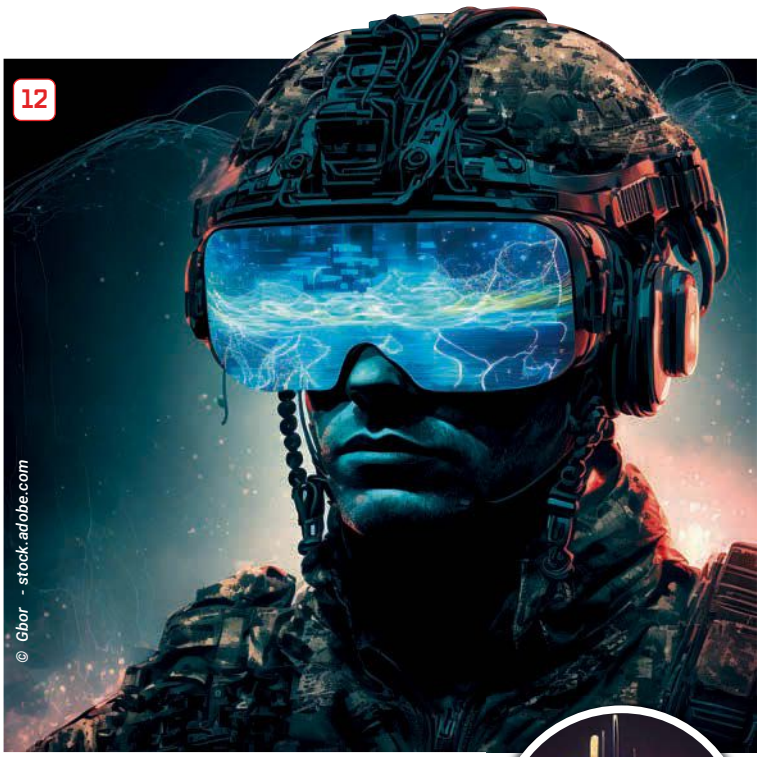
12
© Gbor - stock.adobe.com

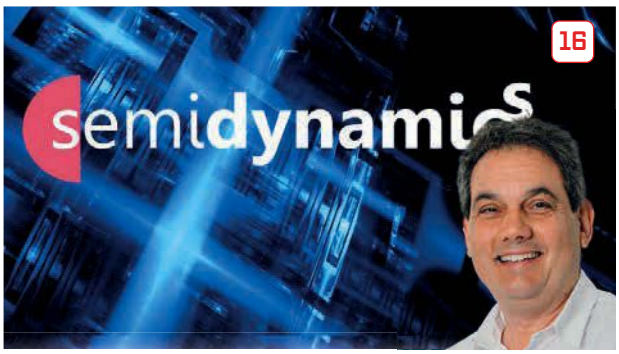
16
semidynamics


18


20
© Stellan - stock.adobe.com

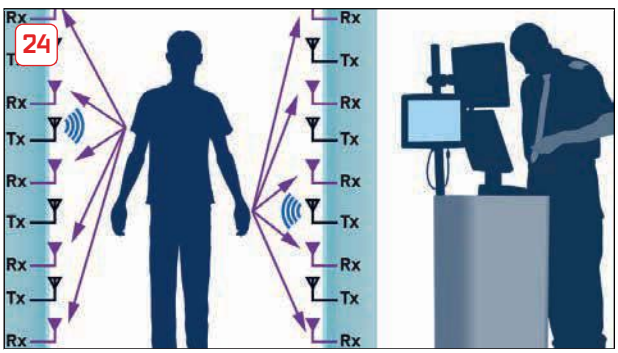
24
© Stellan - stock.adobe.com
Rx
Tx


32

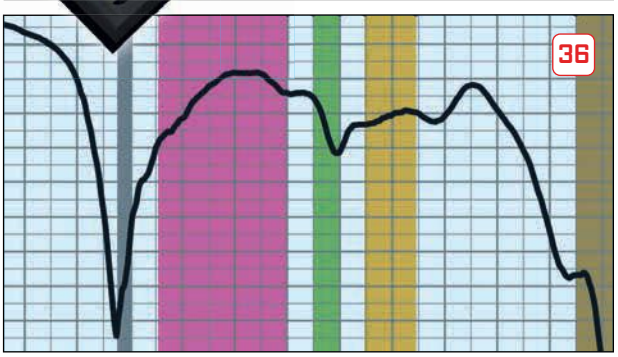
36

TRUST THE ORIGINAL




FIBRE OPTIC SYSTEM SOLUTIONS BY NEUTRIK®

Mark Allen
FOUNDATION



Images: stock.adobe.com

A brighter, fairer future for all

Mark Allen Foundation partners with a variety of amazing charities to support their work in the UK and internationally. The Foundation was established by Mark Allen Group to enable its employees to coordinate and amplify their fundraising efforts, as well as to raise significant funds for charity through its portfolio of client events.

Some of the charities and organisations supported previously include: YoungMinds, STOP THE TRAFFIK, Blind Veterans UK, The Felix Project, The Trussell Trust, BeeKind, Orchestra of the Age of Enlightenment, We Mind & Kelly Matters and Mates in Mind.

**We would like to extend our heartfelt thanks to everyone who very kindly supports our charity fundraising.**

givingworks

All donations to the Mark Allen Foundation will be processed and administered by GivingWorks. GivingWorks is a Registered Charity. Registered Charity Number 1078770. GivingWorks is registered in England. Registered Company Number 03816852.

YOUNGMiNDS fighting for young people's mental health · STOP THE TRAFFIK · Rebuilding lives after sight loss · Felix THE FELIX PROJECT · Orchestra of the Age of Enlightenment · the trussell trust · BeeKind · Mates in Mind

www.markallengroup.com/foundation

**For further information, please email hello@markallenfoundation.com**

# UK'S FIRST **PILOT LINE DESIGN INCUBATOR**

**SILICON CATALYST,** the incubator solely focused on accelerating semiconductor solutions for startups, has announced that the UK government has commissioned SiliconCatalyst.UK to run its pilot semiconductor design incubator.

The Department for Science Innovation and Technology (DSIT) released an open tender in May this year to commission the creation and delivery of a two-year pilot business incubator, focused on supporting early-stage UK companies.

Semiconductor design has long been an area of global strength for the UK,

**SILICON CATALYST TO RUN UK GOVERNMENT'S FIRST PILOT DESIGN INCUBATOR**

with companies such as Arm, Imagination Technologies and Graphcore leading the industry in delivering highly innovative design architectures to capture market leading positions.

This announcement is the first public outcome of the National Semiconductor Strategy published in the summer. The decision to commission SiliconCatalyst.UK to deliver a pilot semiconductor design incubator, with the first cohort of UK-based semiconductor startups to undertake an intensive nine-month incubation process, will begin in October. They will be developed and supported by the Silicon Catalyst's global ecosystem.

This nine-month no-cost incubation process, where early-stage UK semiconductor startups will gain access to the full Silicon Catalyst ecosystem, will provide access to EDA tools, Design IP and Semiconductor Foundry prototyping.

Companies participating in the Pilot Semiconductor Design Incubation programme will also have access to the 270+ Silicon Catalyst advisors, Strategic Partners and an extensive network of investment groups. They will be mentored by experienced semiconductor industry executives, and connected into Silicon Catalyst's global network.

Crucially, they will also be helped to prepare for the follow-on stage of their journey, including raising investment and potentially accessing later-stage incubation.

During the nine-month cohort session, the Incubator will provide 3 semiconductor startup focused training courses per month for the successful applicants. The interactive in-person workshops will help the early-stage startups learn how to develop a go-to-market plan, run board meetings, negotiate contracts and many other semiconductor industry-specific training courses that will help these new UK companies scale their business.

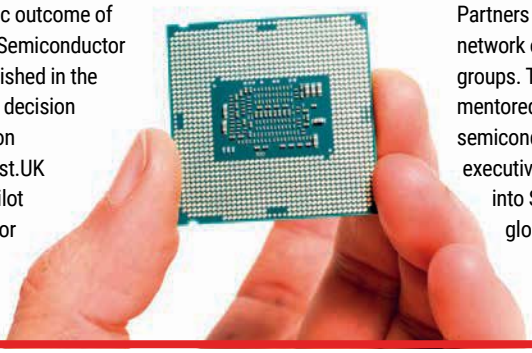

© ctvvelve - stock.adobe.com

# HAILO EXPANDS **HAILO-8 AI PORTFOLIO**

**HAILO HAS** expanded its Hailo-8 AI accelerator portfolio. Its new Hailo-8 Century PCIe card line now offers up to 208 Tera Operations per Second (TOPS) for demanding applications, and the Hailo-8L makes advanced AI processing available for entry-level applications.

Commenting Orr Danon, CEO of Hailo, said, "With the rise of generative AI driven applications, our powerful and cost-efficient solutions bring AI performance and power efficiency, enabling state-of-the-art transformer-based models at the edge."

The Hailo-8L, with up to 13 TOPS, supports entry level products requiring limited AI capacity or lower performance. The Hailo-8 Century line, comprising PCIe cards delivering 52 to 208 TOPS, supports demanding applications

**CHIP LOOKS TO ADDRESS A DIVERSE RANGE OF EDGE AI APPLICATIONS**

such as video management systems handling a large number of video streams.

The Hailo-8 Century PCIe cards deliver best-in-class power efficiency at 400 FPS per watt on the ResNet50 benchmark model. They feature a robust design that supports industrial temperature ranges and ensures compatibility with virtually any environment or application.

The Hailo-8 Century product line is being described as an enabler for many market verticals which are showing increased demand for AI compute power in large camera deployments.

Both the Hailo-8 Century and Hailo-8L provide low-latency, high-efficiency processing, capable of handling complex pipelines with multiple real-time streams and concurrent processing of multiple models and AI tasks. The expanded portfolio also features scalability for future upgrades, as all products are compatible with the Hailo-8 software suite.

For reference, the Hailo-8L can run the benchmark classification model ResNet50 at 500 FPS, and the Century high performance PCIe cards can run this model at up to 10K FPS.

Danon concluded. "This significant expansion marks a milestone in delivering seamless real-time intelligence for diverse edge AI applications ranging from security and smart cities to transportation, smart retail, industrial automation, automotive, and beyond."




TURN TO PAGE 12

*With DSEI next month New Electronics looks at the latest technology trends in the defence space*

# RECYCLABLE **PCBS**

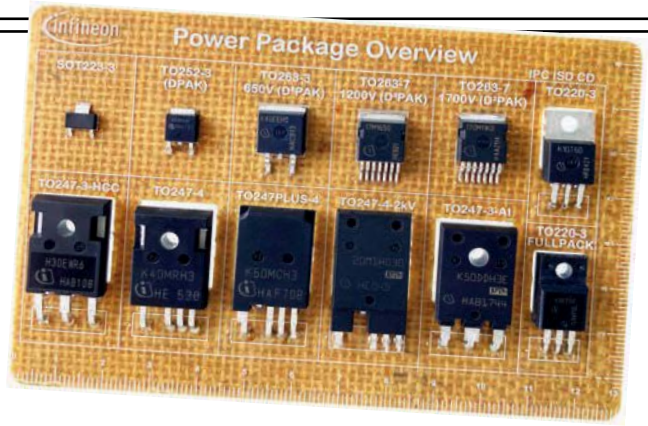


**INFINEON TECHNOLOGIES has introduced Soluboard, a recyclable and biodegradable printed circuit board (PCB) substrate based on natural fibres and a halogen-free polymer.**

**INFINEON USES RECYCLABLE PCBS FROM JIVA MATERIALS TO REDUCE ELECTRONIC WASTE**

The product was developed by UK start-up Jiva Materials and helps to reduce the carbon footprint of the electronics industry.

Soluboard's plant-based PCB material is made from natural fibres, which have a much lower carbon footprint than the traditional glass-based fibres. The organic structure is enclosed in a non-toxic polymer that dissolves when immersed in hot water, leaving only compostable organic material. This not only eliminates PCB waste, but also allows the electronic components soldered to the board to be recovered and recycled.

"For the first time, a recyclable, biodegradable PCB material is being used in the design of electronics for consumer and industrial applications – a milestone towards a greener future," said Andreas Kopp, Head of Product Management Discretes at Infineon's Green Industrial Power Division.

"Adopting a water-based recycling process could lead to higher yields in the recovery of valuable metals," said Jonathan Swanston, CEO and co-founder of Jiva Materials. "In addition, replacing FR-4 PCB materials with Soluboard would result in a 60 percent reduction in carbon emissions – more specifically, 10.5 kg of carbon and 620 g of plastic can be saved per square meter of PCB."

Currently, Infineon is using the biodegradable material to reduce the carbon footprint of demo and evaluation boards – but is also exploring the possibility of using the material for all boards.

Infineon has produced three different demo boards using the technology and plans to expand its offering over the next few years. Based on the results of ongoing stress tests, the company plans to provide guidance on the reuse and recycling of power semiconductors removed from Soluboards, which could significantly extend the lifetime of the electronic components.

The research will also provide Infineon with a fundamental understanding of the design and reliability challenges customers face with the new material in their core applications. In particular, customers will benefit from the new knowledge as it will contribute to the development of sustainable designs.

# QORVO RELEASES **QSPICE**

**QORVO, A provider of connectivity and power solutions, has announced the release of QSPICE, a new generation of circuit simulation software.**

QPSICE provides power and analogue designers with significantly higher levels of design productivity through improved simulation speed, functionality and reliability.

In addition to advancing the state of the art in analogue simulation technology, QSPICE allows designers to simulate complex digital circuits and algorithms. Its combination of schematic capture and fast mixed-mode simulation make it a suitable tool to solve the increasingly complex hardware and software challenges faced by today's system designers.



**QORVO ANNOUNCES RELEASE OF QSPICE FOR POWER AND ANALOGUE DESIGNERS**

"QSPICE enables an entirely new generation of mixed-mode circuit simulation," said Jeff Strang, general manager for Qorvo's Power Management business. "Whether an engineer is developing AI algorithms for EV battery charging, optimising a pulsed-radar power supply or evaluating the newest silicon carbide FETs, QSPICE is the perfect platform for innovation."

Qorvo's QSPICE is available free of charge and offers numerous enhancements over legacy analogue modelling tools.

These improvements include: complete support for advanced analogue and digital system simulations, an upgraded simulation engine that uses advanced numerical methods and is optimised for modern computing hardware - including a GPU-rendered user interface and SSD-aware memory management - to provide dramatically higher speed and accuracy, reduced overall runtimes and a 100% completion rate, based on Qorvo benchmark tests. Also included is a suite of test circuits and availability of a regularly updated QSPICE model library featuring Qorvo's silicon carbide and advanced power management solutions, making it easier for customers to evaluate and design with Qorvo power.

# DOWNLOADABLE **CAD MODELS**

**HARWIN OFFERS DOWNLOADABLE CAD MODELS**

**Harwin is integrating two powerful tools, from TraceParts and TrustedParts, into its website to help provide engineers with all the resources and tools required to develop new system designs more quickly and easily.**

**The partnership with TraceParts ensures designers can access 3D models of Harwin's connectors, board-level EMC shielding and PCB hardware. Models are available in all current file formats for engineers to integrate directly into their CAD system and design, saving time and streamlining the development process.**

**TrustedParts gives engineers and specifiers access to aggregated price and availability data for genuine parts from only authorised/franchised distributors for electronic components sourcing. Over 6000 of Harwin's fast-moving parts are listed in local languages and currencies of each of the key markets around the world.**

**Combined with Harwin's extensive set of resources, including product specification sheets, test report summaries, product training information, and tooling instruction sheets, engineers will now have access to a range of tools to ensure that they can correctly design with the company's connectors.**

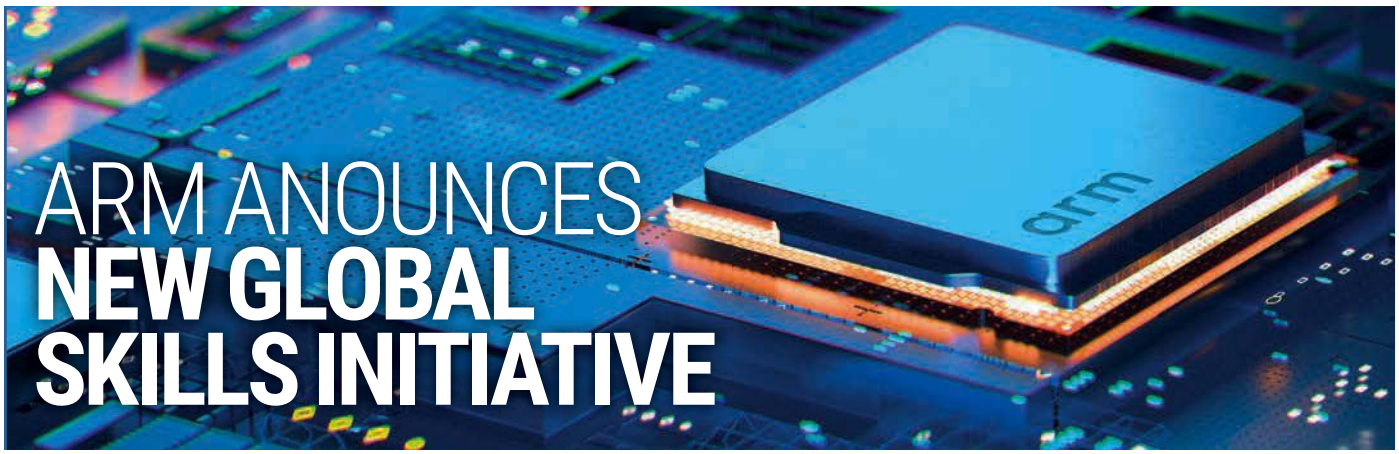


# ARM ANOUNCES NEW GLOBAL SKILLS INITIATIVE

**WITH THE** semiconductor industry's global strategic importance more widely understood than ever before, the opportunity for growth and innovation is clear. However, the availability of the right skills in the workforce could be a significant barrier to progress.

In response, Arm has announced a new global initiative known as the Semiconductor Education Alliance, with the support of partners including Arduino, Cadence, Cornell University, the Semiconductor Research Consortium, STMicroelectronics, Synopsys, Taiwan Semiconductor Research Institute, the All-India Council for Technical Education, and the University of Southampton.

"The Semiconductor Education Alliance is bringing together key stakeholders across industry, academia and government to address the growing challenges of both finding talent and upskilling the existing workforce," said Gary Campbell, EVP Central Engineering Arm. "We want to ensure these challenges don't hinder industry growth at this critical time, and the alliance is urging anyone with contributions to make to the semiconductor skills pipeline to get involved."

The alliance aims to bring together several existing partnerships and workstreams from Arm and the wider industry and aims to create

**SEMICONDUCTOR EDUCATION ALLIANCE WILL LOOK TO ADDRESS THE SKILLS ISSUE**

and build new ones. Deliverables will include competency frameworks tailored to the industry needs of specific geographies, and accelerated educational and training pathways, resources, and services that will help to build and support future talent pools.

"Developed by our highly experienced team of education professionals spanning schools to university and beyond, the alliance is an evolution of our existing education model in which Arm will play a vital coordinating role," explained Campbell. "Community members will share resources, capabilities, and expertise in a flexible, federated and open model through a variety of forums. This will give teachers, researchers, aspiring or practicing engineers, and learners easier access to critical resources and unlock new opportunities to collaborate on projects such as joint bids for research grants."

A number of projects are already in the works, and include:

- Arm, along with EDA partners, working on new VLSI design educational resources using state-of-the-art EDA tools and IP.
- New distance learning solutions in computer engineering and informatics being developed from Arm and partners in industry and academia.
- A global SoC design platform for academia with access to the latest semiconductor fabrication technologies from Arm and partners.

To bring further diversity of talent into the industry, the alliance is also committed to growing and supporting multiple routes into semiconductor careers, such as technical, vocational and self-study pathways.

To achieve this, a key pillar of the alliance's approach is to allow the flexibility to engage in a variety of ways, making the industry accessible to a broad range of diverse individuals, regardless of their prior education or experience.

Members of the alliance will create new opportunities for learners to gain hands-on experience through internships, apprenticeships, and co-op placements, as well as distance learning tracks on massive open online course (MOOC) platforms, where access is offered free to learners regardless of their financial means or geographic location.

"You might ask, why now? And isn't this work happening already?" said Campbell. "While it's true that many industry players have robust, high quality educational programmes that offer state of the art content, tools and services, we believe the industry is at a tipping point when it comes to the skills gap, and more cohesive, industry-wide action is required to truly have an impact.

"The importance of investing in skills and education is something Arm has always recognised, and our vast computing footprint and global ecosystem means we have a unique and far-reaching point of view on the skills needed as the industry evolves. The Semiconductor Education Alliance aims to better align the industry around common goals, shared resources, and communities of best practice to tackle the skills gap that threatens progress today.

"At Arm, we're committed to being a driving force within this alliance as we come together as an industry to continue to nurture a pipeline of talent building the future of computing on Arm."

Campbell said that with a strong and growing membership spanning the semiconductor supply chain, the alliance was already seeing support from a range of key industry players.



> "THE SEMICONDUCTOR EDUCATION ALLIANCE IS BRINGING TOGETHER KEY STAKEHOLDERS ACROSS INDUSTRY, ACADEMIA AND GOVERNMENT TO ADDRESS THE GROWING CHALLENGES OF BOTH FINDING TALENT AND UPSKILLING THE EXISTING WORKFORCE." GARY CAMPBELL

# NEXEON SIGNS DEAL WITH PANASONIC

**NEXEON, A** UK battery materials company, has announced a partnership with Panasonic Energy.

Nexeon has developed an advanced silicon-based anode material that has the potential to improve the energy density of lithium-ion cells by up to 50%. According to the company, this breakthrough redefines the limits of energy density and will enable a new era of enhanced battery performance.



The agreement will see Nexeon supplying next generation 'drop-in' material to Panasonic that will allow it to use a much higher percentage of silicon in lithium-ion cell anodes

## NEXEON TO SUPPLY SILICON ANODE MATERIAL TO PANASONIC, BOOSTING EV RANGE

when compared with first generation materials such as Silicon-oxide, without requiring critical changes to the cell manufacturing process or significant capital investment.

Increasing the energy density of lithium-ion batteries unlocks much better product performance for EV owners, offering increased vehicle range and reduced charging time and will enable automotive manufacturers to realise significant cost savings on their EV battery pack systems.

"The partnership with Panasonic is a testament to the progress we have made with our battery material technology," said Scott Brown, CEO of Nexeon. "Our Silicon Anode material will bring dramatically improved vehicle range and charging speeds for EVs, helping to address drivers' concerns and accelerate the transition to cleaner forms of mobility."

Nexeon aims to speed up the adoption of sustainable and more efficient battery technology to drive change on a global scale throughout the battery value chain. Through close collaboration with Panasonic, its 'drop-in' material will power EVs from 2025.

# DESIGNSPARK CAPABILITIES EXTENDED

**RS GROUP** has announced a further expansion in the capability of DesignSpark – its online community for engineers – with its new 'Product Design Centre'

The design centre includes an extensive pool of technical information on more than one billion electronic component part numbers, enabling DesignSpark members to make more informed decisions about the products they use in their designs.

The centre significantly enhances the CAD library that is already available to DesignSpark members and provides more than forty different kinds of content, including product data, environmental and lifecycle information, as well as 3D



## RS EXPANDS DESIGNSPARK CAPABILITIES WITH NEW PRODUCT DESIGN CENTRE

models, footprints, and schematics.

New product information will be available as part of all DesignSpark subscription options including product datasheets; RoHS and Reach compliance status (Y/N); and 3D model and footprint data. In addition – available in both the DesignSpark Creator and DesignSpark Engineer options – is further component data including lifecycle risk, environmental risk, RoHS and Reach compliance information and DRC status.

In addition, more detailed product information – including technical attributes, predictive lifecycle, product alternative, export compliance to HTS, ECCN and Schedule B, product change and end-of-life notifications – is available as part of DesignSpark Engineer.

# MOTOR CONTROL COLLABORATION

**TOSHIBA ELECTRONICS** Europe has collaborated with MikroElektronika to integrate its TB9053 DC-motor driver IC into the DC Motor 26 Click Board to accelerate development of automotive applications.

The TB9053 provides a dual H-bridge output stage that can drive two motors at up to 5A or a single motor up to 10A. Protection and diagnostic features are built-in, as well as additional circuitry to save external components such as charge-pump capacitors.

The integration of features on the TB9053, in its thermally enhanced QFN40 package, simplifies design, enables compact electronic control units (ECUs), and helps to ensure enhanced reliability.

Now featured on the MIKROE DC Motor 26 Click Board, the TB9053 can be designed into a range of automotive subsystems.

The DC Motor 26 Click Board connects directly to microcontroller development




## TOSHIBA AND MIKROELEKTRONIKA TO ACCELERATE AUTOMOTIVE MOTOR CONTROL DEVELOPMENT

boards that support the industry-standard mikroBUS interface. The motor can be controlled through the mikroBUS socket using a PWM signal (CLK) or the TB9053's SPI serial interface. PWM or SPI control is selected by user-accessible switches that also govern selection of single- or dual-motor modes.

Additional header pins allow motor forward, reverse, brake, drive and stop commands depending on the control mode. The board accepts a 3.3V or 5V input voltage and allows a separate supply for the TB9053 to power the motors at a voltage from 4.5V to 28V.

The built-in diagnostic capabilities of the TB9053 allow ongoing performance and functional observation. Current monitoring and current limiting features are also incorporated. If the IC detects overtemperature, overcurrent, or under-voltage, a series of red LEDs indicate the fault to the user.

The Click Board comes with a software library from MIKROE that contains easy-to-use functions and example code to accelerate development. Users can also take advantage of the MIKROE Software Development Kit, mikroSDK, which contains open-source software libraries, a unified API, and software development tools.

MANHATTAN SKYLINE

**armStone MX8MP**
**High performance single board computer with NXP i.MX8 Plus CPU.**



The i.MX 8M Plus multimedia CPU from NXP (4x ARM® Cortex®-A53 (64 bit) with 1.8GHz & Cortex®-M7 CPU) is ideally suited for applications with demanding graphics in building automation as well as in industrial and medical technology.
With Linux on the Cortex®-A53 cores and FreeRTOS on the Cortex®-M7 core, NXP continues its heterogeneous concept and thus also offers an ideal option for real-time processing.
For graphics processing, the CPU offers 3D HW acceleration, OpenGL ES2.1/ 3.0/ 3.1 as well as video playback (h.265). A special feature is the Neural Processing Unit (NPU) for Machine Learning with 2.3 TOPS. (PicoITX format).
Up to 8GB LPDDR4 RAM and up to 64GB eMMC, as well as USB3.0, Audio IN/OUT/MIC, 2x Gigabit Ethernet, mPCIe (SIM slot), MIPI CSI, I2C, SPI, UART, CAN and SDIO (uSD slot) are available.
2x LVDS (up to FullHD), MIPI.DSI and also DVI are available as display interfaces.
A resistive or PCAP touch panel is connected via I2C.
Another option is an on-board WLAN/BT module (pre-certified) with antenna socket.

**Manhattan Skyline Ltd.**
**Unit 5, Bracknell Business Centre, Downmill Road, Bracknell, Berkshire RG12 1QS, UK**

**www.mansky.co.uk**
**Tel: 01344 307733**



**Complete Electronic Solutions**

- Circuit Protection
- Connectors
- EMC Products
- Switches
- Input Systems
- Solutions

sales.uk@schurter.com
+44 1296 319 000
www.schurter.com

SCHURTER
ELECTRONIC COMPONENTS

MOUSER ELECTRONICS

**Full speed ahead**

Trust the new product introduction leader™ to move from concept to prototype at lightspeed

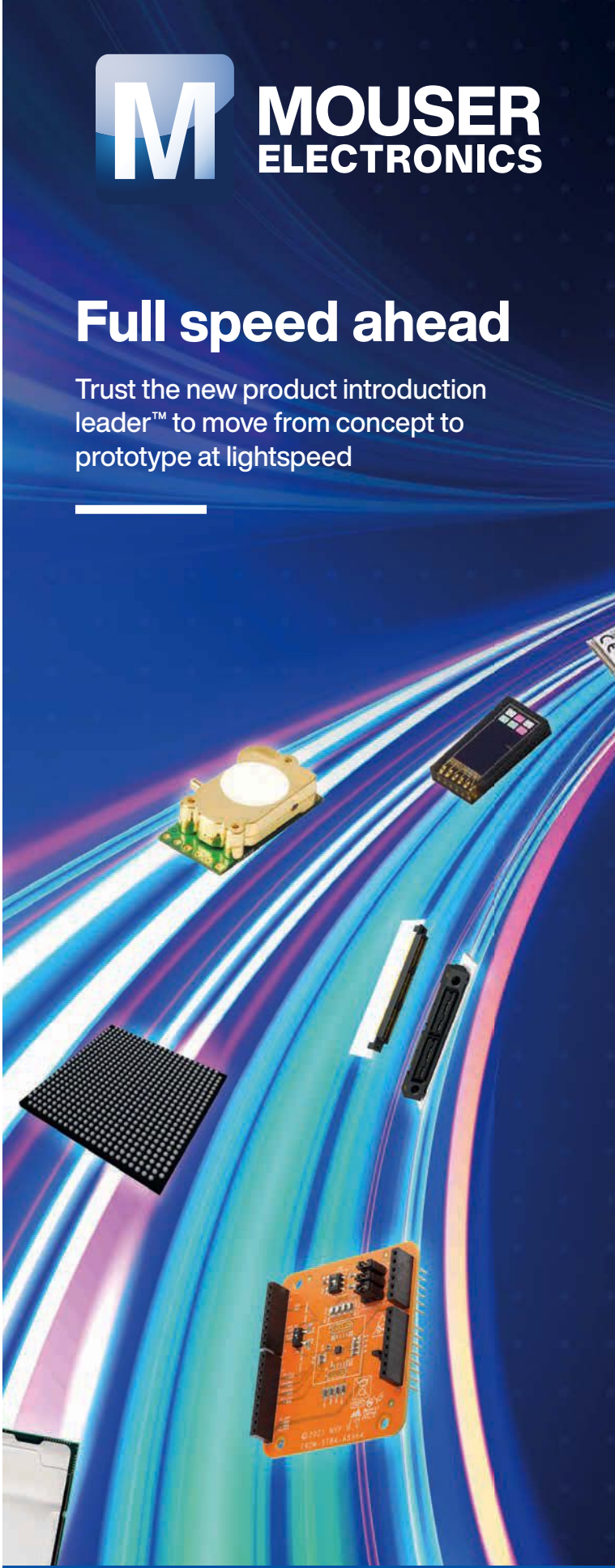

**mouser.co.uk/new**

> IN THE UK, AI-ENABLED AUTONOMOUS COMBAT VEHICLES AND RESUPPLY SYSTEMS TO DELIVER SUPPLIES WITHOUT PUTTING PEOPLE IN DANGER ARE BEING DEVELOPED

# THE CHANGING FACE OF DEFENCE

While traditional defence capabilities continue to attract the bulk of investment a range of new technologies are now emerging. NEIL TYLER reports

**Over the past year and a half, the defence world has had to confront a number of seismic changes from Russia's invasion of Ukraine to growing tensions in Asia between the US and China.**

Consequently, countries are reassessing their defence commitments and in many cases looking to increase budgets.

While traditional defence capabilities continue to absorb most of the investment being made, restocking supplies that have been sent to Ukraine for example, many new technologies are now emerging and becoming a priority, while supply chain resilience and initiatives to invest in domestic defence industry supply chains are also becoming more important.

NATO's 2022 Strategic Concept, which was updated at The Madrid Summit this June, made the point that the West is no longer solely confronted by conventional forms of warfare but that it has now spilled over into the space and cyberspace fields. In fact, there is now a large and growing 'grey zone', short of actual war, that's filled with state, non-state and malign actors.

The biggest trend around the world has been the need to effectively integrate forces and capabilities, both at national level but also between allies and partners, and this requires a change in culture, improved training and, crucially, the use of data ensuring commanders have a full range of capabilities that can work together seamlessly at all levels.

## EMERGING TECHNOLOGIES

Emerging and disruptive technologies (EDT) are having a profound impact on security enabling militaries to become more effective, resilient, cost-efficient and sustainable.

NATO's 2022 Strategic Concept affirms that EDTs bring both opportunities and risks while altering the character of conflict. These technologies are acquiring greater strategic importance and becoming key points of global competition and NATO is looking to promote innovation and increase investments in EDTs to retain its interoperability and military edge.

For NATO there are nine priority technology areas:

- artificial intelligence (AI)
- autonomy
- quantum
- biotechnologies and human enhancement
- hypersonic systems
- space
- novel materials and manufacturing
- energy and propulsion
- communications networks

Data is a key enabler for all EDTs and NATO has also developed an Implementation Strategy to support all forms of digital transformation.

It has also put in place a Data and Artificial Intelligence Review Board and an Autonomy Implementation Plan. Both set out operational principles and how NATO should look to develop and use these technologies.

## DIANA

NATO directly engages with innovator communities on the ground and has developed a number of initiatives and bodies to encourage greater innovation in EDTs.

One of these bodies is the Defence Innovation Accelerator for the North Atlantic (DIANA). First established in 2021 it is intended to foster transatlantic cooperation on critical technologies, promote interoperability and harness civilian innovation by engaging with academia and the private sector.

DIANA works directly with leading researchers and entrepreneurs, from early-stage start-ups to more mature companies, and runs competitive industry challenges which are based on a critical defence and security problem. Innovators are asked to develop deep tech, dual-use technologies to tackle them.

Innovators that are selected into DIANA's programmes receive non-dilutive grants (i.e., investment capital that does not require them to give up equity or ownership in their company), and they gain access to over 10 accelerator sites and more than 90 test centres across the Alliance. They also have access to a growing network of mentors (scientists, engineers, industry experts, end-users and government procurement experts) and a community of trusted investors.

DIANA launched its first three pilot challenge programmes in 2023 and its aim is to have the capacity to work with hundreds of innovators each year across an even wider network of accelerator sites and test centres throughout the Alliance.

NATO has also established a NATO Innovation Fund to provide strategic investments in start-ups developing dual-use emerging and disruptive technologies in areas that are critical to Allied security. The Fund is set to be

DID YOU KNOW?

**30bn** The dollar value of the military drone market in 2029



© Gbor - stock.adobe.com

the world's first multi-sovereign venture capital fund and will focus on early-stage investments, providing risk capital directly into these start-ups, while also having the ability to invest in other top-tier deep-tech venture capital funds.

## KEY TRENDS

Across the defence landscape new technologies are emerging. Among them are: space technology; artificial intelligence; autonomous systems; energy weapons, and hypersonic and missile technology.

Space is one of NATO's key priority areas, with the US and the European Space Agency taking the lead.

Here in the UK British engineers successfully completed a stratospheric flight trial of BAE Systems' High Altitude Pseudo Satellite (HAPS) Uncrewed Aerial System (UAS) - PHASA-35 – earlier this year.

Operating at over 66,000 feet, the PHASA-35 trial allowed engineers to assess the performance of the experimental solar-electric drone operating at the very edge of the earth's atmosphere.

Designed by BAE Systems' subsidiary Prismatic it's intended to provide a persistent and stable platform for various uses including ultra-long endurance intelligence, surveillance and reconnaissance, as well as security but it also has the potential to be used in the delivery of communications networks including 4G and 5G and could be used in a wide range of applications, as an alternative to traditional airborne and satellite systems.

PHASA-35, which has a 35-metre wingspan and carries a 15kg payload, uses a range of technologies including advanced composites, energy management, solar electric cells and photo-voltaic arrays to provide energy during the day which is stored in rechargeable cells to maintain flight overnight.

Commenting on the successful trial, Dave Corfield, CEO of Prismatic said, "This is a fantastic achievement for everyone involved and shows the commitment of BAE Systems to invest in new technologies and markets. PHASA-35's first stratospheric flight demonstrates that this vehicle is on track to become the go-to system for long endurance, high altitude and communications applications in the future."

Interestingly, the PHASA-35 programme sits within FalconWorks, a new centre for advanced and agile research and development within BAE Systems' Air sector that's focused on generating ideas, innovation and collaboration, whether that's working with new or existing partners, academia, research organisations, SMEs and national governments.

Specialists at FalconWorks look to assess emerging trends and deliver solutions and increase the use »

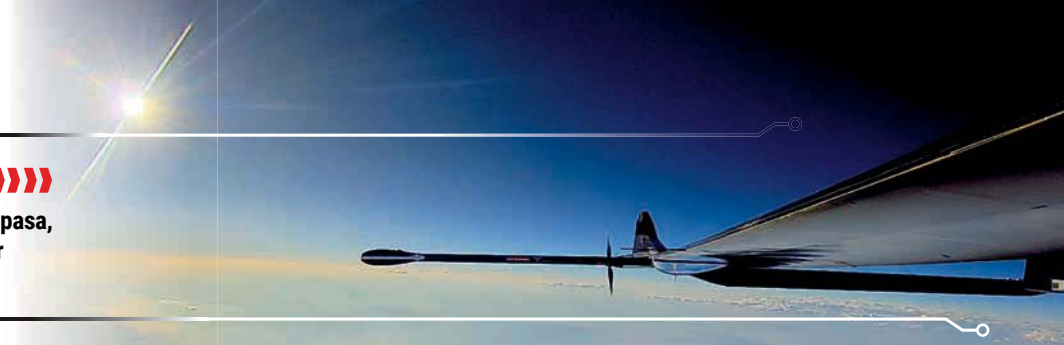

TURN TO PAGE 16



**NE talks to Roger Espasa, the CEO and founder of Semidynamics**

» of digital technologies such as artificial intelligence, quantum sensing and robotics.

Another area of interest is direct energy weapons. Considerable research and development is taking place with this technology and analysts suggest that as a sector it could be worth over $17bn by 2029.

Directed energy weapons work by converting chemical or electrical energy into radiated energy and focusing it on a target, resulting in physical damage or disruption. Lasers, for example, use light energy to heat up or burn the target, while microwaves use electromagnetic waves to interfere with electronic systems, and particle beams use accelerated subatomic particles to penetrate and damage a target.

Different firing demonstrations have been conducted throughout the last decade, but in the past two years developments have accelerated and are likely to be boosted further by the construction of advanced ships on which these weapons are expected to be deployed.

The US, Germany and UK have all tested directed energy weapons systems at sea and have reported considerable success. Directed energy weapons can respond more quickly, precisely, and discreetly to different threats and don't require ammunition, which reduces the logistical and operational costs.

Artificial Intelligence is another area of interest, and the adoption of AI systems is expected to increase significantly amongst global militaries. It can be used to detect incoming weapons far faster than human operators or provide real-time battlefield recommendations based upon large quantities of data.

The US is investing in trusted AI systems to enhance its capabilities and is planning a major expansion in AI use and adoption as is NATO, which has called AI technology an 'emerging and disruptive technology,' that carries both risks and opportunities for members.

> "DIRECTED ENERGY WEAPONS WORK BY CONVERTING CHEMICAL OR ELECTRICAL ENERGY INTO RADIATED ENERGY AND FOCUSING IT ON A TARGET, RESULTING IN PHYSICAL DAMAGE OR DISRUPTION"

US defence giant RTX has recently demonstrated advanced AI-enabled communications systems that are capable of rapidly distributing data during the US Indo-Pacific Command's Northern Edge 2023 exercise series in Okinawa, Japan.

Collins Aerospace, an RTX business, used advanced AI-enabled communications, and intelligent gateway technology, to connect partners from The Five Eyes alliance and others to a data network, expanding joint force capabilities.

"This was a critical demonstration to prove our solutions can facilitate and enable connectivity for a large and growing joint force network," said Elaine Bitonti, vice president, Connected Battlespace & Emerging Capabilities for Collins Aerospace. "It's important to understand that the joint fires data our systems processed and distributed came from a large network of platforms that weren't originally designed to connect and share data like this. Not only did our gateway and cross domain solution connect those platforms they also automated the distribution of that data to the right partner at the right security level."

The AI also accelerated decision-making timelines, with AI-enabled machine-to-machine communications able to deliver threat awareness data from the US Space Force's Unified Data Library to multiple aircraft, demonstrating how they can be used as connectivity nodes on the battlefield.

AI is seen as fundamentally changing the character of warfare, whether supporting intelligent and autonomous unmanned systems or through AI-enabled data analysis, information processing and intelligence analysis delivering enhanced command information.

As a result, governments are spending vast sums on exploiting advances in AI. In the US, for example, work has been undertaken on the concept of Motherships of drones that can release smaller drones from the air and the sea, while troops are employing exoskeletons and wearable electronics loaded up with combat apps.

In the UK, AI-enabled autonomous combat vehicles and resupply systems to deliver supplies without putting people in danger are being developed as are smart systems capable of guiding and advising soldiers in the field, based on data gathered from small drones that are used to collect video footage from the front line.

## OTHER DEVELOPMENTS

Additive manufacturing is another area in which investment and innovation is taking place and last year the US commissioned the largest metal AM printer in the world with the aim of being able to repair or produce parts on the move, whether at sea or closer to a land-based front line.

Europe and Japan have also invested significant amounts in additive manufacturing and here in the UK, BAE Systems has declared its intention that 30% of its Tempest 6th Generation fighter programme parts will be created in their AM smart factories.

5G - the next generation of faster mobile wireless connectivity - will be entering service globally over the next few years and is likely to have a significant impact on the battlefield of tomorrow which, as we've already discussed, will be data-heavy and more connected than ever. That will then have an impact on unmanned systems – the use of drones in the Ukraine war has demonstrated the importance of this technology on the modern battlefield – and the global military drone market is projected to be worth over $30 billion by 2029.

Next month sees the defence industry gather at DSEI in London. Whatever your views it's an exhibition that has successfully connected the global military community with some of the most advanced and cutting-edge technologies.

In a world in which we are seeing the largest conventional war in Europe in almost 80 years and where global rivalries are intensifying, investing in our defences is sadly more important than ever. NE

# ISOLATED SPI COMMUNICATION MADE EASY

**Monitoring and controlling diverse systems requires direct access to the sensors and actuators, preferably from a central location and by means of a standardised communication method such as the serial peripheral interface (SPI). SPI is a synchronous serial data bus that facilitates data exchange between the devices and the central control unit over long distances. The communication takes place according to the master-slave principle and is full duplex. The SPI interface is made up of three lines: SDI, SDO, and SCK.**

While the SPI communication method is generally suitable for distances up to approximately 10m, to bridge longer distances, a repeater is often needed because of attenuation due to the increased line resistance of long cables. These signals must be amplified again. This also allows a larger signal-to-noise ratio (SNR) to be achieved at the same time. A device such as the isoSPI communication interface IC LTC6820 from Analog Devices, Inc. (ADI) can be used to read the signals.

Thanks to its innovative design, SPI communication can be maximised relatively easily by adding galvanic isolation using a twisted pair cable and appropriate transformers.

Because of harsh conditions frequently found in industrial environments, galvanically isolated communication components are often required to protect users from dangerous voltages as well as to ensure system reliability. Furthermore, isolation enables exact measurements despite occasional common-mode voltages. The isolation barrier is thereby key in separating the input stage from the rest of the system while still enabling a connection.

Figure 1 shows how all slaves are controlled by a single master. Masters and slaves can be microcontrollers or ADCs with an SPI interface to which the sensors, or microcontrollers, are usually connected. The LTC6820 thus enables bidirectional data transmission required for SPI communication between two completely galvanically isolated devices. It encodes the SPI signals from the master into differential signals with up to 1Mbps, which are then transmitted through the galvanic isolation barrier and the twisted pair cables. At the opposite end of the cable, the differential signals are received again by an LTC6820 and decoded into SPI signals, which are then routed to the slave bus. The LTC6820 additionally supplies the required currents needed to drive the signals across the isolation barrier. Through an external resistor, these currents can be adapted to system requirements such as desired cable length, SNR, and immunity.

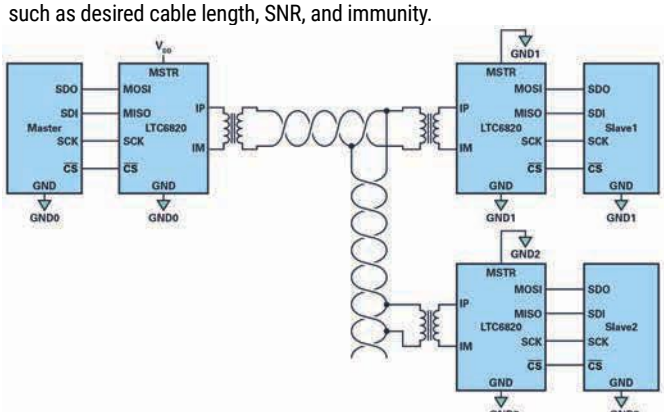


*Figure 1. Isolated SPI interface for control of multiple boards (slaves) via a common master.*

However, note that despite the use of SPI repeaters, the data rate is limited and dependent on cable length. For example, the data rate for the circuit shown in Figure 1 with a 100m CAT5 cable is only about 0.5Mbps, which is half of the maximum possible value of 1Mbps the LTC6820 could provide (see Figure 2).

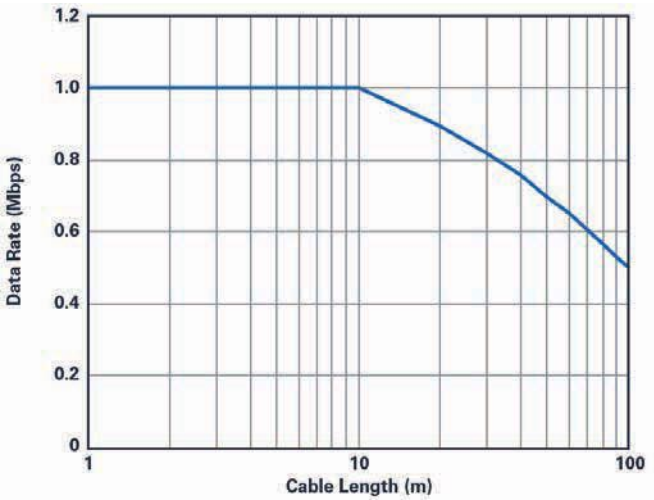


*Figure 2. Data rate in relation to cable length with use of a CAT5 cable.*

By using isoSPI communication ICs, the complexity of circuits for isolated transmission of SPI communication signals over long distances can be simplified, as a significant number of components typically required in conventional circuits can be omitted. In addition, with the LTC6820, distances of up to 100m, which are not rare in industrial settings, can be realised. The LTC6820 makes it easy to implement daisy-chained applications in which one master controls several slaves. Furthermore, it is an ideal device for battery monitoring systems as they require galvanically isolated communication due to their partially explosive charge units (for example, lithium-ion batteries).

ANALOG DEVICES
AHEAD OF WHAT'S POSSIBLE™

**Thomas Brand, Field Applications Engineer, Analog Devices can be reached at:**
thomas.brand@analog.com




DID YOU KNOW?

**14%** How much of the chip market RISC-V could account for in 2025

1 Semidynamics' customisable Vector Unit has been developed to go with its innovative range of fully customisable 64-bit RISC-V cores

# DELIVERING 'OPEN CORE SURGERY'

NEIL TYLER talks to Roger Espasa, the CEO and founder of Semidynamics, about their core architecture and vector units developed for the RISC-V community

**Founded in Barcelona in 2016, Semidynamics is a European supplier of high-bandwidth, high-performance cores with vector units that are targeted at machine learning and AI applications.**

The company's founder and CEO is Roger Espasa, who spoke with New Electronics after attending the RISC-V Summit held in Barcelona, earlier this year.

Espasa started his career, having gained a Phd in Computer Science from Universitat Politècnica de Catalunya in 1997, with the Alpha Microprocessor Group on a vector extension to the Alpha architecture.

The Alpha team was ultimately acquired by Intel and Espasa then found himself working for them until 2014. In that time, he led a team developing a vector extension for the x86 ISA which was initially deployed in the Larrabee and Knight's Corner product and which then became the AVX-512 extension.

He also led the team implementing the texture sampling unit for the original Larrabee chip and worked on the core for the Knight's Landing product (14nm) and led the core development for the follow-on Knights Hill 10nm product.

In 2014, Espasa joined Broadcom but when the project he was working on was scrapped he decided to form his own business and Semidynamics came into being.

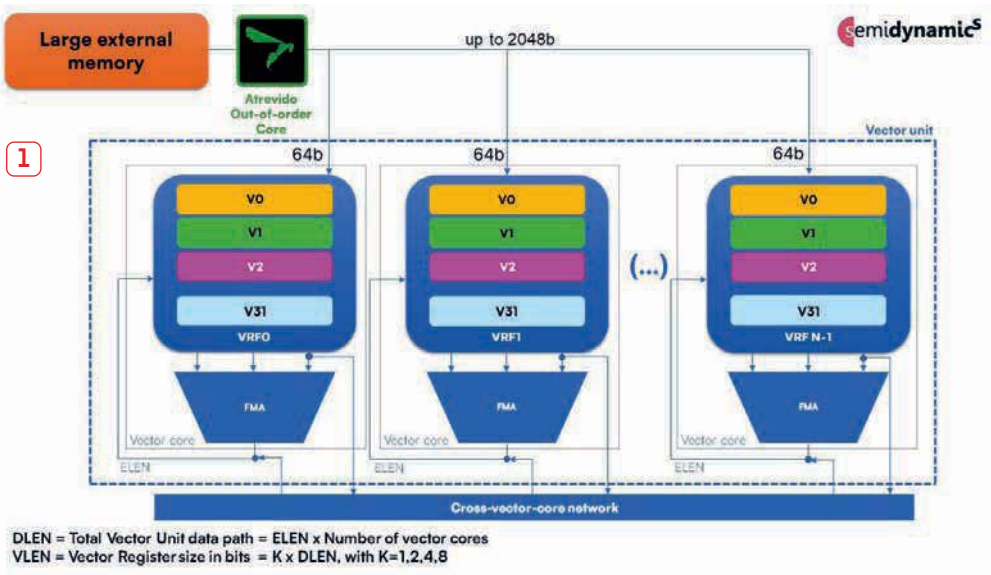


"Our first contract was with Esperanto Technologies for whom we developed a 7nm architecture for machine learning. We also helped design the Avispado RISC-V core, which was targeted at high-bandwidth applications and supported an open vector interface to vector processing units," Espasa explains.

## A BUSINESS RESET

"However, I realised that working for one customer was not ideal and operating in effect as a provider of design services was not going to be scalable. So, as a company we decide to develop our own IP."

Semidynamics received funding from the European Union and got considerable support from the Barcelona Supercomputing Centre.

"Developing and growing a team was not a new experience for me, I'd done it at both Intel and Broadcom, but that's not to say it doesn't come without its challenges.

"Today there are 45 people here at Semidynamics but it hasn't been easy to get the skilled people that we've needed, despite more tech companies coming to Spain. We've seen competition for talent increase significantly."

According to Espasa Spain has three main technology centres. One being Barcelona and the others in Malaga and Valencia.

"Cisco, for example, recently announced that it was opening a facility in Barcelona and that does make it harder to attract talent because as a small business we can't compete in terms of salaries. What we can offer though, is the opportunity to work at the cutting edge. We're developing CPUs, RISC-V vector units and engineers can immerse themselves in the



TURN TO PAGE 20

**How to meet the challenge of assessing audio software. By Dave Betts**

> "WE HAVE SUCCESSFULLY CREATED THE CORE ARCHITECTURE THAT THE RISC-V COMMUNITY REALLY WANTS – ONE THAT IS FULLY CUSTOMISABLE."

challenges associated with artificial intelligence and machine learning.

"Obviously I'd like to have seen the business develop faster but we are attracting new customers and there's a lot of interest in our work," said Espasa. He continued, "It's taken six years to get where we are today, but I would say that we are well into our second phase. 2019 and our decision to create our own IP was certainly a major reset for the business and I was probably overly optimistic as to where we would be today. For anybody starting a business it takes time to successful deliver a new technology, especially new IP, and there is then the added pressure of finding buyers who will need a good reason to buy from you.

"It's all about relationship building with customers and building confidence in what you have to offer, but we've got there."

Having attended the RISC-V Summit in Barcelona, Espasa was obviously pleased at the reaction among the developers, architects, technical decision and policy makers who were attending the event when they got to see the company's IP in action.

"RISC-V is set to account for 14 per cent of the chip market by 2025 and there has been a surge in announcements around the technology. Many companies are developing product lines based on RISC-V and with our heritage in high performance and vector units it was an obvious space for us to enter," he explains.

According to Espasa traditional RISC-V processor cores have had configurations that were fixed by the vendor or had a very limited number of configurable options such as cache size, address bus size, interfaces and a few other control parameters.

"By contrast our IP cores are designed to enable the customer to have total control over the configuration, whether that's in terms of new instructions, separate address spaces, new memory accessing capabilities, and so forth. As a result, we can precisely tailor a core to meet each project's needs so there are no unrequired overheads or compromises."

He makes the point that Semidynamics' IP makes it possible to implement a customer's 'secret sauce' features into the RTL in a matter of weeks, which he claims to be, "something that no-one else offers."

"Every designer using RISC-V wants to have the perfect set of Power, Performance and Area along with unique differentiating features and now, for the first time, they can have just that provided by us," explained Espasa.

## NEW CUSTOMISABLE IP AND CORES

Over the past few months Semidynamics has accelerated the roll-out of new technology and has recently announced an entirely customisable Vector Unit to go with its range of fully customisable 64-bit RISC-V cores.

The Vector Unit is compliant with the RISC-V Vector Specification 1.0 and with its customisable features offers enhanced data handling capabilities.

"We also recently announced our Atrevido core which is unique in that we can do 'Open Core Surgery' on it which means we can actually open up the core and change the inner workings to add features or special instructions to create what is effectively a totally bespoke solution that meets the specific need of the customer.

"We have taken the same approach with our new Vector Unit in order to rapidly process massive amounts of data, which is critical when it comes to AI and machine learning."

A Vector Unit is composed of several 'vector cores', roughly equivalent to a GPU core, that perform multiple calculations in parallel. Semidynamics' vector core can be tailored to support different data types depending on the customer's target application domain.

Semidynamics has equipped its Vector Unit with a high-performance, cross-vector-core network that provides all-to-all connectivity between the vector cores at high bandwidth, even for the very large, 32-vector core option. The unit is used for specific instructions in the RISC-V standard that shuffles data between the different vector cores.

"This means that the Vector Unit can process unprecedented amounts of data bits," explained Espasa. "And to fetch all this data from memory, we have our Gazzillion technology that can handle up to 128 simultaneous requests for data and track them back to the correct place in whatever order they are returned."

According to Espasa, "These innovative technologies will take RISC-V to a whole new level. We can offer the fastest handling of big data currently available and that will open up opportunities in many application areas."

The company continues to innovate and last month launched the next member of its Atrevido family of 64-bit cores. The Atrevido 423 has a wider, 4-way pipeline, allowing for the decoding and retirement of up to two times more instructions than its recently launched, 2-way, 223 core. "It is coupled with more functional units, which significantly increases the IPC (instructions-per-cycle)," explained Espasa.

Having left stealth mode, the company is starting to have a real impact on the fast-growing RISC-V community.

"We have successfully created the core architecture that the RISC-V community really wants – one that is fully customisable. No-one else has such a complex RISC-V core that can be totally configured to perfectly meet the specific needs of each project rather than having to use an off-the-shelf core and compromise." NE



# PCB MARKET CONTRACTION IN 2023

**TRENDFORCE'S LATEST forecast for the PCB market suggests that there will be a 5.2% contraction in the global PCB market for 2023, with the global market worth around $79 billion.**

**Over half of the PCB industry's end-use applications are in consumer electronics, so the economic slowdown has had a more pronounced impact on the PCB industry compared to other components, however, the automotive PCB market is expected to see strong growth, primarily driven by growing EV penetration and the electrification of vehicles.**

## TRENDFORCE IS PREDICTING PCB MARKET CONTRACTION IN 2023

**According to TrendForce there will be 14% annual increase in the automotive PCB market, reaching a value $10.5 billion in 2023, accounting for 13% of the total PCB market, which is up from 11% in 2022. By 2026, this figure is expected to grow to $14.5 billion with a total PCB market share of 15%.**

**EV adoption is a significant growth driver for the automotive PCB market, given average PCB values for a BEV are around 5 to 6 times that of a conventional fuel vehicle. Over half of these PCBs are installed in the BEV's control system, which houses the battery management system connected via a wire harness. Moreover, the growing popularity of automotive lightweighting is leading to a gradual shift toward the use of flexible printed circuits, which will further increase the PCB within the electric control system.**

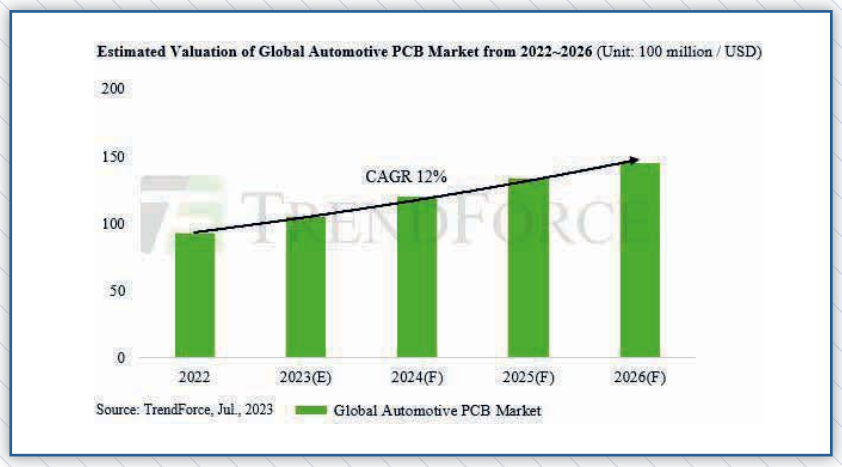


**The rise and adoption of autonomous driving tech means the integration of more cameras, radars, and other electronic devices, and that is expected to further boost the automotive PCB sector.**

**In the automotive space, PCBs mostly rely on 4 to 8-layer boards; autonomous driving systems often adopt higher-priced HDI boards, which are triple in price. HDI boards used in light detection and ranging systems, equipped in L3 and more advanced autonomous driving systems, can cost tens of dollars and are a major contributor to the automotive PCB market's future growth in value.**

**Looking at the types of PCBs, 4 to 8-layer boards are expected to account for about 40% of the total automotive PCBs by 2023, falling to 32% by 2026. In contrast, the proportion of HDI boards is projected to increase from 15% to 20%, and the proportion of FPC boards from 17% to 20%.**

# AMAZON TO BUILD SATELLITE HUB

**AMAZON IS** in the process of building a $120 million processing facility at NASA's Kennedy Space Center in Florida.

The facility is intended to manage the thousands of planned Kuiper internet satellites and the building is part of the $10 billion that Amazon has said that it plans to invest in its Kuiper project, a planned network of 3,200 low Earth-orbiting satellites designed to beam broadband internet globally.

## AMAZON BUILDING $120 MILLION SATELLITE PROCESSING HUB

The Kuiper internet network, which will largely compete with Starlink from Elon Musk's SpaceX, is expected to complement Amazon's web services powerhouse.

The facility will employ 50 staff and be a last stop for Amazon's Kuiper satellites before they go to space, after being manufactured at the Kuiper project's primary plant in Redmond, Washington. The building will include a ten-story-tall room that will allow the satellites to be fitted into rocket payload farings before launch.

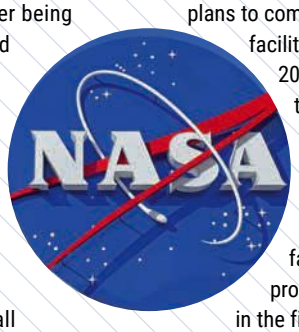


Amazon said that it plans to complete the facility by late 2024, with a target to ship the first batch of satellites to the facility for processing in the first half of 2025, according to Steve Metayer, Amazon's vice president of Kuiper Production Operations.

© hbw_images - stock.adobe.com

# CADENCE TO ACQUIRE RAMBUS PHY IP



**CADENCE DESIGN** Systems and Rambus, a chip and silicon IP provider, have entered into a definitive agreement for Cadence to acquire the Rambus SerDes and memory interface PHY IP business.

Rambus will retain its digital IP business, including memory and interface controllers and security IP. The expected technology asset purchase also brings

### ACQUISITION OF RAMBUS SERDES AND MEMORY INTERFACES IP

Cadence proven and experienced PHY engineering teams in the United States, India and Canada, further expanding Cadence's talent base.

Commenting Boyd Phelps, SVP and GM of the IP Group at Cadence said, "The acquisition of the Rambus PHY IP broadens Cadence's well-established enterprise IP portfolio and expands its reach across geographies and vertical markets, such as the aerospace and defence market, providing complete subsystem solutions that meet the demands of our worldwide customers."

"The accelerating momentum of AI and continued growth in the data centre is driving ever-increasing demand for memory and security," said Sean Fan, COO at Rambus. "With this transaction, we will increase our focus on market-leading digital IP and chips and expand our roadmap of memory solutions to support the continued evolution of the data centre and AI."

The transaction is expected to close in the third quarter of 2023.

# WORST OVER FOR GLOBAL MEMORY MARKET

**WHILE SAMSUNG** Electronics has reported that the worst is over for the global memory chip market it still plans to extend production cuts because the recovery in demand is largely constrained to high-end chips used in artificial intelligence.

The announcement came has Samsung reported a record $7 billion operating loss from its chip business in the first half of 2023. According to Samsung,

### SAMSUNG LOSSES MOUNT, BUT MEMORY MARKET SET TO RECOVER

while the business is likely to remain in the red in the current quarter, that loss is expected to fall significantly.

"Production cuts across the industry are likely to continue in the second half, and demand is expected to gradually recover as clients continue to destock their (chip) inventory," Samsung said.

Jaejune Kim, executive vice president of Samsung's memory business, said that Samsung would extend production cuts and make additional output adjustments for certain products including NAND flash chips, which are used to store digital data.

Samsung has benefitted from strong memory chip demand from AI, which led to higher-than-expected shipments of DRAM chips, but is still playing catch-up to SK Hynix, which was better prepared for AI-driven chip demand and leads the market in high-end DRAM chips such as high bandwidth memory (HBM) and premium DDR5 products used to feed data into AI chips.

Samsung said that it has had orders for more than 1.5 billion gigabytes of HBM products this year - double last year - and was working to increase supply capabilities.

## SHORTS

### CHIP PRODUCTION

Germany is to allocate €20 billion over the next four years from its €177.5 billion Climate and Transformation Fund budget to subsidise chip production. According to reports Intel is to get €10 billion for its two fab site at Magdeburg, while TSMC is to receive €5 billion for a €10 billion fab in Dresden.

### AGREEMENT

**onsemi and Magna have signed a long term supply agreement which will see Magna integrate onsemi's EliteSiC intelligent power solutions into the company's eDrive systems.**

### 5G CUSTOM CHIP

Intel is to work with Ericsson to make a custom chip for Ericsson's 5G networking gear. Intel said that it would be using its advanced "18A" manufacturing technology making this among the first chips from outside customers that will use the technology.

### PACKAGING PLANT

**TSMC has announced that it is to spend $2.87 billion to build a packaging plant in Taiwan. Construction will begin in the second half of next year and the plant will begin volume production in 2027.**

### WAFER SHIPMENTS

Figures from SEMI show that Q2 silicon wafer shipments were up 2.0% q-o-q to 3,331 million square inches but down 10.1% y-o-y from the 3,704 million square inches recorded in Q2 2022.



AUTHOR DETAILS
**Dave Betts,**
Chief science officer at audio software specialist AudioTelligence



TURN TO PAGE 32
**How sensing technologies deliver remote medical monitoring techniques**

# THE TESTING HIERARCHY



How to meet the challenge of assessing audio software, by DAVE BETTS

**Testing is a key aspect of a software engineer's work – both during development and when their code is integrated into a product. But the nature of audio means it presents unique testing challenges, which need to be considered to plan a successful testing process.**

Testing is an integral part of software development and software engineers understand the importance of testing their code during development, but the unique nature of audio means it presents special testing challenges for engineers.

So how do you assess audio software to give yourself the best chance of producing good audio in your end product?

While different versions of code can be compared simultaneously – when it comes to different audio outputs they have to be assessed sequentially, which makes comparisons not only harder but more time consuming. This will have an impact on your project planning. Further, subjective assessment of sound varies between individuals, which means the definition of 'good audio' will differ from one person to another.

Some subjective assessment by humans giving either a quantitative or qualitative response to your audio is essential. But should you use 'expert listeners' or the general public? Expert listeners have been trained in listening to audio and assess it using industry-standard criteria. They can detect problems, such as artefacts and distortions, which untrained listeners almost certainly could not hear. But the final users of your product will be untrained listeners who may not like the sound 'approved' by a set of expert listeners.

So, using only an expert panel could give you a product which no one actually wants. Conducting tests with a panel of the general public is important.

## LISTENING PANEL COMPOSITION

The composition of your listening panel is important. Will you include people who have some level of hearing impairment? If so, to what degree? If you're developing a hearing assistive product, having people with hearing impairment on your panel will be essential.

> "THE COMPOSITION OF YOUR LISTENING PANEL IS IMPORTANT. WILL YOU INCLUDE PEOPLE WHO HAVE SOME LEVEL OF HEARING IMPAIRMENT? IF SO, TO WHAT DEGREE?"

The panel should be asked to assess both the quality of the audio and its intelligibility. Audio quality is about the overall user experience, while intelligibility refers to how much of the speech the user can understand correctly without straining to hear. Setting these tuning parameters will almost certainly involve making some trade-offs. For example, intelligibility adjustments might reduce noise and so make the audio sound more processed. The more aggressively you reduce noise, the more you will introduce side effects – such as 'pumping' – into the sound you actually want.

What environment will you test in? Will it be an online or in-person test? If it's in-person, will you test in a controlled environment in a lab, or in the real world, letting end users hear the results in the scenarios for which the product was designed? Both have their place, and they are not mutually exclusive; the optimum is to do the controlled testing first, before taking the product out and about.

## OBJECTIVE TESTING

Objective tests solve some of these problems, but they have their own issues. They can be divided into performance metrics – signal-to-distortion ratio (SDR) and signal-to-interference ratio (SIR) – and intelligibility measures, such as short-time objective intelligibility (STOI), perceptual evaluation of speech quality (PESQ) and perceptual objective listening quality analysis (POLQA).

But beware – if you change your algorithm to improve the result on one of these metrics, it might change



© Stellan - stock.adobe.com

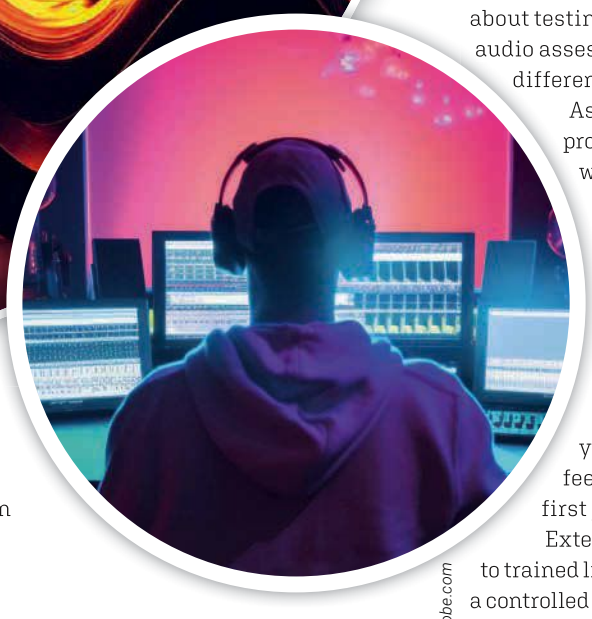

© Alex - stock.adobe.com

> "ARGUABLY THE MOST IMPORTANT TEST OF ALL IS TAKING YOUR PRODUCT OUT INTO THE WORLD TO BE TESTED BY REAL CONSUMERS."

the score on another metric. Consider the relative salience of the different metrics and their applicability in the environment in which your product will be used.

All these tests are 'intrusive', which means they require a 'ground truth' recording as well as the processed result. So, the procedure is:

Create your ground truth: record each sound source separately on your array in a low-noise environment, keeping all other environmental factors as similar as possible.

Artificially mix the individual source images to create a mixture: microphones are generally very linear over their dynamic range, so this is a safe approximation as long as you avoid clipping and very small, quantised values.

Process the mixture using your algorithms.

Calculate the desired performance metric by comparing algorithm output with the ground truth recordings.

But bear in mind:

- The ground truth needs to be time aligned with the processed version. Even a few ms discrepancy can damage the measure.
- Noises like cafe babble are diffuse and should be simulated on multiple loudspeakers, ideally with about twice the number of speakers as microphones.
- Real-world babble recorded in places such as busy cafes can be used to validate the performance you are getting with simulated diffuse noises.
- Use real human beings for at least some of the source image recordings, as people have different characteristics from loudspeakers and are generally less like a point source.
- You can vary the mixing ratios to extend the usefulness of your test dataset to varying acoustic scenes. Process some recordings of a full mix recorded in the field and perform listening tests to validate that in the real world.

## A TESTING HIERARCHY

To enable you to make the appropriate decisions about testing your audio, it is helpful to think about audio assessment as a hierarchy of different tests in different environments.

As you develop your product, your testing progresses from internal testing to working with end users in the real world. Choose the tests which you deem most appropriate to your product, bearing in mind the considerations outlined above.

To begin with, test internally, using an available automatic quality assessment algorithm. Then take recordings on your array and process them using your software. Ensure different people in your team listen to the results and give feedback. Then repeat this test using your first prototypes.

External tests progress from sending recordings to trained listeners, to getting trained listeners to test in a controlled environment, to testing with real people in a dedicated testing environment. But it may be enough to move from sending recordings to trained listeners to testing with real people in a test environment.

Arguably the most important test of all is taking your product out into the world to be tested by real consumers. But you cannot develop an audio product by moving straight to real-world tests because, in the early stages of development, you need to have repeatable tests – and that is only possible where you can control the environment.

Remember your final objective: producing a sound that the end users of your product will think is good enough to ensure the product's commercial success. Plan your testing methods and decide what is appropriate for your needs well before you start development. Include plenty of testing time at each stage of your project because it will all take longer than you think. NE

# EMA

ENGINEERING & MANUFACTURING AWARDS

## 13 SEPTEMBER 2023

LONDON MARRIOTT HOTEL, GROSVENOR SQUARE

# BOOK YOUR TABLE TODAY!

**Join us at the inaugural Engineering & Manufacturing Awards as we celebrate the very best in UK engineering.**

**Enjoy your evening with a specially prepared 3-course gourmet dinner and be entertained by our celebrity host!**

★ INDIVIDUAL SEAT **£395.00** ★

★ TABLE OF 10 **£2,975.00** ★ HALF TABLE (5 PEOPLE) **£1,750.00** ★

★ PREMIUM TABLE OF 10 (VERY LIMITED) **£3,695.00** ★

**The ticket price includes drinks reception, 3-course gourmet dinner with coffee and petit fours, half a bottle of wine per person. Premium tables also include branded meeting point on arrival, prime position and 2 bottles of fizz. There will be a cash bar in operation throughout the event for additional drinks.*

**www.engineeringmanufacturingawards.com**

SUPPORTING ORGANISATIONS

gtma Manufacturing Resource Centre | MAKE uk The Manufacturers' Organisation | MTA The Manufacturing Technologies Association

BROUGHT TO YOU BY MARK ALLEN

newelectronics | THE ENGINEER | MANUFACTURING MANAGEMENT | Eureka! | MACHINERY



# Sponsorship opportunities available!

For more details, please contact Marc Young

07967 169101

marc.young@markallengroup.com

## www.engineeringmanufacturingawards.com

CATEGORY SPONSORS

inenco Better Business Greener World · COMSOL · SOLIDWORKS · ipXchange The platform where technology and design combine. · Sage · PUBLITEK · acorn industrial services limited

# DELIVERING NEXT GENERATION SCANNERS

How edge processing is enabling next-generation millimetre wave scanners. By EAMON NASH

AUTHOR DETAILS

**Eamon Nash** is an applications engineering director at Analog Devices

**Millimetre wave (mmWave) imaging has become an important part of security scanning systems and, unlike traditional metal detectors, they can identify and locate both metallic and nonmetallic threats.**

A mmWave scanner system consists of an array of transmitters and receivers connected to a spatially dispersed antenna array. The system is analogous to a network analyser that is measuring return loss or S11. At any one time, one antenna in the array is transmitting a low power signal at a single frequency that reflects off the target and generates backscatter, although the transmitted signal is omnidirectional, so there will be reflections from multiple points on the target.

The phase and amplitude of the backscatter are measured by the receive antennas in the array.

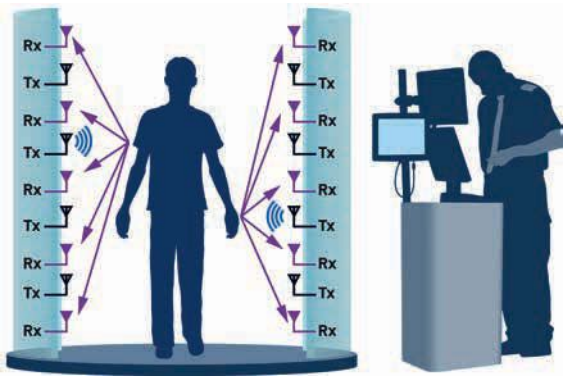


Figure 1. Operation of a mmWave security imaging system.

Polarisation may be used between the transmit and receive antennas to reduce direct transmit-to-receive leakage. Once this measurement is complete, the same signal is transmitted from another transmit antenna (at the same frequency) and the measurement process is repeated.

Because the depth of penetration of RF signals and the nature of the reflection varies with frequency, the scan is typically repeated at multiple frequencies, across a wide band. The resulting matrix of vectors forms a multidimensional array that is used to create an image that can identify objects that may be concealed.

The hardware required to complete such a scan must be multichannel and have a wide operating frequency range. The 10 GHz to 40 GHz frequency range is wide enough to differentiate the objects in a typical security scanning scenario. Higher channel count systems tend to have higher resolution, giving them the ability to identify small objects. Securing public buildings, for example, focuses more on the detection of larger items (e.g. weapons) so for these applications, a lower channel count is typically used.

Another critical component in these systems is fast switching time. This enables the realisation of scanning systems where the person being scanned only has to pose for a short amount of time. Next-generation walkthrough systems require faster switching times so that the person does not have to stop and pose.

Figure 2 shows how a mmWave imaging chipset from Analog Devices can be used to implement a complete mmWave scanner. An array of transmitters is driven from a central agile frequency source. An array of receivers detects the reflected signals and down converts them to a low intermediate frequency at which they are IF sampled by a multichannel continuous-time sigma-delta (CTSD) converter.

## TRANSMITTER

The transmitter consists of a large channel count of spatially dispersed antennas, each driven by a power amplifier. The ADAR2001 is a 4-channel transmitter that connects directly to the antennas and has an output frequency range of 10 GHz to 40 GHz. Because of the difficulty associated with distributing a 10 GHz to 40 GHz signal in a large array, it incorporates a 4× multiplier. As a result, all the plumbing and signal distribution in front of the transmitter ICs happens in the 2.5 GHz to 10 GHz frequency range.

The main RF elements of the ADAR2001 transmitter are an RF input buffer, a 4× frequency multiplier with integrated switchable harmonic filters, a 1:4 signal splitter, and four differential-out power amplifiers, which are intended to drive differential antenna structures such as dipole or spiral antennas. (See Figure 3)

A CW RF input signal between 2.5 GHz to 10 GHz and with a power level of at least –20 dBm is applied to the RFIN port. The broadband frequency multiplier consists of three parallel subcircuits. Each subcircuit (low band, mid band, high band) is optimised to multiply and filter a segment of the total frequency range. Switches at the input and output of the multiplier block are used to select the subcircuit for the desired frequency of operation.

The multiplier output passes

through a programmable attenuator before being split into four and applied to four power amplifiers. In addition to the configurable filtering in the multiplier block, each PA contains a low-pass/notch filter that can be enabled or disabled. For output frequencies up to 20 GHz, this filter should be enabled. Above 20 GHz, it should be disabled.

The programmable attenuator is used to help ensure relatively flat output power vs. frequency. This attenuator has approximately 15 dB of digital step attenuation range. As the output frequency sweeps from 10 GHz to 40 GHz, this attenuation should be decreased to maintain the desired output power flatness vs. frequency. This results in a nominal PA output power of +5 dBm on each of the differential PA outputs with harmonic suppression that ranges from –20 dBc to –30 dBc.

To do a complete 10 GHz to 40 GHz frequency sweep, the multiplier/filter block settings must be adjusted seven times to ensure optimum harmonic rejection and output power. In addition, while the system is dwelling at one frequency, each transmitter channel must be successively turned on and off.

To avoid creating a bottleneck of SPI commands, the ADAR2001 includes two state machines that can be preprogrammed with up to 70 states. Once the device's RAM has been programmed, state advances can be made with a simple pulse to the device's MADV (advance) pin. These features combine to ensure a 2 ns channel switching time. This switching time is also achievable when switching between ICs (for example, Channel 4 of Device A is switching off as Channel 1 of Device B is switching on). Because a full scan involves a full-channel sweep at multiple frequencies, switching time is critical.

The RF output power on each channel can be monitored using individual, on-chip RF detectors. Die temperature can also be monitored by an on-chip sensor. These sensors feed into a 5:1 analogue multiplexer, which passes the desired signal to an on-chip 8-bit ADC.

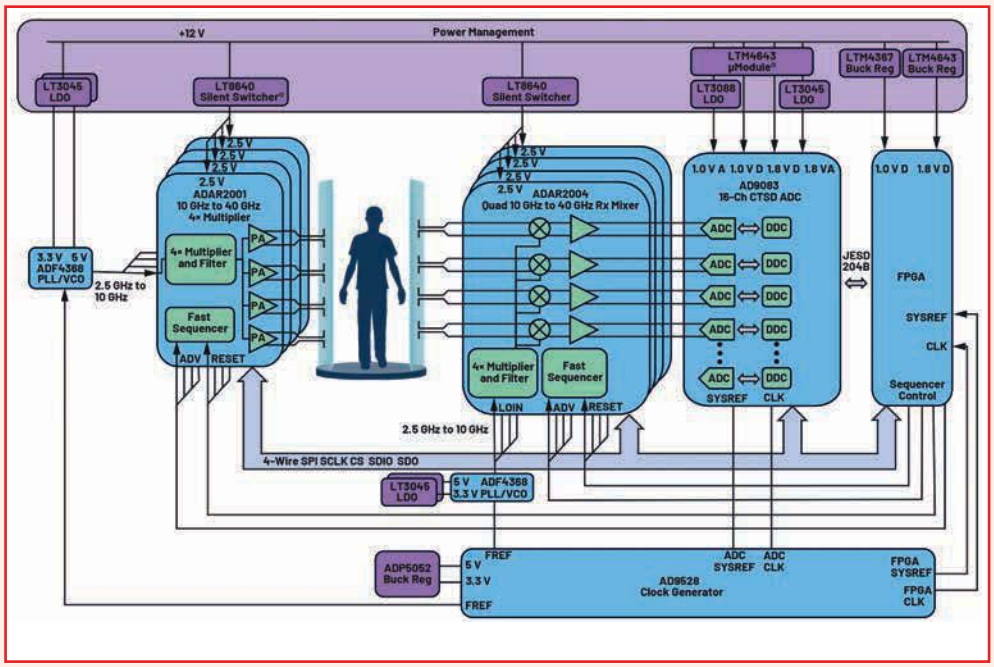


Figure 2: A complete mmWave imaging system.

The ADF4368 PLL/VCO provides the stimulus to the transmitter network. Its output signal will be split multiple times depending on the number of transmit channels. The ADF4368's relatively high output power of +9 dBm and the minimum input threshold of the ADAR2001 (–20 dBm) ensure that the ADF4368's output can be passively split many times before amplifier buffering is required.

The reflections from the transmission are picked up by the receivers, which are an array of multichannel mixers and ADCs. The ADAR2004 is a quad mixer and ADC driver with a digitally programmed gain amplifier (DGA). The LO input, which also has an internal 4× multiplier, is driven by a second PLL whose output frequency is offset from the radio frequency so that the mixer produces a real IF output. The IF outputs of the mixers are then sampled by the AD9083, a 16-channel continuous-time sigma-delta ADC with integrated digital down conversion. An IF sampling architecture was chosen over a zero-IF architecture to avoid DC offsets that result from LO leakage in the receiver and I/Q errors that result from imperfect quadrature balance in the LO's quadrature splitter. While these imperfections can be mitigated by calibration, calibration would be required at every input frequency because LO leakage and quadrature errors tend to vary with frequency.

Figure 4 shows a block diagram of the ADAR2004 quad mixer. The LO input is driven by a 2.5 GHz to 10 GHz sine wave that produces a 10 GHz to 40 GHz at the output of the multiplier. The multiplier output is fed to the four mixers that have a programmable gain on their IF outputs. Like the ADAR2001 transmitter, the ADAR2004 receiver also has two on-chip state machines that can be preprogrammed.

## MULTICHANNEL ADC

Figure 5 shows a block diagram of the AD9083, a 16-channel CTSD ADC. The ADC inputs are designed to have the same common-mode voltage as the IF outputs of the ADAR2004. This allows the mixer output and the ADC input to be connected directly. The absence of AC-coupling capacitors ensures that there are no charging/discharging transients when the mixer output switches abruptly (for example, during a frequency step at the input of the mixer).

The use of a first-order CTSD ADC architecture with an integrated

single-pole filter saves PCB space by minimising external filtering.

The architecture also enables a fast signal settling time when compared to the settling time of Nyquist rate converters, which require highly selective anti-aliasing filters to eliminate noise folding. Fast settling time is a key requirement in this application because the ADC settling time must be able to keep up with the fast channel switching on the transmit side.

Each ADC has a signal processing tile to filter out-of-band, shaped noise from the sigma-delta ADC and reduce the sample rate. Each tile contains a cascaded integrator comb (CIC) filter, a quadrature digital downconverter (DDC) with multiple finite input response (FIR) decimation filters (decimate by J block), or up to three quadrature DDC channels with averaging decimation filters for data gating applications. The presence of three quadrature DDC channels enables simultaneous demodulation of up to three frequencies.

Figure 3. The ADAR2001 10 GHz to 40 GHz transmitter.

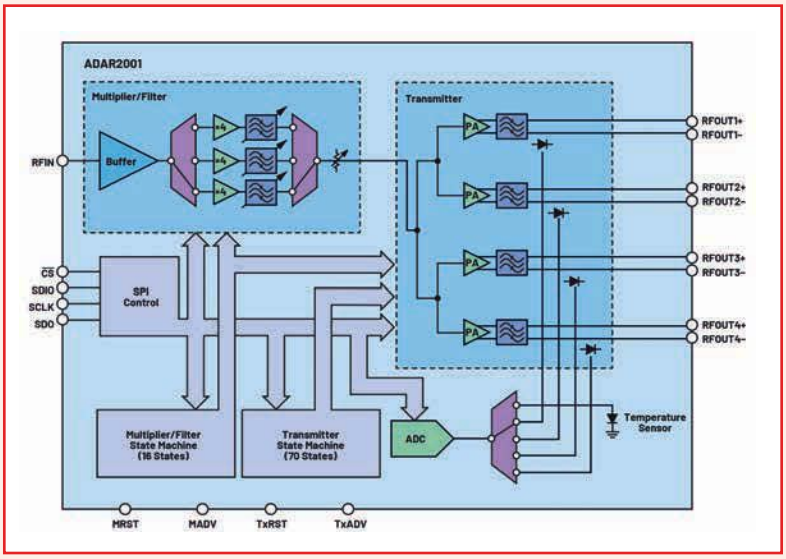


Figure 4. The ADAR2004 10 GHz to 40 GHz receiver block diagram.

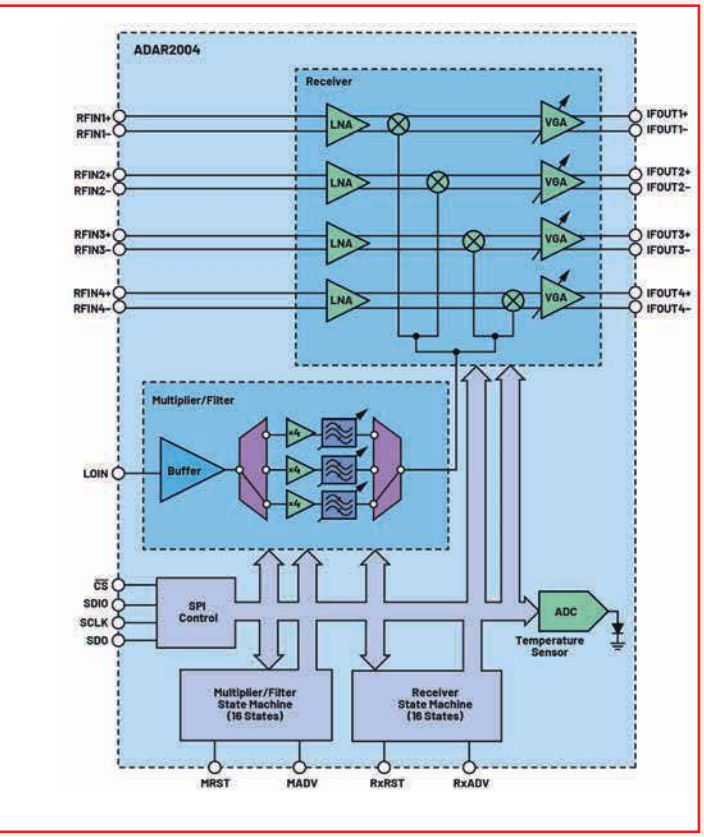


## SETUP AND OPERATION

The ADAR2001 and ADAR2004 were specifically designed for efficient operation in large arrays. Particular emphasis was placed on reducing wiring overhead. The RFIN and LO input ports of ADAR2001 and ADAR2004 can operate at input levels as low as –20 dBm. Because it is desirable to drive these inputs from a common LO source (the ADF4368 in this case), this low input sensitivity allows lots of passive fanout before amplification is required.

The advance and reset pins that drive the ADAR2001 and ADAR2004's on-chip sequencers are also designed to be driven in parallel to minimise the number of GPIOs the processor or FPGA must provide. By providing enough depth and complexity in the sequencers, it is possible to drive up to 16 ADAR2001 devices with a single set of advance and reset pulses.

Before operation, the ADAR2001 and ADAR2004's sequencers must be programmed. While it is possible to access the functionality of both devices using SPI commands, the associated latency would result in an unacceptably long overall scan time.

In setting up a 64-channel system (64-transmitter, 64-receiver) for a channel-based scan - we cycle through all of the transmit channels at a single frequency before incrementing the frequency and repeating the scan.

Figure 6 shows how the state machines in the 16 ADAR2001 devices are programmed to enable this sweep. A key goal of the architecture is to be able to sequence multiple devices that are doing different things from common control lines.

Notice in Figure 6 that while each IC has 65 states, most of the ICs are programmed to be in sleep mode (SLP) most of the time. For example, IC 1 is only fully active for the first four states as channels 1, 2, 3, and 4 of that IC sequentially transmit. During these four states, all the other ICs are either in SLP or ready (RDY) mode.

Likewise, IC 2 is only fully active during states 5 to 8 as all of the other ICs are either in SLP or RDY mode. By configuring the 16 state machines in this manner with their on cycles offset from one another, it is possible to drive the advance and reset lines of all 16 devices with parallel pulses.

The RDY mode is an intermediate state of what was developed to optimise switching time while saving power.

Because most of the transmitters are inactive most of the time, the SLP mode is key to keeping down power consumption. However, the time required to switch from SLP mode to transmit mode (50 ns) is excessive from a system

perspective and would result in delays during the scan. The RDY mode is an intermediate state that can be invoked when an IC is preparing to transmit. Notice in Figure 6 that in State 4, Channel 4 of IC 1 is transmitting, and IC 2 is being prepared for transmission by placing it in RDY mode. In the transition from transmitter states 4 to 5, IC 1 transitions from transmit mode to RDY mode, and IC 2 transitions from RDY to transmit mode. This transition takes 10 ns. The subsequent on-chip channel switches (that is, from Channel 1 to Channel 2 to Channel 3 to Channel 4 on IC 2) have a switching time of 2 ns. For a 1024-element array that sweeps from 10 GHz to 40 GHz in 0.1 GHz steps, the complete scan time would be less than 20 ms. This assumes a PLL lock time of 50 µs. If two PLLs operating in ping-pong mode were used to achieve faster frequency settling, the scan time would be well below 5 ms.

The operation and sequencing of the ADAR2004 receiver are less complex because it is typical practice to configure all the receiver channels to be receiving all the time. The state machines must still be sequenced so that the correct multiplier path and filter settings are chosen as the receiver sweeps in tandem with the transmitter.

As already noted, each AD9083 ADC channel can access up to three quadrature DDC channels. This means that it can simultaneously demodulate three frequencies, assuming that all three frequencies are within the input frequency range of the ADC's analogue input bandwidth (125 MHz).

To facilitate this approach on the transmit side, three transmit PLLs must be used instead of one. The three transmit frequencies must always be directed to different physical transmit ICs (the multipliers in the ADAR2001 cannot conduct multitone signals). The three frequencies must always be different but must remain close in frequency to one another as they sweep. For example, if one channel on one of the ADAR2001 devices is transmitting at 10 GHz, two other devices will be transmitting at 10.025 GHz and 10.050 GHz to support IF outputs at 50 MHz, 75 MHz, and 100 MHz.

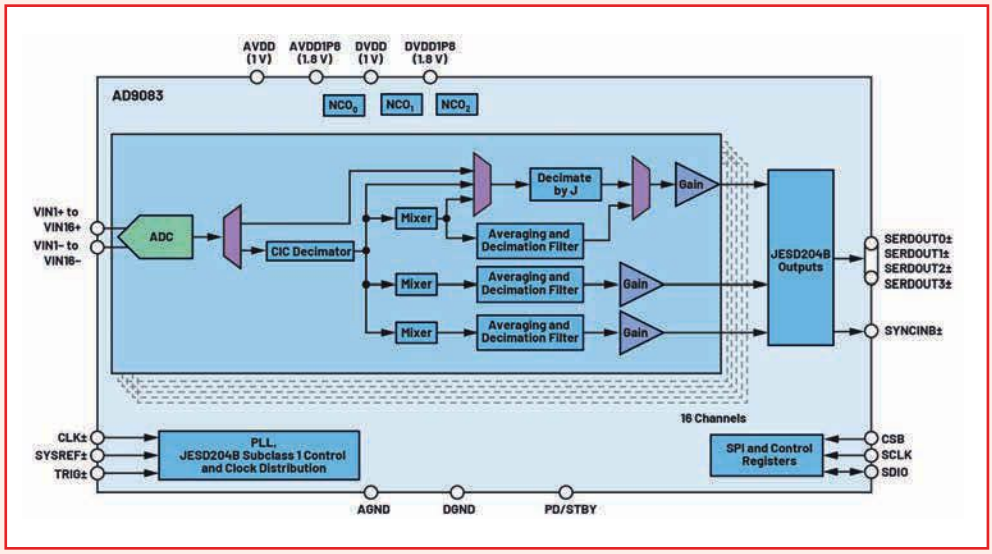


Figure 5. The AD9083 block diagram.

## CONCLUSION

The chipset consisting of the ADAR2001 quad transmitter, the ADAR2004 quad receiver, the AD9083 16-channel ADC, and the ADF4368 PLL/VCO provides the high level of integration and functionality that is necessary to implement next-generation walkthrough mmWave security scanners. Integrated state machines and on-chip digital downconversion significantly offload traditional centralised processing and move it to the Intelligent Edge. The net result is that the central processor has to worry less about controlling the system during a scan and the data that it receives is already demodulated and decimated.

While this chipset was developed specifically for mmWave security imaging applications, the wide frequency range of the ADAR2001 transmitter and ADAR2004 receiver as well as the level of integration of the AD9083 16-channel ADC, make this chipset useful in other applications where high channel density and fast switching are also required. NE

Figure 6. Programming 16 ADAR2001 transmitters for a channel sweep that is driven by a single advance pulse.

| Tx State | ADAR2001 IC Number | | | | | | | | | | | | | | | | Function |
|---|---|---|---|---|---|---|---|---|---|---|---|---|---|---|---|---|---|
| | 1 | 2 | 3 | 4 | 5 | 6 | 7 | 8 | 9 | 10 | 11 | 12 | 13 | 14 | 15 | 16 | |
| (Reset) | SLP | SLP | SLP | SLP | SLP | SLP | SLP | SLP | SLP | SLP | SLP | SLP | SLP | SLP | SLP | SLP | All sleep |
| 0 | | | | | | | | | | | | | | | | | |
| 1 | CH1 | SLP | SLP | SLP | SLP | SLP | SLP | SLP | SLP | SLP | SLP | SLP | SLP | SLP | SLP | RDY | IC 1 transmitting |
| 2 | CH2 | SLP | SLP | SLP | SLP | SLP | SLP | SLP | SLP | SLP | SLP | SLP | SLP | SLP | SLP | SLP | |
| 3 | CH3 | SLP | SLP | SLP | SLP | SLP | SLP | SLP | SLP | SLP | SLP | SLP | SLP | SLP | SLP | SLP | |
| 4 | CH4 | RDY | SLP | SLP | SLP | SLP | SLP | SLP | SLP | SLP | SLP | SLP | SLP | SLP | SLP | SLP | |
| 5 | RDY | CH1 | SLP | SLP | SLP | SLP | SLP | SLP | SLP | SLP | SLP | SLP | SLP | SLP | SLP | SLP | IC 2 transmitting |
| 6 | SLP | CH2 | SLP | SLP | SLP | SLP | SLP | SLP | SLP | SLP | SLP | SLP | SLP | SLP | SLP | SLP | |
| 7 | SLP | CH3 | SLP | SLP | SLP | SLP | SLP | SLP | SLP | SLP | SLP | SLP | SLP | SLP | SLP | SLP | |
| 8 | SLP | CH4 | RDY | SLP | SLP | SLP | SLP | SLP | SLP | SLP | SLP | SLP | SLP | SLP | SLP | SLP | |
| 9 | SLP | RDY | CH1 | SLP | SLP | SLP | SLP | SLP | SLP | SLP | SLP | SLP | SLP | SLP | SLP | SLP | IC 3 transmitting |
| • | • | • | • | • | • | • | • | • | • | • | • | • | • | • | • | • | |
| • | • | • | • | • | • | • | • | • | • | • | • | • | • | • | • | • | |
| 60 | SLP | SLP | SLP | SLP | SLP | SLP | SLP | SLP | SLP | SLP | SLP | SLP | SLP | SLP | CH4 | RDY | |
| 61 | SLP | SLP | SLP | SLP | SLP | SLP | SLP | SLP | SLP | SLP | SLP | SLP | SLP | SLP | RDY | CH1 | IC 16 transmitting |
| 62 | SLP | SLP | SLP | SLP | SLP | SLP | SLP | SLP | SLP | SLP | SLP | SLP | SLP | SLP | SLP | CH2 | |
| 63 | SLP | SLP | SLP | SLP | SLP | SLP | SLP | SLP | SLP | SLP | SLP | SLP | SLP | SLP | SLP | CH3 | |
| 64 | RDY | SLP | SLP | SLP | SLP | SLP | SLP | SLP | SLP | SLP | SLP | SLP | SLP | SLP | SLP | CH4 | |

# NEXT GEN COOLING TE

**WITH NEXT-GENERATION electronics featuring smaller and more powerful components, new solutions for cooling will be required. A new thermoelectric cooler developed by Penn State scientists has greatly improved the cooling power and efficiency compared to current commercial thermoelectric units and may help control heat in future high-power electronics, according to the researchers involved.**

**"Our new material can provide thermoelectric devices with very high cooling power density," said Bed Poudel, research professor in the Department of Materials Science and Engineering at Penn State.**

**Thermoelectric coolers transfer heat from one side of the device to the other when electricity is applied, creating a module with cold and hot sides. Placing the cold side on electronic components that generate heat, like laser diodes or microprocessors, can remove excess heat and help control the temperature. However, as those components become more powerful, thermoelectric coolers will also need to pump more heat.**

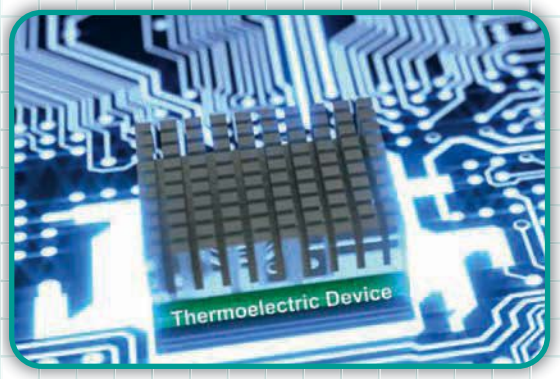


**HIGH-POWER THERMOELECTRIC DEVICE TO PROVIDE COOLING FOR NEXT-GEN ELECTRONICS**

**Penn's new thermoelectric device showed a 210% enhancement in cooling power density compared to the leading commercial device, made of bismuth telluride, while potentially maintaining a similar coefficient of performance (COP), or the ratio of useful cooling to energy required.**

**"This solves two out of the three big challenges in making thermoelectric cooling devices," said Shashank Priya, vice president for research at the University of Minnesota.**

**"First, it can provide a high cooling power density with a high COP. This means a small amount of electricity can pump a lot of heat. Second, for a high-powered laser or applications that require a lot of localised heat to be removed from a small area, this can provide the optimum solution."**

**The device is made from a compound of half-Heusler alloys, a class of materials with special properties that show promise for energy applications like thermoelectric devices. These materials offer good**

# H2 MOLECULES SIMULATED

**QUANTINUUM, THE** quantum computing company, has become the first to simulate a chemical molecule by implementing a fault tolerant algorithm on a quantum processor using logical qubits in a move that will help to speed up molecular discovery, with better modelling of chemical systems, reducing the time to generate commercial and economic value.

Scientists used three logical qubits on Quantinuum's H1 quantum computer to calculate the ground state energy of the hydrogen molecule ($H_2$) using an algorithm for early fault tolerant devices called stochastic quantum phase estimation.

**QUANTUM CHEMISTRY PROGRESSES TOWARDS FAULT TOLERANT REGIME USING LOGICAL QUBITS**

It is already known that many algorithms that can be used on today's "NISQ" era quantum computers will not scale to larger problems. The phase estimation technique used in this experiment with logical qubits has better potential to scale but is challenging to implement on today's quantum computers because it requires very complex circuits, which are prone to failing due to noise.

Commenting Dr Raj Hazra, CEO of Quantinuum, said, "We've turned a page for quantum chemistry on quantum computers, moving us towards the era of early fault tolerance. It was made possible thanks to the H1 quantum computer which brings together high-fidelity gate operations, all-to-all connectivity and conditional logic, with the truly world-leading algorithms, methods and error handling techniques offered by our InQuanto chemistry platform."

In a scientific preprint paper, "Demonstrating Bayesian Quantum Phase Estimation with Quantum Error Detection", the team of scientists led by Dr Kentaro Yamamoto report they have overcome this challenge by creating and using logical qubits achieved with a newly developed error detection code designed for the H-series quantum hardware. The code saved quantum resources by immediately discarding a calculation if

CHNOLOGY

strength, thermal stability and efficiency.

The researchers used a special annealing process that allowed them to modify and manipulate the microstructure of the material to remove defects.The process also dramatically grew the grain size of the material, leading to fewer grain boundaries — areas in a material where crystallite structures meet and that reduce electrical or thermal conductivity.

"In general, half-Heusler material has very small grain size — nano-sized grain," said Wenjie Li, assistant research professor in the Department of Materials Science and Engineering at Penn State. "Through this annealing process we can control the grain growth from the nanoscale to the microscale — a difference of three orders of magnitude."

Reducing the grain boundaries and other defects substantially enhanced carrier mobility of the material, or how electrons can move through it, yielding a higher power factor, the scientists said. The power factor determines the maximum cooling power density and is especially important in electronics-cooling applications.

In addition to the high-power factor, the materials produced the highest average figure of merit, or efficiency, of any half-Heusler material in the temperature range of 300 to 873 degrees Kelvin. The scientists said the results show a promising strategy for optimising half-Heusler materials for near-room-temperature thermoelectric applications.

it detected qubits that had produced errors during the computation process.

When combined with the low noise of the H-Series hardware and the capabilities of the Quantinuum Software InQuanto, they were able to run these complex circuits for the first time, producing more accurate simulation results than those achieved without the error detection code. Creating and using logical qubits with error detection is a prerequisite for the more advanced error correction, which provides real-time protection for a quantum computer against various forms of "noise".

For scientific researchers and industrial enterprises in sectors such as healthcare, energy, automotive and manufacturing, who invest heavily in researching future molecules and materials, this demonstration implies that the time to useful quantum computing is getting nearer.

This demonstration, which was run on Quantinuum's System Model H1 quantum computer, will be integrated into future versions of its quantum computational chemistry platform, InQuanto, allowing industrial companies and academic researchers to explore the use of early fault-tolerant algorithms run on quantum computers for material and molecular modelling.

# SEMIMETAL KEY TO REDUCING ENERGY CONSUMPTION

**NEW MATERIAL COULD HOLD KEY TO REDUCING ENERGY CONSUMPTION IN COMPUTERS AND ELECTRONICS**

**A UNIVERSITY** of Minnesota Twin Cities team has synthesised a thin film of a unique topological semimetal material that has the potential to generate more computing power and memory storage while using significantly less energy.

The research comes at a time of growing interest into developing materials that power electronic devices. While traditional semiconductors are the technology behind most of today's computer chips, scientists and engineers are looking for new materials that can generate more power with less energy to make electronics better, smaller, and more efficient.

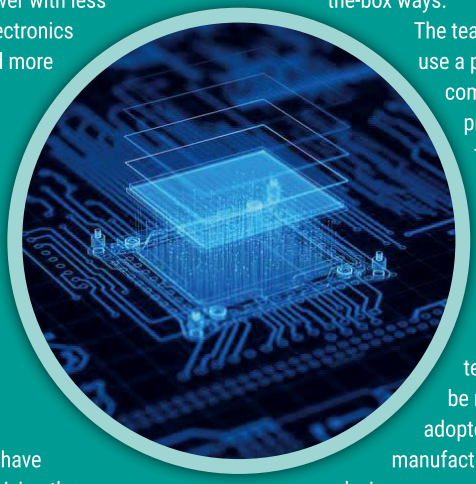

One such candidate for these new and improved computer chips is a class of quantum materials called topological semimetals. The electrons in these materials behave in different ways, giving the materials unique properties that typical insulators and metals used in electronic devices do not have. For this reason, they are being explored for use in spintronic devices, an alternative to traditional semiconductor devices that leverage the spin of electrons rather than the electrical charge to store data and process information.

In this new study, the Minnesota researchers were able to successfully synthesise such a material as a thin film, and prove that it has the potential for high performance with low energy consumption.

"This research shows for the first time that you can transition from a weak topological insulator to a topological semimetal using a magnetic doping strategy," said Professor Jian-Ping Wang, University of Minnesota Department of Electrical and Computer Engineering. "We're looking for ways to extend the lifetimes for our electrical devices and at the same time lower the energy consumption, and we're trying to do that in non-traditional, out-of-the-box ways."

The team is the first to use a patented, industry-compatible sputtering process to create this semimetal in a thin film format. Because their process is industry compatible, Wang said, the technology can be more easily adopted and used for manufacturing real-world devices.

Because the researchers fabricated such a high-quality material, they were also able to closely analyse its properties and what makes it so unique.

"One of the main contributions of this work from a physics point of view is that we were able to study some of this material's most fundamental properties," said Professor Tony Low. "Normally, when you apply a magnetic field, the longitudinal resistance of a material will increase, but in this topological material, we have predicted that it would decrease. We were able to corroborate our theory to the measured transport data and confirm that there is indeed a negative resistance."

> "IOT PRODUCTS WITH INNOVATIVE COMPUTER VISION TECHNOLOGIES ARE TRANSFORMING THE WORLD AROUND US AND DELIVERING NEW EXPERIENCES IN DIVERSE ENVIRONMENTS"



How embracing standardisation will help to unlock and accelerate growth in IoT development. NEW ELECTRONICS investigates

# EMBRACING STANDA

**More and more new devices are being designed with the aim of simplifying the development of IoT and industrial IoT solutions.**

Last year saw the launch of the Matter standard, developed within the Connectivity Standards Alliance by a consortium of industry leaders, to ease device interoperability in the smart home.

The aim of the standard being to enable devices from different brands and ecosystems to seamlessly, reliably and securely communicate and in the process freeing consumers from ecosystem restraints.

Consumers will now be able to select devices based on desired features - whether a smart plug, smart lighting, or low-power smart devices and sensors - rather than having to consider complex or confusing connectivity requirements.

"The next generation of consumer and industrial devices needs the right combination of advanced MCUs and secure connectivity across the most important protocols, whether that's Thread, Wi-Fi, Bluetooth and now Matter. Combining edge processing capabilities with advanced security simplifies overall designs, reduces complexity and enables smart device manufacturers to bring innovative, next-generation products to market faster," said Larry Olivas, Vice President and General Manager for Wireless Connectivity Solutions, NXP Semiconductors.

To that end, developers have been capitalising on major IoT growth opportunities across all sectors. To date, many connected devices are voice-enabled, but now the industry is seeing the next wave of IoT – which is giving rise to vision-enabled devices.

"IoT products with innovative computer vision technologies are transforming the world around us and delivering new experiences in diverse environments from retail to smart home, thanks to their ML capabilities," said Paul Williamson, SVP and GM, IoT Line of Business, Arm.

"We are seeing a range of companies looking to build transformative, smart and secure vision devices. However, to capitalise on these new intelligent, ML-capable endpoint devices, developers must use standards to accelerate time to market and unlock true value for end users."

## ACCELERATING IOT DEVELOPMENT

According to Williamson, the traditional embedded IoT device market is changing into a new services-oriented model, where devices are connected, smart and can capture insights that deliver business value and efficiency.

"This is a generational change in requirements and existing device vendors need to adapt to this model as well as new entrants," he believes.

But, with the growing number of IoT devices, there is also a growing number of connections, as developers try to address the growing demand for compute across all markets.

"Into such a fast-moving environment fragmentation can creep causing several negative implications, from costly software development to longer time to market. But, fortunately, there are several industry initiatives focused on creating a consistent set of standards to address challenges such as fragmentation and poor interoperability," said Williamson.

And, as the IoT starts to rally around standards-based initiatives like Matter, Arm is among a growing number of companies that are working with its ecosystem to ensure common technologies are easily adoptable and scalable, so developers can instead focus on differentiation at the application layer for every manner of IoT use case.

As mentioned earlier, the Matter protocol is intended to solve the problem of interoperability for smart home devices. It is an application layer protocol that abstracts the underlying connectivity technologies such as Wi-Fi, Thread and Bluetooth LE.

"With the release of the Matter v1.0 SDK, Arm is working with the Connectivity Standards Alliance to ensure the ecosystem supports OEMs and other product developers in building these devices and collaborating on non-differentiating software also reduces integration overhead for developers and frees up resources to focus on differentiation and innovation," said Williamson.

Arm SystemReady, for example, which was



DID YOU KNOW?

**16bn** The number of connected IoT devices currently in operation worldwide

# RDISATION

©elenabsl - stock.adobe.com

introduced in 2020, ensures operating system portability across a wide range of Cortex-A based devices by defining common boot standards and system architecture requirements.

"Adoption has been rapid and vast and there have now been over 100 certifications to date from industry leaders including ADLINK, Advantech, Arduino, ASUS, Eurotech, Kontron, NXP, Raspberry Pi, Renesas, Rockchip, and STMicroelectronics. It is crucial that we continue this industry collaboration to ensure OS portability while also raising the bar on security," added Williamson.

## SECURING DATA

Securing the data will be one of the greatest technology challenges over the next decade of compute.

Governments now see device security as a critical national security issue and are looking to regulate the space. Consequently, cyber bills are front of mind for industry leaders, particularly EU legislation which will have a huge impact for businesses inside and outside of the European Union.

"We've been championing this cause for two decades, and here in 2023 we're at a crunch point where regulation is changing how the technology ecosystem needs to engage with securing devices. Regulation, such as the EU Cyber Resilience Act, mandates that the next generation of devices be secure and updatable for the device's lifetime," Williamson explained.

A growing number of companies are developing security solutions specifically designed for internet connected devices which tend to have a very small area footprint and have limited resources against current and future threats.

As the number of connected devices, machines, and sensors fuelling the Internet of Things (IoT) expands, each one represents a potential entry point for malicious intrusion.

The need for digital trust has therefor never been greater, what with new government legislation, safety regulations and higher security requirements.

"Security isn't just an add-on that you can put into devices later; it must be built into the devices from the ground up in both hardware and software," said Wiliamson.

"Secure boot is critical, and Arm SystemReady combined with APIs from PSA Certified helps define a common boot standard, which if adopted at scale, will dramatically improve the quality of security in devices."

PSA Certified is a global partnership of security-focussed companies who are proactively building security best practices into devices at scale.

Its security framework and independent third-party evaluation scheme was originally spearheaded by Arm and six other security ecosystem leaders and is now maintained by Applus+ Laboratories, CAICT, ECSEC Laboratory, ProvenRun, Riscure, SGS Brightsight, Serma, TrustCB, and UL who between them are providing the resources needed to build upon the Root of Trust.

PSA Certified has scaled to become one of the fastest growing, most valued security ecosystems, globally and it has played a leading role in uniting industry, standards bodies, regulators and insurers together under one initiative.

PSA Certified has helped to accelerate the cross-industry collaboration required to untap the full potential of the IoT and is now approaching 150 certifications from over 85 partners, protecting consumers from the most common hacks.

"If you are an existing device vendor looking to scale connected devices, it is no longer deploy-and-forget. Programs like PSA Certified ensure best-in class security for connected devices, providing documentation, reference implementations, access to open-source security related APIs, and a certification programme," said Williamson.

There is no sign that the diversity and pace of innovation in the IoT space is going to slow down any time soon. In fact, as of 2023, there are now double the number of internet connected devices – 16 billion – than people on the planet.

However, despite this surge in popularity, coupled with new levels of interoperability, we will only really see the benefits of this rapid growth in the IoT if developers are able to strike the right balance when it comes to standardisation and differentiation. NE



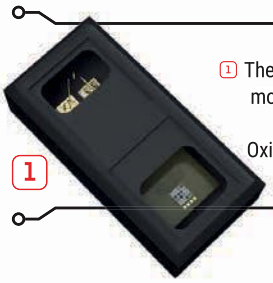

1 The OB1203 sensor module featured in Renesas' Smart Oximeter reference design

AUTHOR DETAILS
**Borut Kastelic,** Business Development Manager for Medical, EBV

DID YOU KNOW?
**$24bn** The value of the remote medical market in 2029

# TIMES ARE CHANGING



How are new sensing technologies helping to deliver remote medical monitoring techniques and improve a patient's quality of life? BORUT KASTELIC explains

**The acquisition of data relating to vital signs - such as heart rate, breathing capacity, blood oxygen levels and temperature - is a fundamental part of providing appropriate healthcare to the public.**

This can be used either as a precautionary tactic to uncover potential issues as they arise and then aid rapid diagnosis, or to assess the severity and subsequently control an existing medical complaint.

Traditionally, this type of monitoring has been carried out under supervision, often within a clinical environment. Times are changing, however, and this is leading to a new approach being taken in relation to these activities in which remote monitoring is now becoming an invaluable tool to the medical profession.

Several dynamics are driving the move away from clinically-based monitoring towards undertaking such work remotely.

For those with long-term medical conditions, the emphasis is on improving quality of life. There are significant benefits in enabling people to remain in their own homes for longer, with medical interventions in hospitals or other facilities only being taken when absolutely necessary.

Staying in familiar surroundings can reduce stress and anxiety, as well as reducing risk of infection or injury caused by vulnerable patients having to travel long distances to attend repeat appointments. Allied to this is the need to take the pressure off overloaded central health services and free up skilled staff and bed spaces for patients who genuinely require dedicated care.

Furthermore, people are in general terms becoming more health aware than they were in the past. Consequently, they want to have more involvement in controlling their own wellbeing. The ability to monitor their biorhythms conveniently and without hospital appointments is therefore highly attractive.

A shift in age demographics is also going to make remote monitoring more of a necessity in the future, as the world comes to terms with having an increasingly elderly population. According to the World Health Organisation (WHO), the percentage of people over 60 years old will have doubled by 2050, and the number of people over 80 will have tripled.

Having access to regularly updated information on health-related parameters, which are taken from the home environment, will play a key role in keeping older people healthy for longer. It can also contribute to individuals retaining independent living.

## SENSING TECHNIQUES

A series of sensing methodologies have emerged via which remote medical monitoring can be done. These offer the accuracy, simplicity of implementation and portability that such applications clearly mandate. Some of them are already established, while others are just starting to be explored.

**Photo-plethysmography (PPG) -** This is a straightforward and inexpensive optical technology via which non-invasive measurements may be taken. It is typically applied to patients' fingertips, earlobes or wrists. LEDs emit light that is incident on the subject's skin and then the accompanying photodiode measures changes in light intensity caused by blood volume or oxygen content. PPG can be utilised for measuring heart rate, respiratory rate (RR) and heart rate variance (HRV), as well as acting as a pulse oximeter to determine peripheral capillary oxygen saturation (SpO2). With the correct algorithms, it is also possible to use PPG for blood pressure measurements.

However, the downside of this technique is that it is known to be affected by body movement. This has been detrimental to its accuracy when applied in a wearable context. Advances in relation to the emitters and receivers, improved algorithms and better noise mitigation within the signal chain have been achieved in recent years, contributing to making PPG better suited to remote monitoring of vital signs.

**Electrocardiogram (ECG) technology -** This is a well-established means of detecting the electrical signals of the heart each time it beats. It is typically used to identify irregularities - such as arrhythmia, atrial fibrillation (which is a common cause of strokes) and cardiomyopathy. Traditional ECG machines were

© Vector Archive - stock.adobe.com

> THERE ARE SIGNIFICANT BENEFITS IN ENABLING PEOPLE TO REMAIN IN THEIR OWN HOMES FOR LONGER, WITH MEDICAL INTERVENTIONS IN HOSPITALS OR OTHER FACILITIES ONLY BEING TAKEN WHEN ABSOLUTELY NECESSARY



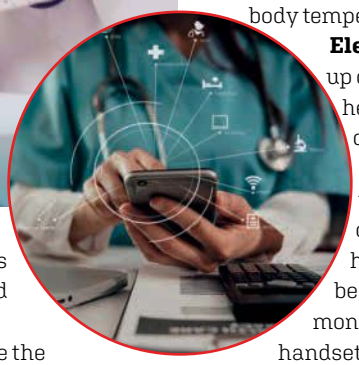

expensive and bulky, so these tests needed to be carried out in a hospital environment. While the testing itself normally lasted just a few minutes, the disruption for the patient could be considerable. Early attempts to evolve the technology for personal use included experimentation in developing a t-shirt that incorporated distributed ECG sensors.

Within the last decade, miniaturisation and the arrival of more energy-efficient sensors have led to this technology being successfully adapted for wearable usage (such as in smart watches and fitness bands). ECG readings can now be taken simply by maintaining contact with a smart portable device, usually through the finger. Wireless connectivity also makes it possible to share results remotely with qualified medical personnel located back at the clinic/hospital.

**Temperature monitoring -** Though often overlooked, this is a critical indicator of a patient's state of health. The recent COVID pandemic was a prime example, and accelerated the need for accurate, non-contact temperature monitoring on a mass scale. At an individual level, small, medical-grade temperature sensors are already available for measuring surface skin temperature. Skin temperature data is then calibrated to estimate actual body temperature. This avoids the insertion of a thermometer and enables constant monitoring. Nevertheless, it must be acknowledged that there are still some obstacles to overcome. Ways to apply this type of sensor reliably inside the ear (via earbuds) are currently being investigated, as the skin temperature here is more stable and nearer to actual body temperature.

**Electrochemical sensors** - These can pick up certain biomarkers. There is potential here for them to help expedite cancer diagnoses, as well as better detection and control of conditions like diabetes. This technology is already deployed in fitness devices for sweat monitoring (as a general health indicator), and some success has been seen in the development of glucose monitoring devices paired to smartphone handsets. There are challenges that remain in other medical applications though. Among these are the ability to collect adequate sweat samples, the need to be able to detect multiple indicators with just one sensor (as no single analyte alone can provide a clear indicator of overall health), and lack of clinical data regarding the correlation between analyte levels in blood and analyte levels in sweat.

**Fibre Bragg Gratings (FPGs)** - Already a part of medical analysis within clinical settings, there could be potential for this technology to also be employed in remote monitoring hardware too (offering a prospective high precision alternative to the existing optically-oriented sensing mechanisms used). FPGs are made by laterally exposing the core of a single-mode fibre to a periodic pattern of intense laser light and then measuring the incremental differences in light levels.

## THE SUPPORTING ELECTRONICS

In terms of the electronics hardware utilised for measuring the different human health parameters just discussed, equipment manufacturers need to be able to source the most effective solutions. These must offer clear performance advantages, while also being compact and power efficient (given the portable, battery-powered nature of the equipment they will be featured in). In addition to all this, they must be placed at attractive price points, so that the cost-sensitivity associated with many of these applications is respected.

Thanks to strong relationships with well-known vendors, EBV Elektronik has developed an extensive product portfolio relating to these applications includes the latest innovations in optoelectronics, thermal sensors, microcontrollers, NFC connectivity and BLE communications.

With extensive I/O capabilities, the AS7050 bio-signal sensor analogue frontend from ams OSRAM can deal with 8 LED outputs and the inputs of 6 photodiodes. It supports PPG and ECG operations, plus temperature measurement via its integrated NTC. It is suitable for use in consumer wearables, as well as medical monitoring patches.

Renesas' Smart Oximeter reference design with accompanying mobile app provides OEMs with a complete solution that is easy to integrate into their equipment. It is comprised of a small form factor bio-sensing board (measuring just 4.2mm x 2mm x 1.2mm) which features the company's multifunction OB1203 sensor module. Through this, heart rate, pulse oximetry and SpO2 data can be acquired. A BLE transceiver element enables wireless data transfer.

## THE FUTURE PERSPECTIVE

The market for remote medical sensing technology is growing dramatically, influenced by greater health awareness, an ageing population and only finite clinical resources available to address ever increasing demands. The emergence of consumer wearables, for general health monitoring and fitness tracking, is also raising expectations.

Access to higher performance sensors and signal conditioning devices, combined with more sophisticated algorithms, will mean that the results obtained via wearable equipment will get closer to emulating those derived from clinical-grade instrumentation. NE



UNIVERSITIES & RESEARCH



# AEROSPACE RECEI

## NEW UNIVERSITY OF SHEFFIELD AMRC INNOVATION FACILITY AND BOEING RESEARCH PROGRAMME



*Chancellor of the Exchequer, Jeremy Hunt visiting the University of Sheffield AMRC's Factory 2050 facility in Sheffield, accompanied by AMRC CEO Steve Foxley*

**AN £80M boost to composites research and development for aerostructure manufacturing in the UK has been announced, with a new research facility set to be built in South Yorkshire that has aerospace giant Boeing as its first major research partner.**

**The University of Sheffield Advanced Manufacturing Research Centre (AMRC) has secured £50m to establish the Compass (Composites at Speed and Scale) facility in Sheffield to enable a research programme with Boeing at the centre. The investment was announced by UK Chancellor Jeremy Hunt, as part of the South Yorkshire Investment Zone.**

**Compass is a major boost to aerospace research and development for the UK and will look to address composites manufacturing challenges to meet future demand for lighter commercial aircraft and help the aviation industry reach net zero.**

**The facility will be home to AMRC's largest ever collaborative research and development programme with founder and long-standing member Boeing, which will be in partnership with Spirit AeroSystems and Loop Technology. It aims to de-risk and develop high-rate sustainable structures, with the potential to reduce large component process times from ~40 hours to ~four hours.**

**On the back of the research, Boeing has committed to procuring in excess of £2 billion of UK-manufactured goods for export per year to support the production of the company's next civil passenger aircraft, creating thousands of highly skilled jobs in the process.**

**Compass builds on the AMRC's composites and automation capabilities to de-risk the development and manufacture of high-**

# ENGINEERING FOR PEOPLE DESIG

## ENGINEERS WITHOUT BORDERS UK

## WINNERS ANNOUNCED BY ENGINEERS WITHOUT BORDERS UK

Borders UK, part of an international movement putting global responsibility at the heart of engineering, has announced the UK and Ireland winners of the Engineering for People Design Challenge 2022/2023.

The Engineering for People Design Challenge is an international venture organised jointly by Engineers Without Borders South Africa and UK in conjunction with educators. The awards are open to first- and second-year undergraduates as a mandatory part of their degree course. The aim is to encourage young engineers to broaden their awareness of the social, environmental and economic implications of their engineering solutions.

Participants this year were asked to consider the engineering challenges and opportunities found in Govan, an area with a rich history, heritage and physical landscape situated on the waterfront of the River Clyde in the south-west of Glasgow, Scotland.

With more than 30 participating university teams, the winning project from University of Greenwich impressed the judges with their concept: 'Health Pod', which aims to tackle food insecurity and inaccessibility to healthcare in Govan. The winners receive a Grand Prize of a £1000 educational bursary.

Commenting Tom Whitehead, Programme Activities Coordinator for Engineers Without Borders UK, said, "This project perfectly represented the ethos of the design challenge. The team considered how one space could be used to meet multiple challenges facing the area, giving great thought to the needs of the diverse community in Govan."

With their innovative design for a hydroelectrically-powered greenhouse space, the team from Manchester Metropolitan University secured second prize. Judges praised the team's consideration of the local geography in the development of the design, and particularly liked that the team had given thought to how food could be distributed to the community using e-bikes.

The Peoples' Prize, which was voted on by the public, went to Nottingham Trent University for their design to implement aeroponics (a smart farming technique) using shipping containers.

The runner-up and the

# VES £80M BOOST

rate, large-scale composite parts, providing the wider UK industry with an open-access facility to develop, demonstrate, test and validate new composite manufacturing technologies and capabilities.

Steve Foxley, chief executive officer at the AMRC, said, "This facility, and the research that will take place there, offers a step-change in UK R&D capability and provides a unique opportunity for the UK.

"It will support and de-risk new technologies and processes, combining composites and digital technologies to help wider UK industry adopt more efficient, sustainable and cost-effective solutions for the production of future components, including the renewable, transport, defence and urban air mobility sectors."

The building will be home to a raft of state-of-the-art equipment secured through a £29.5m grant from the Aerospace Technology Institute (ATI) to support new capabilities, technologies and processes to reduce cost, waste, production time and associated carbon emissions.

Compass will look to push the boundaries of existing science and technology, enabling automation of layup of large-scale composite components to move beyond existing capabilities.

Drawing on relevant state-of-the-art R&D with industry, it will enable run-at-rate demonstration of large-scale automated manufacturing processes; develop precise pick and place and in-line inspection technologies to support tolerances required by aerospace; develop a digital twin of the facility and process; use fully-sensored processes and equipment, linked together in a flexible control architecture, providing a single source of truth for the validation of parts/processes, and enabling active control responding to changing process environments and, the data, gathered over time, will enable future research in artificial intelligence and machine learning techniques for factory-scale process optimisation.

# N CHALLENGE 2022/2023

People's Prize winners each receive a £500 educational bursary to share between their teams.

The design brief for the Engineering for People Design Challenge is developed in collaboration with a different community partner each year, to ensure a holistic view of the community being presented. This year's partner was Govan Community Project, an organisation founded as a community response to the needs of people seeking asylum in Glasgow. They work in south-west Glasgow to achieve social justice in the Greater Govan area by building a strong community based on equality, mutual respect, support and integration.

John Kraus, Chief Executive Officer of Engineers without Borders UK said, "This year was particularly special. For the first time, the Grand Finals and awards took place in the home city of our community partner. More than ever before, students could experience first-hand the place where their designs and engineering skills could really make a difference."

Now in its twelfth year, the Design Challenge has been delivered in South Africa, Cameroon, the UK, Ireland and the USA, to more than 70,000 students.



*The winning team from Greenwich University*

# ENERGY RESEARCH FUNDING

**UNIVERSITY OF BRISTOL-LED ENERGY RESEARCH CENTRE BOLSTERED BY £5 MILLION GOVERNMENT FUNDING**

**THE SUPERGEN Energy Networks (SEN) Hub, set up to help facilitate transition to a fully sustainable energy sector, has received substantial financial backing from UK Research and Innovation (UKRI).**

**While electricity, gas and heat networks are vitally important enablers of net zero, planning, design and the operation of energy networks need to be revisited and optimised to maximise their impact.**



© blackday - stock.adobe.com

**SEN research will be strongly aligned with the Government's Net Zero Research and Innovation Framework and feed directly into the Net Zero Delivery plan through its membership of the Net Zero Innovation Board.**

**Professor Philip Taylor, Pro Vice-Chancellor for Research and Enterprise at the University of Bristol, and Head of the SEN Hub, said, "The global energy sector is facing considerable pressure arising from climate change, depletion of fossil fuels and geopolitical issues around the location of remaining fossil fuel reserves. Energy networks exist primarily to exploit and facilitate temporal and spatial diversity in energy production and use and to exploit economies of scale where they exist.**

**"The modernisation of energy networks' technology, processes and governance is a necessity for the energy sector to be fit for the future. Good progress has been made in de-carbonisation in some areas but this has not been fast enough, widespread enough across vectors or sectors and not enough of the innovation is being deployed at scale.**

**"This project aims to accelerate the development, scale up the deployment and increase the impact delivered."**

AUTHOR DETAILS
**Mark Patrick**
is a Technical Writer with Mouser Electronics

1 The electromagnetic spectrum ranges from long wave radio waves to x-rays and gamma rays and beyond.
*(Source: Mouser Electronics).*

2 The radio frequency spectrum from very low frequencies (VLF) through to extremely high frequencies (EHF).
*(Source: Mouser Electronics)*

3 The functional block diagram of a single-stage superhet AM broadcast receiver.
*(Source: Mouser Electronics)*

# GETTING TO GRIPS WITH RF DESIGN

An introductory guide to RF design and terminology. By MARK PATRICK

**Wireless communication has become ubiquitous and forms a vital aspect of virtually every technology we interact with. Radio frequency (RF) and wireless design are considered specialist skills within the electronics industry, so usually only those involved understand the terminology and critical principles. However, embedded designers and hardware engineers now find their development tasks require them to have a basic understanding of RF concepts.**

Today, we take always-on connectivity for granted. Wireless communication underpins all our technology, from Bluetooth headsets to automotive infotainment systems, with ultra-low-power innovations in wireless transceiver design opening up even more potential use cases.

To fully understand how wireless communication works, designers and engineers need to consider several fundamental concepts. The first is that wireless communication relies on electromagnetic waves, which are synchronised oscillations of electric and magnetic fields propagating through space. The spectrum of electromagnetic radiation is extremely wide i.e. long-wave radio, microwaves, visible light, and ultraviolet light. The term wavelength, measured in metres, describes the distance between the crests or two corresponding points of an electromagnetic wave, ranging from tens of kilometres (e.g. long wave radio) to tens of nanometres (e.g. infrared). To put it into context, visible light detectable by the human eye ranges from 380 to 700 nanometres.

The frequency of electromagnetic waves is measured in cycles per second and called Hertz (Hz). The wavelength is the reciprocal of the frequency.

Usable radio frequencies occupy a significant part of the electromagnetic spectrum from 30kHz (long wave broadcast stations) to 300GHz (millimetre wavelength bands used for telecommunications and space remote sensing applications).

Radio waves radiate or propagate from a source and are impacted by reflections, scattering, and absorption. The nature of propagation varies with frequency and understanding how the waves propagate and their paths allow engineers to determine the maximum distance and reliability of communication between two points. Radio waves travelling directly between two points are called ground, direct, or surface waves; over relatively short distances, with no obstacles in between, propagation for these waves is line-of-sight. Radio waves also radiate into the ionosphere, extending the potential distance between a transmitter and a receiver.

The ionosphere comprises different layers: D, E, and F. The layers' ability to reflect radio waves depends on the sun's ionisation of the layers, which continually changes with the time of day and season. Short-wave radio waves utilise this form of propagation to cover long distances, but communication can be subject to considerable fading and multiple path reflections..

A radio signal consists of a sinusoidal wave of a set frequency called a carrier. The carrier needs modulating to convey any sound or digital data information. There are many different types of modulation in regular use. Amplitude modulation (AM) and frequency modulation (FM) are popular methods used for commercial broadcasting and have been used since the early 1900s.

1

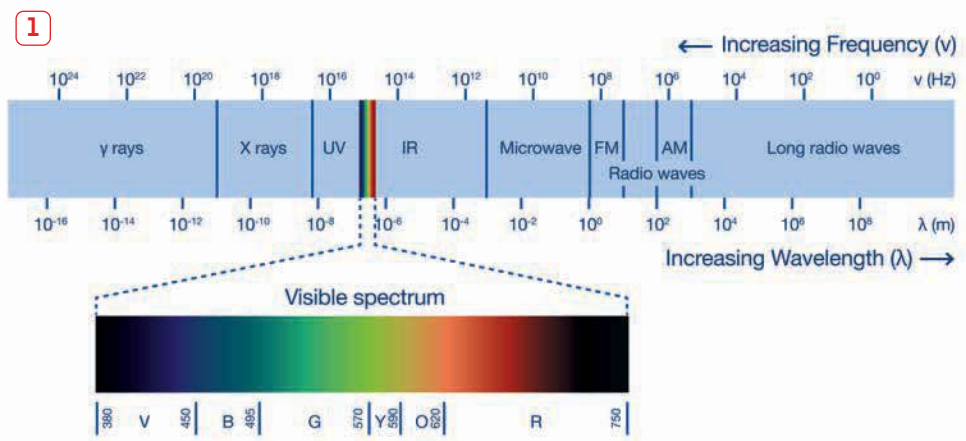

4 The VSWR characteristics against the frequency of the Linx Technologies ANT-LPC-FPC-50 half-wave dipole antenna. *(Source: Mouser Electronics)*

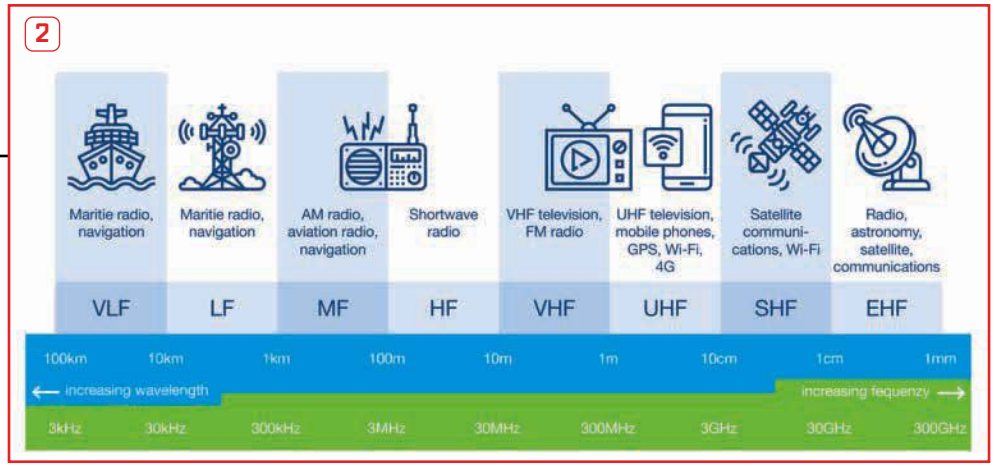


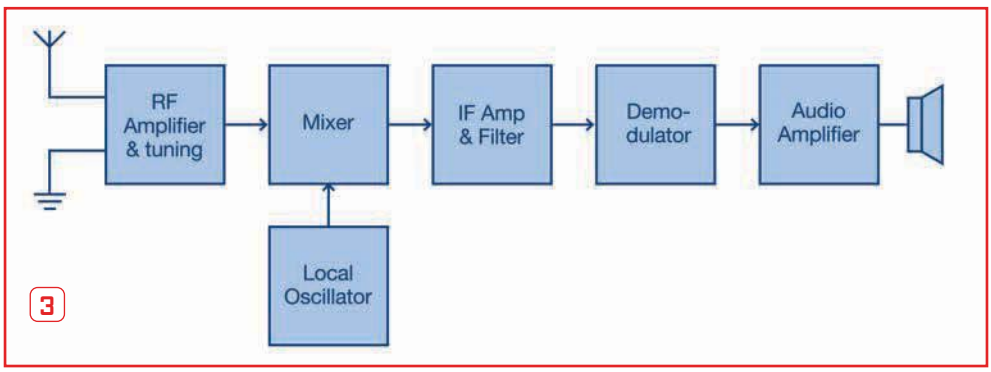


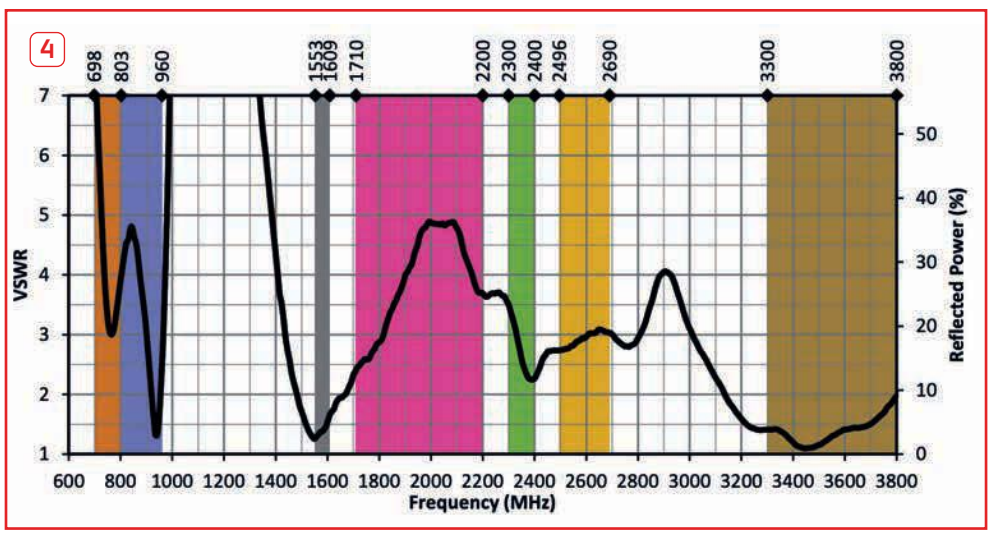


As one might suspect, amplitude modulation changes the amplitude of the carrier signal, whereas frequency modulation maintains a constant amplitude but varies the frequency accordingly to the input sound. The modulation input is an audio frequency of constant amplitude. The AM trace highlights how the amplitude of the transmitted signal varies according to the source signal. For FM, the carrier frequency varies instead. Demodulation techniques are employed to extract the original signal from the modulated carrier.

More complex modulation methods used for high-speed data communication include: Binary phase shift keying (BPSK); Orthogonal frequency division multiplex (OFDM) and Quadrature amplitude modulation (QAM)

## BASIC RECEIVER CONCEPTS

Figure 3 illustrates the basic functional block diagram of a single-IF stage superheterodyne (superhet) receiver typically used to receive medium-wave and short-wave AM broadcast signals. A mixer and local oscillator (LO) bring the desired RF signal down to an intermediate frequency (IF). By varying the LO, the IF frequency is always the same, simplifying the design of the IF amplifier and filter stages. Traditionally, double mixer/IF stages were used, with IF frequencies of 10.7MHz and 455kHz in many short-wave receivers.

However, a direct conversion or zero IF approach (the LO is set to the desired reception frequency) has now gained popularity, yielding the baseband signal directly out of the mixer ready for demodulation.

A receiver's demodulation and signal processing stages increasingly use software-based digital processing techniques. Software-defined radio (SDR) has become the norm for many complex wireless applications such as cellular base stations, small cells, and secure wireless communications systems.

When dealing with any RF signal, the decibel milliwatt (dBm) is a popular measure of relative signal strength or power output. A dBm is a measure relative to 1mW. As in any decibel measurement, it can also indicate the gain or loss of an amplifier or filter stage. For a receiver, a dBm measurement is typically given as the receiver's sensitivity, the minimum signal strength it can receive. For example, a Wi-Fi module might require a -70dBm signal to operate reliably. Satellite navigation receivers are even more sensitive, typically working with signal strengths as low as -150dBm.

The dBm is also used to indicate the gain of an antenna, which is an essential aspect of determining the overall link budget of a wireless communications installation.

Antennas come in all shapes and sizes. In general, the length of an antenna is proportional to the wavelength used and typically either a half-wave or quarter-wave dipole. For very low frequencies, the distances are

> “EMBEDDED DESIGNERS AND HARDWARE ENGINEERS INCREASINGLY FIND THEIR DEVELOPMENT TASKS REQUIRE THEM TO HAVE A BASIC UNDERSTANDING OF RF CONCEPTS.”

5 Calculating the link budget is a vital step in determining the reliability of a wireless link between two points
*(Source: Mouser Electronics)*

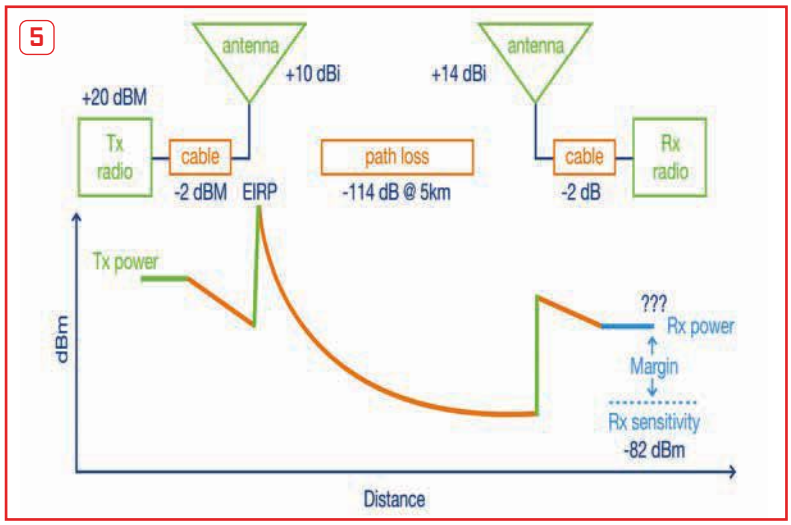


several kilometres. At the opposite end of the scale, for ultra-high-frequency applications such as Wi-Fi operating at 2.4GHz, a half-wave antenna is just 30mm. To make them even more compact, antenna engineers have some creative shapes that essentially fold up the antenna, making it suitable for PCB fabrication or on a flexible circuit.

An antenna impedance must match the impedance of the transmitter's power amplifier output to achieve optimal energy transfer. An impedance of 50 ohms is the universally accepted value for antennas, coaxial cables, and transmitter output stages. If the impedance is mismatched, energy is reflected to the transmitter's power amplifier (PA), which can cause damage if too high. The voltage standing wave ratio (VSWR) indicates how much power is reflected to the transmitter rather than being radiated. Figure 4 illustrates the VSWR characteristics of the Linx Technologies ANT-LPF-FPC-50 flexible antenna. A VSWR ratio of 1:1 indicates zero reflected power. In practice, a VSWR of 1:3 works for most applications.

Another way of considering the impedance mismatch of an antenna is by way of a return loss measured in dB. A lower return loss indicates less power loss due to impedance mismatch.

Two other essential antenna attributes are gain and radiation pattern. The gain is referenced to a theoretical lossless isotropic antenna (radiates uniformly in all directions like a sphere) and expressed in dBi. Some antennas radiate more power in specific directions (i.e., polarisation), so understanding its radiation pattern will assist engineers in deciding the best mounting location for various use cases. Radiation patterns are normally provided for an antenna as polar charts for each plane.

To determine if a wireless link over a specific distance is feasible, you need to calculate the link budget. One key factor in calculating the link budget is the free path loss. As a signal is radiated, the geometric spread of the wavefront reduces the power density. The free space path loss calculation determines how much power is received at a distant point. The formula assumes a line-of-sight distance between the transmitter and receiver:

$$L_{FS}(\text{dB}) = 20\log_{10}\left(4\pi\frac{\text{distance}}{\text{wavelength}}\right)$$

Barriers such as ground features, buildings, and trees increase path loss. Many antenna and wireless manufacturers provide free space path loss calculators on their websites.

Figure 5 illustrates all the factors between a transmitter and a receiver. In the example, the transmitter (Tx) has an output power of +20dBm and is connected to an antenna with a gain of +10dBi. Provision is made for losses in the coaxial cable of -2dBm. On the receiving (Rx) side, a higher-gain antenna yields a gain of +14dBi with cable losses of -2dBm included. The receiver's sensitivity, taken from a datasheet, is quoted as -82dBm. In this example, the path loss over 5km has already been calculated as -114dBm. Will the received signal be sufficient to guarantee a connection? If you add all the highlighted figures (i.e., the link budget), the expected signal is -74dBm, resulting in an 8dBm margin in receiver sensitivity.

Any radio-frequency-based device may also be subject to three different types of regulatory compliance:

**Wireless protocol certification** – Wireless protocols such as Bluetooth and Wi-Fi may require certification. Modules and wireless transceiver systems-on-chips (SoCs) are certified by the relevant organisations (for example, the Wi-FI Alliance).

**Frequency spectrum licencing** - As previously mentioned, some wireless communication methods operate within a nationally licensed spectrum (e.g., cellular). Others, such as Bluetooth, do not require a licence to use.

**Radio type approvals** - In some cases, the national or regional radio regulatory body must approve any wireless module or circuit. The approval process ensures that it causes no unwanted electromagnetic interference to other users and meets all specifications of output power and co-channel interference.

## GETTING TO GRIPS WITH TERMINOLOGY

In this article we've looked at some basic concepts and terminology surrounding radio frequency and wireless design. While each topic deserves a more in-depth explanation, this should serve as a good starting point for further exploration about this fascinating subject.

Although short-wave RF design is little used today, the context helps explain some of the principles covered. Today's wireless engineers typically focus on projects over 100MHz, with relatively short distances. That said, deep space and satellite communication operate over exceptional distances. Some involve high transmitter power and highly directional ultra-high-gain antennas, which are necessary for significant path losses. NE

# MA Data Services

A division of MA Business

## Reach the right people with our UK Manufacturing & Engineering data services

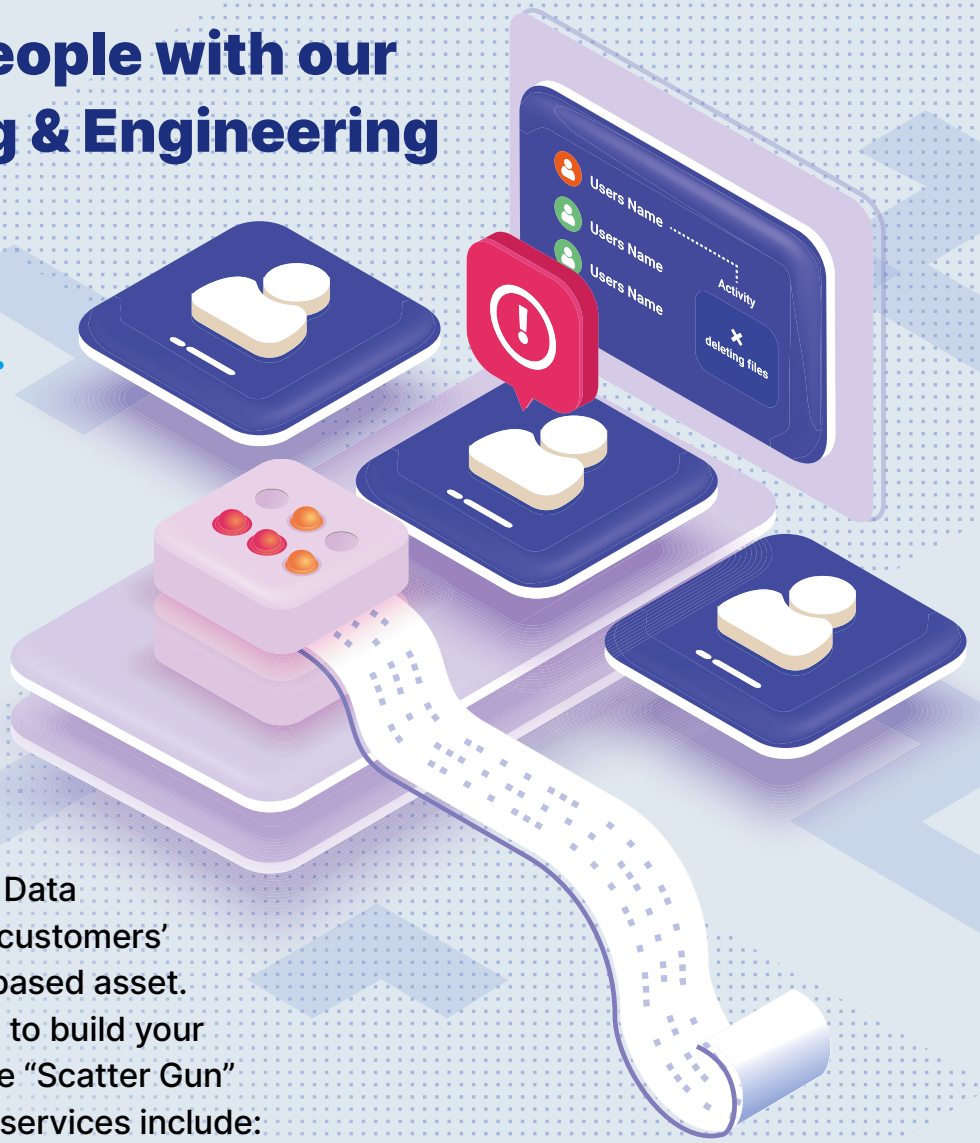


### If you're talking to the manufacturing industry. Talk to us.

Everything we do in our business or personal life is driven by data. Mark Allen data provides OE Manufacturing, Engineering and Design data that connects specialist audiences with critical information.

As data management experts with over 40 years' pedigree, MA Data helps companies transform their customers' data into a strategic knowledge-based asset. Our vast database can be filtered to build your bespoke target audience, no more "Scatter Gun" approach to marketing. The data services include:

- ✓ Data Agreement
- ✓ Reconciliation
- ✓ Data Rental
- ✓ Business Review Service
- ✓ Research projects
- ✓ Survey projects
- ✓ Demographic Analysis
- ✓ Telemarketing

## Build the data you need to succeed

Please contact Donna Shepherd to find out more on 07522 946097 or donna.shepherd@markallengroup.com

**www.madataservices.com**

GDPR COMPLIANT

# PRODUCT ADVERTORIALS

FOR ALL ENQUIRIES CALL: **PETER RING** OR **JAMES CREBER** ON: 01322 221144

## ATC SEMITEC

**Ultra-thin, Flexible Thermistor for fast surface temperature sensing especially in tight spots**



- Truly versatile the Semitec JT ultra-thin NTC Thermistor, available from ATC Semitec, is widely used in diverse industries from medical technologies, prismatic and pouch cells, to E-V applications.
- Slim but strong, the JT is only 0.5mm thick at its sensing tip making it the thinnest flexible NTC world-wide.
- Suitable for both air and surface temperature monitoring, the sensor is laminated between two polymer layers making it both flexible and resilient. The JT can literally bend over backwards!
- By placing closer to the heat source in space-sensitive applications, the JT helps to deliver optimum temperature control.
- **www.atcsemitec.co.uk / 01606 871680**

## DANISENSE

**Danisense starts work on expansion of Taastrup headquarters**

- Key Points: Extension adds 800 square meters of space, new production facility, 15x increase of storage space in new high storage and 20+ new desks / workstations plus two new meeting rooms.
- Danisense, the leader in high-accuracy current sense transducers for demanding applications, has recently broken ground and started work on the extension of their headquarters in Taastrup, Denmark.
- Remarks Loic Moreau, Sales & Marketing Director at Danisense: "Thanks to our significant growth over the last couple of years, we have simply run out of space at our current headquarters. The time has now come to extend our premises to gain more space for our production and storage facility as well as for our offices."
- With the extension of its headquarters, Danisense will add 800 square meters to include a new production facility, and a new high storage increasing the existing storage space by 15 times. In addition there will also be space for 20+ new desks / workstations plus two new meeting rooms.



- "By adding this significant amount of new space at our headquarters we want be ready for the future growth of Danisense." Moreau adds.
- **lmo@danisense.com / www.danisense.com**

## MANHATTAN SKYLINE

**EDT Smart Embedded Modules - Your Plug and Play Smart Touch Display Solution**

- Smart Embedded Modules enable the user to add High End Graphics to any product in a very short time. The modules are highly integrated providing all necessary components to control the Display, the Touchscreen as well as the many Interfaces, with low power consumption and instant Start Up time.
- 7-36Volt Input range.
- RS232, RS485, CAN, USB OTG, I2C, SPI, GPIO.
- SDRAM Framebuffer memory, Flash memory for Graphics.
- TouchGFX Graphic Framework for High End Graphics on embedded system.
- Customizable to fit your exact needs.
- Application Board with relays, Push Buttons, LEDs and Sensors.
- Add on module with Bluetooth and SD-Card.
- Smart Modules are available in sizes of 4.3inch, 5 inch , 7 inch and 10.1inch.



- **www.mansky.co.uk / 01344 307733**

## MIKROE

**MIKROE's IrDA 4 Click provides a cost-effective solution for sending and receiving IR serial data**

- Latest wireless connectivity Click features Vishay IR Tx and Microchip IR encoder/decoder.
- MikroElektronika (MIKROE), the embedded solutions company that dramatically cuts development time by providing innovative hardware and software products based on proven standards, has expanded its range of wireless connectivity Click™ boards with the IrDA 4 Click, a compact add-on board that provides a cost-effective solution for sending and receiving IR serial data. This board features the TFBS4650, an infrared transceiver from Vishay Semiconductors, which includes a PIN photodiode, an infrared emitter, and a low-power integral circuit and complies with the IrDA physical layer specification. IrDA 4 Click also includes an infrared encoder/decoder, the MCP2120 from Microchip, that sends and receives IR serial data between the infrared transceiver module and the host MCU.
- Click boards follow a modular prototyping add-on board standard invented by MIKROE, which revolutionizes the way users add new functionalities to development boards.




- **teodora.djuric@mikroe.com / www.mikroe.com**

## NEO.CORTEC

**Wireless mesh networking leader, NeoCortec expands into new facilities**

- Manufacturer of ultra-low-power bi-directional wireless mesh network modules doubles size of HQ.



- NeoCortec, manufacturer of ultra-low-power bi-directional wireless mesh network modules, has moved into a new headquarters just outside of Copenhagen, Denmark, effectively doubling the office and laboratory space available.
- Comments CEO Thomas Steen Halkier: "We took advantage of a nearby facility which has just become available in order to give us space to grow and develop our capabilities. Our focus is on enabling smart buildings by providing a sensor networking platform technology that delivers the information that owners and users of public and commercial spaces need to make informed choices and implement energy-saving, secure premises management systems."
- According to Fortune Business Insights, the European smart building market is projected to grow from $3.59 billion in 2021 to $11.20 billion in 2028 at a CAGR of 17.6% during the forecast period. More and more, sensors are being used to provide information to control environmental, occupancy and security functions.
- **csf@neocortec.com / www.neocortec.com**

## NICOMATIC

**Nicomatic opens new testing laboratory, offering materials test services for customer products**



- New fully staffed, highly-specified materials test lab now offers a range of test & qualification services to customers with demanding applications.
- As part of its design and development process for rugged, harsh environment and high reliability (hi-rel) applications, leading manufacturer of high-performance interconnect systems, Nicomatic subjects its products to stringent environmental, mechanical and electrical tests – ensuring they meet complex industry standards and specifications. Now, the company has opened a materials testing laboratory offering these test and qualification services to customers with demanding applications.
- Dedicated Nicomatic test engineers work closely with customer design and development teams, applying their expertise to complex materials test and qualification of customer projects. Nicomatic's test lab is quality management system certified to ISO 9001 & AS9100, with decades of experience in meeting industry standards and specifications across defence, aeronautics and space applications, including MIL-DTL-55302, MIL-DTL-83513 and ESCC3401.
- **p.mcdavitt@nicomatic.com / www.nicomatic.com**

# PRODUCT ADVERTORIALS

FOR ALL ENQUIRIES CALL: **PETER RING** OR **JAMES CREBER** ON: 01322 221144

## OKW

**OKW's New CONTROL-KNOBS With Optional LED Illumination**



- OKW has launched advanced new rotary/click CONTROL-KNOBS for menu-driven electronics. These elegant and ergonomic tuning knobs fit rotary potentiometers or encoders with round shaft ends (DIN 41591).
- Applications include measuring and control; medical, wellness and laboratory technology; HVAC; communications; Smart Factory and building control systems.
- Soft-touch CONTROL-KNOBS are easy to grip and comfortable to operate. They can be illuminated if required, using SMD LED technology (5 V). RGB LEDs allow individual lighting and colours, illuminating a translucent optic ring on the top and the optional pointer line.
- Innovative CONTROL-KNOBS comprise two parts – a robust polycarbonate inner body and a soft-touch grooved TPE outer shell. There are two sizes: ø 36 mm and ø 46 mm. The collet fixing is suitable for 6 mm and 1/4" spindles. The standard colours are nero black and volcano grey.

- **www.okw.co.uk / sales@okw.co.uk / +44 1489 583858**

## THE OPTOELECTRONIC MANUFACTURING CORPORATION

**New from OMC - visible wavelength LEDs in fibre optic housings for polymer and glass optical fibre cover the whole visible light spectrum**



- OMC, the pioneer in optoelectronics design & manufacture, has developed LEDs for coupling visible wavelengths across the entire visible light spectrum into either 1mm core size polymer optical fibre or 200 micron or larger glass optical fibre. OMC's renowned pioneering expertise in designing and manufacturing fibre optic components for over thirty years has positioned the company as a world-leading expert in fibre optic technology and this latest product is suitable for uses as wide-ranging as laboratory equipment for research purposes, test and measurement instrumentation, and datacommunications in industrial, medical and multiple other applications.
- Originally OMC's visible wavelength LEDs in fibre optic housings were developed as a custom product for a research application which required wavelength-specific light sources to cover the whole visible light spectrum and illuminate laboratory samples.

- **omc-sales@omc-uk.com / www.omc-uk.com**

## PANASONIC INDUSTRY

**Panasonic Industry InfoHub – useful links and downloads for automation devices and solutions**



- With the all-new InfoHub, Panasonic Industry launched a free online portal that contains programming libraries, documentation, and downloads.
- Customers of Panasonic Industry's industrial motors, HM-series HMIs, Panasonic PLCs, or the Industry 4.0 communicator FP-I4C can now find a comprehensive and state-of-the-art data portal: the Panasonic Industry InfoHub.
- The InfoHub not only comprises software files and programming libraries for motion control and network protocols but also user manuals, the latest software versions, and example projects, as well as short instructions and entire help systems.
- With this wide-ranging database that is openly accessible, manufacturers, machine builders, and engineers in the factory automation market benefit from the clearly structured and extensive online service.

- **moritz.cehak@eu.panasonic.com / http://industry.panasonic.eu**

## PICKERING ELECTRONICS

**Miniature high voltage reed relay from Pickering now rated up to 150°C**



- Series 104HT suits a wide range of applications including EVs, solar, HV instrumentation IC testers and more.
- Pickering Electronics, a renowned company for its remarkable advancements in reed relay miniaturization and superior performance over the past 50 years, today launched a new high temperature high voltage single-in-line reed relay that can operate at up to 125°C. The new Series 104HT relay belongs to a family of miniature high voltage reed relays and is available in the SIL package on a 6.35mm (0.25in) pitch, with a stand-off voltage capability of up to 4kV.
- "High temperature can significantly affect the performance of reed relays, and many devices are only able to operate at up to 85°C. By designing these devices with increased magnetic drive and using specialist potting materials to sustain insulation resistance, Pickering can now offer reed relays that perform at elevated temperatures, and which can be stored at up to 150°C." Said Kevin Mallett, Technical Specialist at Pickering Electronics.

- **poppy.moore@pickeringrelay.com / www.pickeringrelay.com**

## PICKERING INTERFACES

**New MEMS-based RF multiplexers from Pickering Interfaces deliver 300x operational life and 60x test system throughput**



- Partnership with Menlo Microsystems introduces new switching technology to range of PXI RF MUXs for substantially improved performance.
- Pickering Interfaces, the leading supplier of modular signal switching & simulation solutions for use in electronic test & verification, announced today at IMS a new range of PXI/PXIe RF (radio frequency) multiplexer (MUX) modules featuring a new switching technology. Ideal for wireless communications and semiconductor test, the new MEMS-based RF multiplexers deliver vastly increased operational life (up to 300x), faster operating speed (up to 60x), higher bandwidth, and increased RF power handling versus traditional EMR (electromechanical relay) alternatives. Insertion loss also remains comparable with EMRs and much lower than solid-state switches.
- The family is based on the Ideal Switch from Menlo Microsystems, which are the first commercial MEMS components with the performance characteristics to support demanding RF test environments such as semiconductor, consumer wireless devices, and various S-band applications (including mobile services, satellite communications, and radar).

- **kim.otte@pickeringtest.com / www.pickeringtest.com**

## POWELL

**Blindmate RF contacts from Phoenix Company of Chicago featuring the widest available axial mating tolerance now available from East Coast Microwave, a subsidiary of Powell Electronics**

- Now available through East Coast Microwave, a subsidiary of Powell Electronics, the supplier of connectors and more for high-rel applications including defence, aerospace and industrial, are PkZ series blindmate RF contacts from Phoenix Company of Chicago. With a constant impedance up to a .090" axial mating tolerance, the components feature the widest axial mating tolerance of blindmate RF contacts currently available on the market. This enables the contacts to accommodate large radial and axial misalignment tolerances found in modular applications, e.g. in aerospace and vehicle communication systems, test systems, radar systems, UAV systems etc.



- The unique design of the high performance and reliable PkZ series contacts benefits from very low mating forces and provides constant impedance even as differences in mating profiles or gaps are created in the mating interface. This eliminates elaborate methods such as an internal spring to overcome mating gaps.

- **gevans@powell.com / www.powell-electronics.eu / www.powell.com**

DID YOU KNOW?

**£42bn** The value of the UK events industry last year

# OUT & ABOUT...




LONDON

## 01 DSEI 12-09-2023

Join the international defence community at DSEI 2023, featuring over 2,800 defence and security suppliers – including major prime manufacturers plus more than 230 new exhibitors. DSEI is the premier hybrid event of its kind and is crucial in bringing governments, the armed forces and the wider industry together.

http://www.dsei.co.uk

FARNBOROUGH

## 02 EI Live 13-09-2023

This trade show focuses on smart building and home automation industries and offers ample opportunities for businesses. It is the premier event for residential AV and home automation, attracting quality customers who are decision-makers with purchasing power. The exhibition showcases a range of exhibitors and promotes emerging technologies and innovations.

http://www.10times.com/ei-live

AMSTERDAM

## 03 IBC 2023 15-09-2023

Delivering innovation and empowering people, IBC 2023 is where the future of the global media and entertainment industry is defined and actioned. Energising the market, enabling content everywhere and inspiring new conversations, IBC brings the creative, technology and business communities together to collaborate, learn and unlock new opportunities.

http://www.show.ibc.org

BRUSSELS

## 04 AutoSens 2023 19-09-2023

AutoSens continues to shape the ADAS and autonomous agenda with over 60 speakers across expert panels, technical case studies, and sessions covering 12 key themes. Visitors will experience an exhibition full of demos from technology companies at the forefront of sensors and computer vision to explore.

http://wwwauto-sens.com/

AMSTERDAM

## 05 Digital Transformation Week Europe 2023 26-09-2023

Book your conference ticket to Digital Transformation Week Europe which is set to explore what's new and worth attention in the #DigitalTransformation Ecosystem.

www.digitaltransformation-week.com/europe/

LONDON

## 06 The 2nd Annual London Climate Technology Show 2023 26-09-2023

The London Climate Technology Show brings together professionals from key industry sectors working together towards a decarbonised future. An ideal networking platform it showcases disruptive solutions to mitigate the climate crisis, as well as green tech innovations and effective decarbonisation strategies accelerating the transition to a low-carbon economy.

https://climatetechshow.com/

ASCOT

## 07 UK Hi-Fi Show Live 2023 29-09-2023

The UK Hi Fi Show Live is the UK's longest-running premier high-end audio show, offering a great range of beautifully-appointed spaces and event opportunities to showcase the world's finest hi-fi.

http://www.10times.com/hifishowlive

COVENTRY

## 08 Engineering Design Show 12-10-2023

The Engineering Design Show (EDS) returns to The Coventry Building Society Arena on the 11th - 12th of October 2023. EDS has been showcasing the very best of engineering, electronics and embedded design for over a decade.

http://wwwengineeringdesignshow.co.uk

# Mark Allen

## *Inspired* by innovation

When it comes to engineering, manufacturing and innovation, the **Mark Allen Group** has an unrivalled reach in terms of audiences, markets and brands.

Whether it be in market-leading brands like *The Engineer*, *Eureka!* or *New Electronics*; in shows like *Subcon* and *The Engineering Design Show*; or in conferences like *Additive International* or the *European Manufacturing Strategies Summit*; the **Mark Allen Group's** portfolio of engineering platforms has something to offer everyone involved in the sector.

We want to make sure that you are aware of not just some, but all of what we have to offer you and that you are able to take advantage of all the business opportunities that come with working with the **Mark Allen Group**.

With that in mind, visit our website **www.markallengroup.com** to find out more about our products or talk to one of our sales agents about any of the titles you may be interested in.

Because if you're talking engineering, you're talking our language.

THE ENGINEER · Eureka! · MANUFACTURING MANAGEMENT · MACHINERY · newelectronics

FAST Fastening & Assembly Solutions and Technology · ENGINEERING DESIGN SHOW · SUBCON · ENGINEERING SOLUTIONS LIVE · MA Data Services

MANUFACTURING AND DESIGN ENGINEERING MADE IN IRELAND · THE ENGINEER Collaborate to Innovate · MANUFACTURING MANAGEMENT SHOW · THE ENGINEER EXPO · Additive INTERNATIONAL

OFFICIAL IRTE JOURNAL TRANSPORT ENGINEER · Operations engineer · ENGINEERING DESIGN SHOW >RECONNECT · electric & hybrid vehicle technology international · iVT INTERNATIONAL INDUSTRIAL VEHICLE TECHNOLOGY

EMS Summit · VEHICLE DYNAMICS INTERNATIONAL · reinforced plastics · Aerospace TESTING INTERNATIONAL · WORLD PUMPS

## *Passionate* about engineering

# ENGINEERING DESIGN SHOW

Established 2012



## 11-12 October 2023

**Coventry Building Society Arena**

## THE UK'S BIGGEST EVENT DEDICATED ENTIRELY TO ENGINEERING, ELECTRONICS AND EMBEDDED DESIGN

Join thousands of design engineers this October! Source the latest products, services and innovations available to the sector. Register your interest today.

**HEADLINE SPONSORS**

WÜRTH ELEKTRONIK MORE THAN YOU EXPECT

SOLID STATE SUPPLIES

www.engineeringdesignshow.co.uk

@EngDesignShow #EngDesignShow

Interested in exhibiting? Get in touch with simon.bonell@markallengroup.com