Objectives

Therefore, having completed this course, students should be able to:

- analyze the rationale behind recognition and protection of the family;
- identify sources of family relationship and explain the effects of such relationships as incorporated under Ethiopian family laws;
- define marriage and discuss the essence of the institution of marriage;
- state the essential conditions for the validity of all forms of marriage;
- explain irregular union and analyze its distinguishing further as compared to marriage;
- identify and analyze the departure made by the new family laws of Ethiopia from the 1960s Civil Code particularly with regard to the rights of women and protection of children.
- discuss the rules pertaining to ascertainment of maternal and paternal filiations;
- identify and analyze mechanisms designed by the family laws to resolve disputes arising in marriage and irregular union;
- define adoption and discuss the essential conditions for establishments of adoption, its effects and causes of revocation of adoption;
- define the obligation to supply maintenance and analyze the rationale behind such obligation.

Chapter One: General Consideration

Introduction

Family is the basic unit of a society. Family has social as well as economic importance in any society. Naturally, persons bound by consanguinity and affinity are united to form the community.

Family Law is the branch of law which sets the rules to govern the ongoing responsibilities of family members to each other; both at the time families are formed and after relationships dissolve.

Objectives

After going through this chapter, students will be able to:

- Discuss the meaning and sources of family law
- Analyze the rationale behind protection and regulation of family
- Understand the different sources of family relationship
- Discuss the effects of family relationship.

1.1 Definition and Sources of Family Law

There is no generally accepted definition of family law. 'Family law is usually seen as the law governing the relationship between children and parents, and between adults in close emotional relationships'

1.2 Rationale Behind Protection and Regulation of the Family

Planiol defines a family as a group of persons who are united by marriage, by filiations or even, but exceptionally, by adoption.

Another more or less similar definition is given by Murdok. In that definition, family is considered as ' a social group characterized by common residence, economic cooperation, and reproduction. It includes adults of both sexes, at least two of whom maintain a socially approved sexual relationship, and one and more children, own or adopted, of the sexually cohabiting adults.'

From the definitions given above, one can categorize the family in to nuclear and extended family. The first and basic type of family organization is the nuclear family.

The nuclear family basically consists of a married man and woman with their offspring. 'The nuclear family is a universal human social grouping. Either as the sole prevailing form of the family or as the basic unit from which more complex familial forms are compounded, it existed as a distinct and strongly functional group in every known society.'

An extended family, on the other hand, consists of two or more nuclear families affiliated through an extension of the parent-child relationship rather than of the husband-wife relationship, i.e, by joining the nuclear family of a married adult to that of his parents.

The family is a very important constitutive part of a society. It has natural, economic as well as social importance.

The family is the nucleus of the society, and hence much depends on the safety and security of the family.

The state is interested in the well ordered regulation of the family organization of the persons within its borders.'

The state uses different means to regulate and control the formation as well as the effects of forming a family. One basic means of doing so is through legislations.

The state protects and regulates the family by using its legislative power.

1.3 Sources of Family Relationships

There are three sources of family relationships, marriage, filiation and adoption.

1.3.1 Relationship by consanguinity

Relationship by consanguinity results from the birth. It is 'the tie which exists between two persons, such as the son and father, the grandson and the grandfather; or those who descend from a common ancestor, such as two brothers, or two cousins.'

Hence, relationship by consanguinity is a natural fact which is derived from birth.

The following diagrams illustrate how the computation is to be undertaken:

To reach to the degree of relationship between persons related in the direct line, we simply count the number of lines between them. Here, the grandfather and the grandchild are related in the third degree in the direct line.

Grandfather

⇩

Father

⇩

Child

⇩

Grandchild

In calculating the degree of relationship in the collateral line, there are two way, which will lead to different results. Let us have a look at the following diagram to have a clear understanding of the two systems

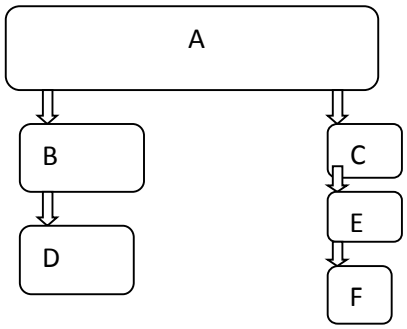

The children of A are related in the collateral line. If we are using the Civil law system to calculate the degree of relationship between B and C, who are brothers, we will add the two lines which are departing from the common ancestor A. Hence, B and C are related in the second degree. B, who is the uncle of E, is related to E in the third degree. And B is related to F in the fourth degree.

1.3.2 Relationship by Affinity

Relationship by affinity is created as a result of marriage. 'Relatives through marriage are persons who are not relatives, but which come to join the family by means of a marriage.'

A relationship does not exist between the relatives of one spouse with the relatives of the other spouse.

1.3.3 Relationship by Adoption

Relationship by adoption is created as a result of a special contract between the adopter and the original families of the adopted child. Unlike blood relationship, it is a fictitious relationship which resulted from the agreement of the parties to the adoption contract.

1.4 Effect of Family Relationship

We can talk about three effects of a relationship: creation of rights, creation of obligations and making the related persons incapable of performing some juridical acts.

Rights emanating from a relationship:- relationship results in the right of the relatives to take the estate of the deceased relative. That is to say, a right of succession is one of the effects of a family relationship. Secondly, there is also the right of destitute relatives to get maintenance from the other relatives. Parents will also have a right over the person and the estate of their children. /Art. 198 of RFC/.

Obligations emanating from relationship: there are also various obligations which will subsist among the relatives. The first obligation is that of alimony. Relatives have the obligation to provide alimony for the destitute relatives who cannot have their own means of income. Moreover, there is also the duty on the parents to take custody and raise their children. /Art. 219 of RFC/.
Taking custody of children also involves making decisions in respect of the health, education as well as social contacts of the child. Articles 255 and the following articles of the RFC provide by way of obligation on the parents to take care of the health, residence, education as well as social contact of the minor child.

1.6 Summary

Family is defined as a social group characterized by common residence, economic cooperation, and reproduction. The family includes adults of both sexes, at least two of whom maintain a socially approved sexual relationship, and one and more children, own or adopted, of the sexually cohabiting adults. Family is the basic unit of any society. It has social as well as economic importance. The need to have a law governing this basic unit of the society is somehow tied with the development of family through time.
Considering this need, societies have developed one branch of law solely dealing with issues related to the family: Family Law. Family law is the branch of law which governs the relationship between children and parents, and between adults in close emotional relationships.
Family relationship emanates from either the blood relationship which exists between the persons concerned, which is called relationship by consanguinity or from marriage relationships, what is called affinity. There is also another source of family relationship: Adoption. It is through one of these three means that a family is established in any society. The existence of this relationship, on the other hand, comes

with its own consequences, entailing both right and obligation.

Chapter Two: Marriage

Objectives

After completing this chapter students will be able to

- Define marriage
- Understand the difference between betrothal and marriage
- Identify the different modes of conclusion of marriage
- Analyze the essential conditions for the conclusion of marriage as incorporated under the Family law
- Identify the purpose of opposing conclusion of marriage and the persons entitled under the law to make such oppositions
- Identify and discuss the effect of violation of the essential conditions of marriage

2.1 Betrothal

Mainly the betrothal was concluded between the parents of the future spouses. Betrothal is defined under article 560 of the civil code as a contract between the members of two families that a marriage shall take place between two persons, the fiancé and the fiancée, belonging to these two families.

2.2 Definition of Marriage

Marriage could be regarded as either a status or a contract. In law a status is regarded as a relationship which has a set of legal consequences which flow automatically from that relationship, regardless of the intention of the parties. A status has been defined as 'the condition of belonging to a class in society to which the law ascribes peculiar rights and duties, capacities and incapacities.' So the status view of marriage would suggest that, if couples marry, then they are subject to the law governing marriage, regardless of their intentions.

The alternative approach would be to regard contract as governing marriage. The legal consequences of marriage would then flow from the intentions of the parties as set out in an agreement rather than any given rules set down by the law.

2.3 Modes of Conclusion of Marriage

The Revised Federal Family Code as well as the Regional Family Codes recognized three modes of conclusion of marriage. These are: Civil Marriage, Religious Marriage and Customary Marriage.

2.3.1 Civil Marriage (Marriage Concluded before an Officer of Civil Status)

For a marriage to be considered as being concluded before an officer of civil status, a man and a woman need to appear before the officer for the purpose of concluding

marriage and give their respective consent to enter in to marriage. /Art. 2 of RFC/

[Article 3361 of the Civil Code] As a result, currently there is no established office of civil status.

In order to conclude civil marriage, there are certain formalities and requirements which are stipulated by the RFC. The first formality is that of a residence. /Art. 22 of RFC/

The other formality is that of giving notice. The RFC requires the future spouses to inform the officer of Civil Status of their intention to conclude marriage not less than a month before the celebration of the marriage. [Article 23 of the RFC]

The purpose of notifying the officer is to make sure that there are no impediments to the conclusion of marriage and to allow anyone who want to oppose to the marriage to do so in accordance with the law.

Once these preliminary formalities are fulfilled and the work of publicizing the intention of the parties to marry has been made by the civil status officer, the next step is the celebration (solemnization) of marriage. Celebration of marriage is to be made publicly in the presence of the future spouses and two witnesses for each of the future spouses.

[Article 25/1 of RFC] One requirement stipulated under article 25 of the RFC is that the future spouses have to personally appear for the solemnization process.

Considering the need to conclude marriage by representation, the Civil Code of 1960 as well as the RFC allowed by way of exception for the conclusion of marriage through representation. One should note here that in principle each of the future spouses are required to appear personally and give their consent to the marriage at the time and place of celebration. [Article 12/1 cum article 25/1 RFC] and Art. 586 of cc. However, if one of the parties, for serious cause, could not be personally present, marriage by representation may be allowed by representation.

The other formality incorporated under article 25 of the RFC is the obligation on the witnesses to declare, under oath, that the essential conditions for marriage are fulfilled.

The third formality requirement for celebration of civil marriages is that the future spouses need to declare openly that they have consented to enter in to the marriage.

After the fulfillment of all the above mentioned formalities, what is left is for the Officer of civil status to pronounce them united in marriage and issue a certificate of marriage. [Article 25/6 of the RFC]

2.3.2 Religious Marriage/Art. 3 of RFC/

The second type of marriage which is given recognition by the RFC is religious marriage.

The formal requirements for the conclusion of religious marriage are dictated by the religion itself. This is further corroborated by article 26/1. Hence, the conclusion of the religious marriage as well as the formalities to be followed are as prescribed by the concerned religion.

2.3.3 Customary Marriage/Art. 4 of RFC/

Ethiopia is a nation which is believed to be home of more than eighty tribes. These different tribes have their own peculiar customs. The diversity in the customs of the people has been recognized by the 1995 FDRE Constitution. Particularly, Article 34/4 of the Constitution stipulates for the enactment of a specific law which gives recognition to marriage concluded under systems of religious or customary laws. In light of this obligation, the RFC gives the future spouses the option to conclude their marriage in accordance with customary practices.

The conclusion of the marriage as well as the formalities, hence, is to be prescribed by the concerned community. Here also note should be made to the effect that the customary marriages also need to observe the essential conditions of marriage stipulated by the RFC.

2.3.4 Marriage Celebrated Abroad

The other new introduction in the RFC is the recognition of marriages that are celebrated abroad.

Article 5 of RFC provides for the recognition of marriages which are celebrated abroad as valid in Ethiopia.

Essential conditions for the conclusion of a valid marriage.

2.4.1 Consent

Marriage is an institution which is to be entered in to by the parties with their free and full consent.

Pursuant to article 1 of the UN Convention, no marriage shall be legally entered into without the full and free consent of both parties.

Ethiopia is one of the countries who have acceded to this Convention. As a result, the Constitution/Article 34/2 of the Constitution/ as well as the RFC and the regional family codes incorporate consent as a validity requirement of marriage.

The RFC recognizes some grounds which would vitiate the consent of the spouses.

- **Fundamental Error/** 13/2 of the RFC/

The first ground which is considered as a base for vitiating consent of the parties is error.

- **Violence (Duress) /** article 14 of the RFC/

The other ground which would vitiate the consent of spouses to enter in to marriage is violence. If the consent to marry was extracted by violence, it cannot be said that the party has freely consented to the marriage.

- **Judicial Interdiction**

Judicial interdiction exists in the cases where a person is insane according to article 339 of the Civil Code and where he has bee n interdicted by the court. The court orders interdiction of the person because his health and his interest so requires or because his heirs' interest so require. [Article 351/1 and 2 of the Civil Code] These two conditions have to simultaneously be present for the court to give order of interdiction. The order of interdictions means the interdicted person will have lessened capacity and hence need to be protected.

An interdicted person may conclude marriage only with the authorization of the court. [Article 15 RFC]

2.4.2 Age

Under Ethiopian law marriage is an institution to be entered in to by the full and free consent of the parties. In order to freely consent to the marriage, the parties should understand the consequences of their acts, and hence need to attain a certain age.

The minimum marriageable age is 18 years for both sexes.

Hence, any person who has not attained the full age of 18 years may not conclude a valid marriage. However, there are circumstances in which a valid marriage could be concluded without the fulfillment of this requirement. This is provided as an exception under sub article two./ Art. 7 of RFC/.

2.4.3 Relationship

The other essential condition for the conclusion of marriage is relationship, or rather the existence of prohibited degrees.

The restrictions under the RFC are based on two groups of relations: those based on blood relationships i.e. consanguinity and those based on marriage, i.e. affinity. These restrictions were also maintained under the 1960 Civil Code, though with a different degree of restriction.

The prohibited consanguinity restrictions involve marriage between persons related in the direct line between ascendants and descendants. [Article 8/1 of the RFC]

There are different reasons given for prohibiting marriage between related persons. The first argument is the fear of genetic danger involved in permitting procreation between close blood relatives.

The other arguments raised for the restriction include

'...permitting marriage between close relations may undermine the security of the family. The argument is that children should be brought up without the possibility of approved sexual relations latter in life with the members of their family. The third argument can be based on the widespread instinctive moral reaction against such relationships.

Marriage between persons who are related by affinity in the direct line is also prohibited under the RFC article 9.

Hence, it can be argued that the reason for such prohibition in the affiny is one of moral, rather than scientific.

2.4.4 Bigamy/ Art. 11 of RFC/

The other essential condition for the conclusion of a valid marriage is the absence of prior marriage.

Polygamous marriage may cause *divisions within the family, regarded as a form of sex Discrimination, an insult to the religious sensitivities of the majority.*

2.4.5 Period of Widowhood

The concept introduced here by the legislature relates to the fact that a woman is under prohibition to remarry within the next one hundred and eighty days following the dissolution of her former marriage. [Article 16 of the RFC]

The rationale for the limitation under article 16 is to respect the right of children enshrined in the Constitution and other international human right instruments to which Ethiopia is a party. Article 36/1/c of the 1995 FDRE Constitution provides that each child has the right to know and be cared for by his/her parent or legal guardian.

In addition to this right, article 128 of the RFC provides a presumption as to the duration of pregnancy. In order to respect the right of children and also to comply with the presumption, it is necessary to avoid any circumstances which would create a doubt as to who the father of that child is.

Hence, by requiring the female to wait for a period of 180 days following the dissolution of a previous marriage, the law tries to avoid any conflict of paternity.

2.5 Opposition to Marriage

As discussed earlier, marriage is an institution to be entered in to with the full and free consent of the parties. This assertion suggests that it is primarily the parties themselves who will have a say on whether they should be joined by matrimony or not. However, from our discussion on chapter one, what we can also infer is that the society and the state also have interest in the marriage of the two individuals.

Who may oppose?

Depending on the essential condition which is violated, the persons who may oppose to the conclusion of the marriage differ. When the condition violated is age/Art. 18(1) of RFC, there are potentially three groups of persons who are given the right to oppose. The first one is the parents of the minor.

And also the law gives the public prosecutor the right to oppose the underage marriage because underage marriage is a criminal act.

Last but very importantly, the law gives 'any other interested person' a right to oppose the underage marriage/ persons who have vested interest/.

When the essential condition violated is relationship by consanguinity or affinity, the right to oppose the marriage is given to the ascendants of both or one of the future spouses as well as their brothers and sisters who have attained the full age of 18 years /Art. 18(2) of RFC/.

In cases of bigamous marriages, there are two persons who may oppose. The first one is the previous wife or husband of the bigamous spouse. [Article 18/c of RFC] Bigamy is considered under the criminal code of 2004 as a crime, unless it is justified by the religion or custom of the person. Hence, the public prosecutor has some interest in the prevention of conclusion of this kind of marriage.

In the case of judicial interdiction, it is the guardian of the interdicted person and the public prosecutor who may oppose to the marriage. [Article 18/d of RFC]

The next question to be raised in relation to opposition is 'to whom should it be made?' this is answered by referring article 19 of the RFC. (for marriage celebrating officer not to the officer of civil status).

In order to show the seriousness of the case, the opposition is required to be made in a written form. Hence, there is no oral opposition to marriage. There is also a time limit attached. The opposition has to be made 15 days before the celebration of marriage.

The other very important issue in relation to opposition is issue of appeal from the decision on opposition. The person to whom opposition is made has to make its decision within five days. [Article 20/1 RFC] If the celebrating officer rejects the opposition and decides to continue the celebration of the marriage, the decision will be final one.

However, if the decision is to accept the opposition and suspended the celebration of the marriage, the future spouses or one of them may appeal to the court against the decision.

[Article 21/1 RFC] This article shows the weight given to the right of the future spouses to form family.

2.6 Effects of Violation of Essential Conditions of Marriage

Three categories then emerge. The marriage which is void ab initio, that is which never came in to being or had any effect; the marriage which is void retroactively, (ex tunc), that is which came into being, would have been valid had it not been found out, but is not deprived of all effect: and the marriage which is void ex nunc, that is which is deprived of effect for the future but which holds good for the past. The only category into which the Ethiopian marriage law clearly falls is that of void ex nunc.

Unlike other legal systems the Ethiopian law recognizes only voidable marriages. A marriage which has been concluded when one or more of the essential conditions are lacking will be invalidated /Art. 37 of RFC and Article 38 RFC and Article 39 RFC/. That is to say, from the date of invalidation, the marriage will cease to exist, and the consequences of dissolution of marriage will follow. However, for the time being that the marriage was intact, it will be considered as a valid marriage.

The other very important thing that needs to be noted here is the change made by the RFC in respect of provisions dealing with punishment for violation of essential

conditions. The Civil code, apart from providing for the civil consequences of violating essential conditions, also makes reference to the Penal Code for criminal punishment.

However, the civil code did not show the exact punishments accompanying. As a result maintaining these provisions was not necessary. The RFC provide only the civil consequences and if one wants to know the criminal consequences, reference has to be made to the Criminal code.

As far as the consequence of violation of essential conditions is concerned, we may classify the conditions in to three categories. The first one is the **impediment to the celebration of the marriage** which does not affect its subsequent validity, its purpose being only **prohibitory.**

The other group of impediments relates to those which will prevent the marriage from taking place and make the marriage voidable if it takes place, but for reasons occurring after the marriage, the impediments cease to exist and the marriage becomes valid. 'The distinguishing aspect of this group is that the marriage, although voidable after celebration and thus open to dissolution, can be subsequently validated. This means that the marriage which is voidable after its celebration due to a defect therein can subsequently become valid through the *ex facto* removal of the impediment or by the passage of time. This process is known as validation'.

The Criminal Code, on the other hand, attached criminal sanction on this voidable but validatable marriage. A person who concluded marriage with an underage, knowing that she has not attained the minimum marriageable age stipulated under the family law, will be subject to rigorous imprisonment for not more than three years. This is so if the victim is 13 years and above. However, if the victim is below 13 years, the punishment will be a rigorous imprisonment not more than seven years. [Article 648 of the Criminal Code]

Bigamous Marriages: - the bigamous marriage also falls into the category of marriages which are voidable but validatable. Either spouses of the bigamous marriage and the public prosecutor are given the right to apply for the dissolution of the bigamous marriage. [Article 33 RFC] The application for dissolution may be made only as long as the former spouse of the bigamous marriage is alive. If however, the former wife dies, it can be validated. A

presumption of validity is attached to bigamous marriages until avoided by dissolution. 'Nevertheless the bigamous marriage is unique in that its validation does not come about automatically after a lapse of time; its validation occurs upon the death of the first spouse.'

Article 650 of the Criminal Code, on the other hand, stipulates the criminal consequence of concluding a bigamous marriage.

However, if the family law of a certain region allows the conclusion of a bigamous marriage, there is no reason for the criminal code to penalize those who concluded a bigamous marriage. [Article 650 of the Criminal code]

Defect in consent/Art. 34- 36 of RFC/

When the consent is vitiated as a result of an act of violence, the party who concluded the marriage under the influence may apply to the dissolution of marriage. However, the application cannot be made six months after the cessation of the violence. So, the party seeking for the dissolution of the marriage has to make application at the time when the violence is still intact or alternatively within six months after the cessation of the violence [Article 35 RFC]. There is also a two year absolute limitation which will be counted beginning from the date of conclusion of marriage. Once these time limitations have passed, the marriage becomes a valid one.

Apart from dissolution of marriage which suffers from a defect in consent, there is also a criminal sanction attached. The party who has concealed the existence of one or more conditions which will cause the dissolution of marriage will be punished by simple imprisonment not exceeding two years and a fine not exceeding five thousand birr. [Article 646 and 647 of the Criminal Code]

The third category of impediments is absolute impediments.

Under this falls relationshipby consanguinity and affinity.

'These obstacles are so grave that they can never be cured and therefore the marriage can never be validated….if a couple are married despite this impediment their marriage remains voidable.' That means it may be dissolved at any time. The public prosecutor and any other interested person are given the right to apply for the dissolution of such marriage.

2.7 Summary

As we have discussed in the first chapter, one of the sources of family relationship is affinity, which is created as a result of

existence of marriage. Marriage is defined in some laws as the the voluntary union for life of one man and one woman to the exclusion of all others. The Revised Family code of the FDRE however, does not give any definition of marriage. However, from the different provisions governing the formation and effect of marriage, one can conclude that the definition given above can hold water for our system as well.

In earlier times, before two persons conclude marriage, they will go through the process of betrothal. Betrothal is defined as a contract between the members of two families that a marriage shall take place between two persons, the fiancé and the fiancée, belonging to these two families. From this definition we can see that mainly the betrothal was concluded between the parents of the future spouses, and not by the fiancé and fiancée.

This system of betrothal has been excluded from the federal family law, whereas it appears with some modification in regional family codes.

The Revised Federal Family Code as well as the Regional Family Codes recognize three modes of conclusion of marriage: Civil Marriage, Religious Marriage and Customary Marriage. The RFC also recognizes marriages celebrated abroad as far as they are not contrary to public morality. To conclude marriage in any one of the three forms, however, there are essential conditions which need to be fulfilled. These essential conditions are related to biological, sociological and psychological factors. The biological factors relate to age, sex and state of health of the future spouses, whereas the psychological factor relates to the freedom of will of the parties. On the other hand, the sociological aspect pertains to issues like marriage between persons related by consanguinity and affinity as well as by adoption and it also incorporates bigamy. Failure to observe these essential conditions may result in dissolution of the marriage depending on the condition. It may also entail criminal responsibility.

Chapter Three: Effects of Marriage

Introduction

Generally we can classify the effects in to two: personal and pecuniary.

The personal effect relates to the obligation of the spouses to support, respect and assist each other as well as to cohabit among others. On the other hand, the spouses may acquire property either before the conclusion or during the lifetime of the marriage. One important issue which arises as a result is the

ownership of such property. In connection with the ownership of property, it is also essential to see the right of third parties who are creditors of the spouses.

Objectives

- Discuss the personal effects of marriage
- Distinguish the difference between contract of marriage and certificate of marriage
- Analyze the pecuniary effects of marriage

3.1 General overview

In discussing about the effects of marriage, one thing that needs to be always taken in to account is the fact that all marriages produce the same legal effect, without considering the mode of their celebration. [Article 40 RFC] As far as the marriage is concluded in compliance with the essential conditions of marriage, which are valid for all modes of conclusion of marriage, the effects of all marriages are identical.

In addition to considering all marriages as having the same legal effect, the law also avoided the requirement of consummation as a condition for the marriage to have legal effect. [Article 41 RFC] Hence, a marriage, once celebrated will have an effect without having regard to the fact of consummation of the marriage.

Under Ethiopian law as well the freedom of the parties has been recognized by allowing them to sign contract of marriage before or on the date of their marriage. Here we have to distinguish between a contract of marriage and certificate of marriage. Certificate of marriage refers to the document to be drawn by the officer of civil status which shows the conclusion of marriage of the parties. On the other hand, as per article 42/1 of the RFC, a contract of marriage is a contract which is signed by the spouses before or on the date of their marriage for the purpose of regulating their personal relations and the pecuniary effect of their marriage.

Though the spouses are given the freedom to regulate the personal and pecuniary effect of their marriage, this freedom is not without limitation. As per article 42/3 of the RFC, the parties are not allowed to derogate from the mandatory provisions of the law.

Moreover, the parties may not also impose an obligation on third parties. [Article 46/1 RFC] The contract of marriage is signed by the parties to regulate their relationship, and not the relationship between the spouses

with third parties. Hence, this limitation was imposed in the law.

When we come to contract of marriage, article 44 of the RFC stipulates a special form to be observed by the parties. The contract of marriage has to be made in a written form and needs to be attested by four witnesses, two from each side. A contract of marriage is somehow peculiar than the other contracts owing to the nature of relationship existing between the contracting parties.

The contract of marriage, if valid under the law, will govern the pecuniary effects as well as the personal relationship of the spouses. However, if the parties did not conclude a contract of marriage, or if the contract is not valid, the law intervenes and regulates their relationship.

3.2 Personal effects of Marriage

Marriage produces special obligations between the husband and the wife as a result of their status as spouses.

The 1995 FDRE Constitution guaranteed the equality of both spouses at the time of entering in to and during marriage. Ar635/2 and 644 of the civil code are repealed by the RFC.

3.2.1 Respect, Support and Assistance

Both spouses owe respect, support and assistance to each other. [Article 49 RFC] It is the first of all duties and it acts as the foundation as the object of marriage is the establishment of family which requires the assistance and respect of each other.

The duty is always to be observed irrespective of the health of the spouse.

3.2.2 Family Management

The other personal effect of marriage is related to the management of family and care of the children. The Constitution under article 34/1 recognizes the equal right of the spouses at the time of entering in to, during marriage and at the time of divorce. Art. 50 RFC.

3.2.3 Cohabitation

The other fundamental obligation of the spouses is the duty to cohabit. [Article 53 RFC]

One of the purposes of formation of marriage is to establish life in common. If the duty of cohabitation is not fulfilled, the union of the spouses is destroyed. The obligation of living together includes the conjugal duty.

The duty of cohabitation is a conditional duty. 'It is conditional in the sense that it is subordinated to the accomplishment of all the obligations flowing from marriage.'/Art. 55 of RFC.

3.2.4 Duty of fidelity

From the moral point of view, the principal duty created by marriage is the duty of fidelity. / Art. 56 of RFC.

'The duty of fidelity is not a duty of mere morality; rather it is sanctioned by positive law.' Article 652 of the Criminal Code makes adultery a crime punishable upon complaint.

3.3 Pecuniary Effects of Marriage

Marriage also affects the pecuniary relationship of the spouses.

3.3.1 Personal property

Marriage results in the unification of the spouses and not their property. As a result, the law recognizes the existence of personal property in marriage. Hence, the property which the spouses possess on the day of their marriage, or which they acquire after marriage by succession of donation, will remain their personal property. [Article 57 RFC] In addition, if the spouses get property through either succession or donation, then that property will remain to be the personal property of the successor or donee.

For instance, the husband may need to sell the car which he succeeded from his late father and buy a new one. Would the new car remain to be his personal property or would it change to common property? / Art. 58 of R/.

3.3.2 Common Property of Spouses

The first category of property which is considered as common property is the income of the spouses. /Art. 62(1) of RFC/

The sources of the income can be three: personal efforts of the spouses, meaning the income acquired through employment, income derived from the common property, or thirdly, income derived from personal property.

Irrespective of its source, income is the common property of both spouses. Income of the spouses is made common property because it is the means of living of the spouses themselves as well as the children.

The second category of property which is considered as common property of the spouses is property acquired during marriage by an onerous title. [Article 62/2 RFC] Hence, all property which has been purchased by the spouses are either of them during their marriage will be considered as common property.

3.3.3 Management of Personal and Common Property of Spouses

The other important issue which needs to be discussed in relation to personal and common property is the management of such property. Who has the power to administer and manage the personal property of the spouse? What about the common property?

As the law clearly stipulates under article 59, each spouse is to administer his respective personal property. However, through the contract of marriage, administration of the property may be entrusted on the other spouse. Moreover, there is also the possibility of assigning the other spouse through the contract of agency. [Article 61 RFC]

One question which needs to be raised here is whether the contract of agency concluded between the spouses require the approval of the court as per the requirement under article 73 of the code. The contract of agency entered in between the spouses for the administration of personal property of one of them will not require, unlike other contracts, the approval of the court.

As far as the management of income of the spouses is concerned, each spouse is given the mandate to receive his earnings. [Article 64/1 RFC]

3.3.4 Debts of Spouses

Generally, debts of spouses may be classified either as personal debt or debt incurred in the interest of the household.

If the debt is a personal debt incurred by one of the spouses, third parties will first proceed on the personal property of the indebted spouse. However, if the indebted spouse does not have personal property, the debt will be recovered from the common property of the spouses. [Article 70/1 RFC] The reason for allowing recovery of personal debt from common property seems to be the need to give creditors wider right.

On the other hand, debts incurred in the interest of the household are considered as joint and several debts and will primarily be recovered from the common property of the spouses.

If the common property is not enough to cover the debt, the creditor may proceed to the personal property of either of the spouses.

3.4 Summary

There are three modes of conclusion of marriage. Despite the different modes of conclusion, marriages produce the same legal effect. That is to say, the effects of marriage are always identical. These effects

of marriage pertain to the personal and pecuniary relationship of the spouses.

Marriage engenders special obligations between husband and wife which are the result of their status as spouses. However, in many legal systems the parties themselves were given some degree of freedom to determine the effect their marriage will produce through the conclusion of a premarital agreement. The revised family code as well as the regional family codes also allows the formation of contract of marriage between spouses. If the parties do not govern the effect of their marriage through contract of marriage, the law intervenes. As mentioned earlier, marriage produces special obligations between the husband and the wife as a result of their status as spouses. As such, they have the obligation to respect, support and assistance to each other, obligation to cohabit; they also have the duty of fidelity. On the other hand, the parties may have property during their marital union. This calls for regulation of pecuniary relation. Consequently, the law classifies the property in to common property and personal property.

Chapter Four: Proof of Marriage

Introduction

Family is the basic component of any society. Marriage is one of the means in which this basic element of the society may be established. Through the institution of marriage, the family which is the fundamental unit of the society is founded. As a result, marriage entails its own consequences and the spouses who are joined by marital bond assume different obligations towards each other. As a result, any person who can show the existence of marital bond may request the fulfillment of these obligations. One important question that can be raised in this relation is how does one prove the existence of marriage?

Objectives

- Analyze international legal instruments to which Ethiopia is a party and domestic legal instrument requiring the registration of marriage
- Discuss the need to register marriage
- Identify the modes of proof of conclusion of marriage
- Distinguish proving marriage by certificate of marriage and possession of status

4.1 Registration of Marriage

The Revised Family Code declares mandatorily that marriage shall be registered by a competent officer of civil status. Such registration is to be conducted irrespective of the form of celebration of marriage.[Article 29 RFC] The officer of civil status who has celebrated the marriage has also the obligation to issue a certificate of marriage to the spouses. /Art. 28, and 321 of RFC/.

4.2 Proof of Marriage by Certificate of Marriage

The law considers certificate of marriage as the primary means of proving marriage.

One way or another, the certificate issued by the officer serves as a primary means of proving the celebration of marriage. /Art. 29 of RFC/.

The certificate of marriage can be relied upon by those persons who seek to get some benefit from the conclusion of marriage. This includes the spouses themselves as well as the children. The certificate of marriage proves the fact of celebration of marriage. That is why other documents like the contract of marriage are excluded.

4.3 Proof of Marriage by Possession of Status

In many circumstances, for various reasons marriages may not be registered with the appropriate organ. There are also some exceptional circumstances in which the marriage certificate duly drawn may be lost or destroyed. In such circumstances, the law by way of exception allows proving marriage by possession of status.

Planiol defines possession of status as the fact that a man and a woman who live together are deemed to be married by those who know them. More or less the same definition is given under article 96 of the RFC.

4.4 Summary

For a person to claim the benefits accruing from marriage, he/she has to show that there actually exists marriage. One basic question which arises as a result is how to prove the existence of marriage. One way of proving existence of marriage is by producing marriage certificate. The Revised Family Code declares mandatorily that marriage shall be registered by a competent officer of civil status. Such registration is to be conducted irrespective of the form of celebration of marriage. This requirement of the RFC is in line with the country's international commitment reflected under Article 3 of the Convention on Consent to

Marriage, Minimum Age for Marriage and Registration of Marriages.

The law considers certificate of marriage as the primary means of proving marriage.

However, in many circumstances and for various reasons marriages may not be registered with the appropriate organ. There are also some exceptional circumstances in which the marriage certificate duly drawn may be lost or destroyed. Considering this possibility the law introduced another way of proving existence of marriage; through possession of status. Possession of status may be defined as the fact that a man and a woman who live together are deemed to be married by those who know them. One very controversial issue regarding this is what is supposed to be proved by possession of status; celebration of marriage or fact of living together?

Chapter Five: Dissolution of Marriage

Introduction

'The dissolution of marriage is the breaking of the conjugal bond and the cessation of the effect the union of the spouses produce either as regards them or as regards third parties.'[Planiol, 625] There are various reasons for the dissolution of marriage. These causes can be classified in to two: operation of the law and act of the parties i.e., divorce.

Objectives

Having completed this chapter, students should be able to:

- Distinguish the different grounds of dissolution of marriage
- Understand the development of divorce in selected legal systems
- Identify the reasons for adopting a no fault divorce system
- Discuss the effect of dissolution of marriage

5.1. Grounds of Dissolution

5.1.1 Dissolution by Operation of the Law

Death of one of the spouses. /Art. 75/a of RFC/. The death of one of the spouses brings the marital conjugal to an end. Apart from actual death of one of the spouses, the law also recognized declaration of absence as another ground for dissolution.

Apart from these three causes for dissolution of marriage by operation of the law, the actions of the parties could also be a reason for dissolution (divorce).

The law classified divorce in to divorce by mutual consent and by petition. One thing that needs to be noted here is in both types

of divorce, an application has to be made to the court. That is to say, the power of declaring divorce is given only to the court.

5.1.2.1 Divorce by Mutual Consent

The RFC allows parties to seek for divorce by mutual consent. Considering the freedom of the parties, the law allows the spouses to petition for divorce by agreement. /Art. 77 and 78/1 and 79 and 80 of RFC/.

5.1.2.2 Divorce by Petition

The other way of ending the conjugal union by divorce is when one of the parties requests the court to end the marriage. In the case of mutual consent divorce, both parties have agreed as to the separation as well as the consequences of their separation. In divorce by petition, it may be only one of the spouses who requests for the ending of the union; or alternatively, both the spouses my request the divorce. /Art. 81 of RFC/.

(Art 84 of RFC is related article).

5.2 Effects of Dissolution of Marriage

The disintegration of the family will have its own consequences on children born from the marriage and the property acquired during the lifetime of the marriage.

5.2.1 Child Custody

On two grounds courts and any other bodies are required to look in to the best interest of the child in determining any issue which affects the child. First, by virtue of article 9/4 as well as 13/2 of the Constitution, international treaties ratified by Ethiopia are the integral parts of the law. The CRC, which is ratified by Ethiopia, is made the integral law of the land, and hence reference must be made to it by the concerned organs at relevant times. Secondly, the Constitution itself mandates the observance of the best interest of the child in all matters concerning children. As a result, the actions of public organs, courts as well as legislatures should take in to account this principle.

The best interest of the child means all relevant factors to be considered and evaluated by the court including

i. The wishes of the child's parent or parents as to custody

ii. The reasonable preference of the child, if the court deems the child to be of sufficient age to express preference

iii. The child's primary caretaker

iv. The intimacy of the relationship between each parent and the child

v. The interaction and interrelationship of the child with a parent or parents, siblings,

vi. The child's adjustment to his home, school, and community
vii. The mental and physical health of all individuals involved
viii. The child's cultural background…

Article 113 of the RFC deals with the role of the court in determining custody of children after the pronouncement of divorce. By virtue of this article, there are three questions to be addressed by the court at the time of determining custody case. The first is who should have custody of the child? /Art. 221/1 and 221/2 of RFC/. The second question is in relation to the maintenance of the child, how much should the non custodial parent give for the maintenance of the child?
The third important question is the right of the non custodial parent to visit the child.

5.2.2 Liquidation of Pecuniary Relations

(Art. 83, 89, 90, 91 of RFC)

5.3 Summary

Marriage ideally is a life mateship of a man and a woman based upon mutual and continued choice and affection. However, the ideal is not always realized in practice, and marriages dissolve and disintegrate for different reasons. 'The dissolution of marriage is the breaking of the conjugal bond and the cessation of the effect the union of the spouses produce either as regards them or as regards third parties. There are different grounds for dissolution of marriage. The grounds are generally divided in to dissolution by operation of the law and divorce. The marriage may be dissolved by operation of the law either due to the death of one of the spouses or the declaration of absence of one of them. The other ground for dissolution is divorce. Divorce is defined as the rupture of a valid marriage during the life of the two spouses. The Civil Code has classified the grounds for divorce in to grave and simple. As a result, it has introduced "divorce hindrance devices" which would discourage parties from seeking divorce. However, studies which were conducted at the time of drafting the RFC show that the fault based divorce system has its own drawbacks decided to exclude the requirement of fault for seeking divorce.
The law recognizes both divorces by mutual consent and by petition. One of the spouses may apply for the court to pronounce divorce. In this relation one other change by the RFC is exclusion of mandatory arbitration for family disputes. Unlike the Civil Code, the RFC provides for optional

arbitration of family disputes. Hence it is only the court which is competent body to pronounce divorce. Related with this power of the court, one problem observed is determination of the status of couples who were married but have ceased to live together for a long period of time, but without securing divorce from the court. Can we consider the marriage to be still intact?

When we look in to the effect of dissolution of marriage, we may classify them in to pecuniary effects and custody issues. After dissolving the marriage, who gets to have the property? With whom should children be placed? The RFC as well other regional family codes provide guidelines for these questions.

CHAPTER SIX
IRREGULAR UNION

6.2. Objectives

- discus the essence of irregular union.
- differentiate irregular union from marriage.
- analyze the need to protect irregular union.
- analyze the effects of irregular union.
- discuss modes of proof of irregular union
- discuss termination of irregular union.
- apply the rules on irregular union to actual life situations.

6.3. The Concept of Irregular Union

In legal theory, the term is defined as the union of a man and woman established solely by the consent of both parties. Like the institution of marriage, it is intended to be potentially indefinite in duration and the parties cohabit in the same household as a man and wife. Actual domestic cohabitation is essential. In other words, cohabitation does not mean mere sexual gratitification. Rather it means to live together, to have the same habitation.

It has been said above that irregular union is analogous to marriage.

Generally, according to a certain author, two important elements may be drawn as regards the similarity between marriage and irregular union:

"The first element is composed of intimate life as between husband and wife and is founded on the relationship of affection and love, devotion and loyalty, that is indicative of their having pledged themselves to common fate. This actual domestic cohabitation is essential. The second element is the running of a common household, not simply out of personal need, convenience, narrow financial considerations, or as a self- standing arrangement, but as a natural function of the joint family life, as is customary and usual between husband and wife attached to each other by the bond of common destiny.

A household of this kind is different from, for instance, the situation of employing a housemaid or a nursemaid, even though it happens that the employer engages in sexual relations with her."

6.4. Why Do People Live in an Irregular Union?

Why do you think do a man and a woman live together without concluding formal marriage?

In addition to the historical background of non-marital cohabitation (irregular union) and the cultural transformations, people may choose irregular union over marriage due to different motivations.

Some couples feel that the commitments and burdens of marriage outweigh its advantages and hence engage in irregular union. The other reason is that no costly legal procedures are required to establish and terminate the relationship. Besides, irregular union, as a **de facto** relationship, gives the opportunity to define and specify the terms of their relationship individually. They can define the terms of their personal property relations freely irrespective of the essential rights and duties which are inherently and compulsorily attached to a formal marriage.

There are also some additional reasons which make couples enter into an irregular union.

Motivations of economic nature are the first. It may also happen that the parties decline to go through a marriage ceremony. As a result, they simply agree to live together without any ceremony or formality. Financial constraints in affording the expenses of a wedding, the presence of legal impediments (for instance the inability of obtaining divorce for those who have already concluded an indissoluble marriage) militate against formal marriage).

6.5. The Need for Legal Protection

Why do various jurisdictions accord legal protection to irregular union?

‘’’’

satisfied in marriage must be satisfied in irregular union too. **Do you agree? Why/Why not?**

(A) Consent

Cohabitation without marriage (irregular union) is defined as the union of a man and a woman established solely by the consent of both parties.

(B) Capacity

Regarding age, the FDRE Constitution under Art.34(1) provides that marriage is concluded when the spouses attain the marriageable age. The marriageable age is determined by the Ethiopian family laws to be eighteen years of age for both spouses.

The family laws do not, however, have comparable provisions which expressly or impliedly prohibit the formation of irregular union by minors. In spite of the absence of such provisions, it is tenable to maintain that the minimum age limit prescribed for marriage should be applicable to irregular union by taking into account the policy consideration for the requirement of age and from the view point of protecting children.

(C) Prohibited Degrees

However, the same prohibition is not noticeable under the Ethiopian family laws as regards irregular union. But by taking into account the rationale behind prohibition of marriage between persons who are relatives by consanguinity, it is possible to conclude that it is not acceptable to form an irregular union by violating the prohibitions provided by law.

Another prohibition both under the Civil Code and the current family laws is marriage between affines.

(D) Other Impediments

From the above discussions, it is possible to conclude that consent, capacity and fulfillment of conditions with regard to consanguinal and affinal relationships are elements of formation of a valid irregular union. How about period of widowhood and the existence of another irregular union?

6.6.2. Legal Effects of Irregular Union

(A) General Considerations

6.9. Summary

Men and women establish various intimate relationships. Among such relationships, marriage is the typical one. However, men and women live together in an irregular union for various reasons. The causes that may make man and a woman to live together without concluding formal marriage may be economic, social and other reasons.

Because family is established under such union, the law should give recognition to such union with a view to protecting such family, particularly the rights of children

born from this union and the rights of women with respect to their right to equality with men. That is why, Ethiopian family laws, both the federal family law and regional family laws, have given recognition and protection to irregular union although the protection accorded to partners in an irregular union is not equal to protections given to spouses in marriage.

In Ethiopia, irregular union produces certain legal effects. The first thing is that it creates community property so long as the parties have lived together for not less than three years. Secondly, partners are duty bound to contribute to the common expenses of the family in accordance with their means. Thirdly, if the parties entered into transactions and are indebted to third parties in the interest of the family, they are duty bound to discharge such debt according to the law. The other most important effect of irregular union is the fact that a child conceived or born in this union is deemed to be the child of the man who was with the women during conception or birth of such child.

Irregular union in Ethiopia is quite different from marriage in many respects. One difference is that irregular union is proved by possession of status while marriage is proved by record of marriage and possession of status. Even in the case of possession of status, proof of irregular union by possession of status is not similar to proof of marriage by possession of status.

Irregular union is freely formed by the parties without following the rigorous procedures of marriage. Similarly, it can be terminated by one of the partners without any reason although a partner who ended the union by committing fault is required to pay compensation to the other partner.

CHAPTER SEVEN
FILIATION

7.2. Objectives

- define filiation
- explain how maternal filiation is established and such filiation is contested.
- differentiate and analyze the modes of establishment of paternal filiation.
- analyze rules pertaining to disowning.
- discuss the rules applicable to proof of filiation.
- give ruling on actual issues pertaining both to maternal and paternal filiation.

7.3. Maternal Filiation

It must be clear to you that the maternal filiation is the basis for the whole consanguinal relationship since the relationship of kinship by blood emanates from this very relationship. The family

relationship consists of three distinct statuses. The status of being brother and sister, father and child is established only after the establishment of maternal filiation. (Art. 125 of RFC)

The presumption of paternity flows from maternity. A person will be a father of a child because of the presumption if such a man had relationship provided by law with the mother. Hence, the ascertainment of the mother is a necessary requirement to attribute a certain child to a given person in all modes of establishment of paternity.

According to Art.124 of the RFC maternal filiation results from the sole fact that the woman has given birth to a child.

As provided in Art.123 of the RFC, there is no provision that permits an agreement in derogation to the provisions on the establishment of maternal filiation as there are in cases of paternal filiation whereby the presumed fathers are allowed to settle by agreement the possible conflicts of paternity or a father is allowed to assign his paternity to a person declaring to be the father. (Read Arts.146 and 149 of RFC).

(B) Contestation of Maternal Filiation (Arts.163-166 of RFC)

7.4. Paternal Filiation

Accordingly, the family laws have provided modes by which paternal filation is established. Generally, the modes of ascertainment of paternity are divided into three. These are:

(a) presumption of paternity
(b) acknowledgement paternity
(c) judicial declaration

7.4.1. Presumption of Paternity

This is the first mode of ascertaining paternity which provided under the RFC (Arts.126- 130) and the relevant articles of regional Family Laws.

How can presumption of paternity be justified?

As far as children born in wedlock is concerned, there are strong reasons to justify the presumption. Most of the time, it is possible to maintain that a child born in marriage is the child of the husband because of the duties of cohabitation and fidelity. But the presumption in Ethiopia equally applies to irregular union. This invites the question whether or not, the duties in the marriage bond also apply to irregular union.

The first element of presumption of paternity is the existence of legally provided union between the father and the mother.

The second element of presumption is birth or conception within the legally provided union. Art.126 of the RFC provides that "a child conceived or born in wedlock has the husband as father". By the same taken, "a child conceived or born during an irregular union has as father the man engaged in such union", according to Art.130 of the same code. From this, it is possible to say that Ethiopia adheres to the Roman Law principles adopted in many legal systems that says "pate rest quem nuptiae demonstrate" which in

English means the father is whom the marriage indicates. But a child in order to be protected by this basic formula must meet either of two requirements. He/she must either be born or conceived in wedlock, but it is enough that he/she either be conceived or born in wedlock.

7.4.2. Acknowledgment of Paternity

This is the second mode of establishment of paternal filiation recognized both under the 1960 Civil Code of Ethiopia and the current family laws of the country.

(A) Scope of Acknowledgement

This method of establishing paternity, we can say has more practical importance for children born or conceived out of a legally provided union in Ethiopia, where access to the courts is not as such easy to establish paternity. Because of this, voluntary paternal acknowledgment is an important method by which the children conceived or born out of a legally provided union may gain status vis-à-vis their fathers. This voluntary declaration of paternity can be used to establish paternal filiation if paternity is not possible to establish using the presumptions of paternity**. / Art. 131 of RFC/**

To sum up we can conclude that Art.131 is only meant to avoid interference of acknowledgement if the child has an already established filiation by presumption of paternity and not to exclude disowned and incestuous children from the benefit of the voluntary acknowledgement of paternity.

Thus, any child who is merely conceived or born may be acknowledged, in so far as such an acknowledgment does not interfere with an already established filiation as child cannot be acknowledged if he has a father by operation of law. Neither can acknowledgment validly establish paternal filiation if the child has already been acknowledged unless such an acknowledgment is invalidated (See Art.192 of the RFC).

(B) Form of Acknowledgment

The Civil Code adopted stricter and more stringent requirements for acknowledgment this is because Art.748 of the Ethiopian

Civil Code states that an acknowledgment of paternity shall be of no effect unless it is made in writing. Sub article two of the same article provides that except in cases mentioned in Art.146 of this Code [the civil code] the acknowledgement may not be proved by witnesses. The reason for this could be the fact that certain mothers may give their children to a man who could not be the natural father.

Under the old customary rule, mothers were tempted to allege that the father of a given child was the one with a higher social or property status. There were occasions where children were made to have juridical bond to person who could not be their father.

Coming to the RFC and other regional family laws, it has been provided that an acknowledgement of paternity results from the declaration made by a man before an officer of civil status or by a will he made in writing or by a document attested by a competent authority that he is the father of the child. (Read Art.133 of the RFC, Art.144 of Amhara Family Code, Art.150 of Oromiya Family Code and Art.163 of Tigray Family

Code, for instance.) From the above provisions of the law, it is possible to understand that the new family laws have made a significant departure from the 1960 Civil Code of Ethiopia as regards form of acknowledgment. Unlike Art.748 of the Civil Code, which requires that acknowledgement must be made in writing, the RFC and the regional family laws have widened the modes by which acknowledgement is to be made. Accordingly, a man may make acknowledgement of paternity by:

(a) A declaration made before an officer of civil status; or

(b) A will made in writing; or

(c) A document attested by a competent authority.

(C) Acknowledgement to be made by whom

Because acknowledgement is a juridical act greatly attached to the man who makes the acknowledgement, the law, as a matter of principle, provides that acknowledgement is to be made personally by the alleged father of the child. This must be done by the father even if the father has not attained the age of majority. However, acknowledgment may be made by an agent when such agent is specially appointed for this purpose by special power of attorney which must be approved by the court. As a matter of rule, judicially interdicted persons are incapable to perform juridical acts. However, for the purpose of acknowledgement, the law

provides that they have the capacity to make acknowledgement personally. Despite this, acknowledgement by representation is possible provided that the representative has obtained permission from the court to this effect. (Read Art.134 of the RFC). The other situation whereby acknowledgement may be made by a person other than the alleged father is where the father of the child is dead or is not in a position of manifesting his will. In this case, the law permits that acknowledgment may be made in the name of the deceased by one of his parents. In this regard, the new family laws have departed from what is provided under Art.750(2) of the 1960 Civil Code because the latter has provided that where acknowledgement is not possible to be made by the parents of the deceased, it could be made by another paternal ascendant. From this it is possible to maintain that, the great grandparents of the child could make the acknowledgement of the child.

(D) Acceptance of Acknowledgement to be made by whom?

Although acknowledgement, as defined under Art.132 of the RFC, is deemed to be made when a certain man made a declaration that he considers himself the father of a certain child merely conceived or born, it is not a unilateral act of the father. This is because acknowledgement cannot produce effect and cannot establish paternity unless the consent of the mother or in certain exceptional circumstances the consent of the maternal grandparents or the child to be acknowledged is obtained.

According to Art.136 of the RFC, acknowledgement presupposes the admission by the mother of the child or by the maternal grand father or grandmother of the child if the mother is dead or not in position of manifesting her will. And in default of these, the acknowledgement may be accepted by another maternal ascendant or by the guardian of the interdicted person. Acknowledgement cannot be effective unless it is accepted by the child to be acknowledged where such child is of age.

(Art. 136, 137, 138, 139 of RFC)

The prime purpose of acknowledgement is to insure the right of children to know their father and to be cared of such father. In other words, acknowledgement is an important instrument of avoiding fatherlessness.

F. Non-revocability of Acknowledgement (Art.140 of RFC) - Normally, an individual does not make acknowledgement unless he

has justifiable grounds to do so. Hence, he makes acknowledgement when he is, as far as his understanding goes, sure that he is the true father of the child. Once he has made an acknowledgement of his own free (without any external influence or pressure), he is not allowed to revoke the acknowledgement of paternity for allowing revocation of acknowledgement will result in disturbing the status which has already been maintained.

G. Annulment of Acknowledgement

It is clearly stipulated under Art. 141 of RFC.

H. Several Acknowledgements Prohibited (Art.142 RFC) - Naturally, a child cannot be attributed to two or more persons for a child has only one biological father. It is because of this that Art.142 of the RFC prohibits several acknowledgements.

According to this article, where an acknowledgement of paternity has been made in regard to a child, no other acknowledgement of child by another man shall be permitted unless the first acknowledgement has been annulled.

7.4.3. Judicial Declaration of Paternity (Arts.143-145 of the RFC)

This is the third mode of establishing paternity both under the Civil Code of Ethiopia and the new family laws of the country although the new laws have made remarkable departures from the Civil Code by widening the grounds for making judicial declaration by the court (Read Art.758-761 of the Civil Code and Arts.143-145 of the RFC).

7.4.3. Judicial Declaration of Paternity (Arts.143-145 of the RFC)

This is the third mode of establishing paternity both under the Civil Code of Ethiopia and the new family laws of the country although the new laws have made remarkable departures from the Civil Code by widening the grounds for making judicial declaration by the court (Read Art.758-761 of the Civil Code and Arts.143-145 of the RFC).

Under this mode of establishment of paternity, a child who does not have a father either through the operation of the presumption of paternity or by acknowledgement can have a father only if the court declares a certain man to be his father. The court makes such declaration where it is satisfied that one of the grounds which justify judicial declaration of paternity is found. According to Art.758 of the Civil Code the grounds which declaration of paternity by the court was abduction and rape. However, the RFC and

regional family laws have added other grounds of judicial declaration. Art.143 of the RFC.

(Art. 145 of RFC) is exception to Art. 143 of RFC.)

7.4.4. Regulation of Conflict Paternity

(Art. 148, …….)

Assignment of paternity by agreement by virtue of Art.149 of the RFC is possible where the requirements provided there in are satisfied Art.149 of the RFC provides that:

(1) Where the child is born within 210 days from the conclusion of marriage or the commencement of the irregular union, the husband or the man who is living with the woman may, by agreement, assign the paternity of the child to another person who declares that he is the father of the child.

(2) Where the child is born more than 210 days after the dissolution of the marriage or the cessation of the irregular union, the husband or the man who lived with the mother shall have the right provided in the preceding sub-article.

Therefore, the assignment of paternity by agreement is the possible way whereby the father short of the facts sufficient for disowning a child, he thinks is born of another man, assigns his paternal status to the person declaring to be the father, who is not in a position of effecting acknowledgement because the child has a valid paternal filiation by presumption of paternity.

7.4.5. Disowning

(A) Meaning of Disowning

The familiar rule concerning paternity, **'Pater est quem nuptiae demonstat,** which has passed into all modern system of jurisprudence raises a legal presumption that a child conceived during marriage has for his father the husband.

Though this presumption has been accepted in all modern legal systems it is not conclusive. It can be rebutted by the husband of the mother, if he is not in fact the father of his wife's child, by instituting an action to have it judicially declared that he is not the father. This act is called disowning. In France and Louisiana, it is referred to as disavowal. Therefore, disowning, as Planiol defines it, is a "…term applied to the act the purpose of which is to wipe out the presumption of paternity established against the husband, when he cannot be the child's father.

Disowning shows that the presumed father owns the status of paternity. Persons other than the presumptive father have nothing to disown. It is less accurate for the law to use the term "disowning", when after the presumed father death (or incapacitation), his heirs contest the presumption of paternity established against him. Yet, Art.177 of the RFC the uses the term "Action to disown" to designate the action brought by the presumed father's heirs.

B) Disowning as Distinguished from Other Modes of Contesting Legitimacy

In Ethiopia, the presumption of paternity of a person conceived or born in wedlock or an irregular union can be rebutted only by the person to whom the law attributes the paternity by proving decisively that he could not have sexual intercourse with the mother during the period between the 300th and 180th day before the birth of the child (Art.168 of the RFC). In this regard, the law presumes that the spouses shall be deemed to have had no sexual intercourse with one another during the time when they actually lived separately following a petition for divorce made by one of them or in consequence of an agreement concluded between them (Art.169(1). However, this is a rebutable presumption as provided under sub-article two of the same article. This is one aspect of the protection of the presumption of paternity.

Despite this, Art.177 of the RFC permits that where the person to whom the paternity of the child is attributed by law dies or becomes incapacitated within the time fixed by law (i.e., Art.176 of the same code) for instituting the action to disown, one of his descendants, in his stead, may institute an action to disown. Art.177 (2) provides that in default of descendants, the right to disown may be exercised by his father, mother or in their default, by one of his ascendants. In default of ascendants, it may be exercised by one of his brothers or sisters, to the exclusion of any other heir or representative. This action brought to disown a child whose filiation is established by law is stringent both in the mode and time for making it. In our law rebutting of the presumption that the child was born by a married woman is that of the husband is divided into three steps.

First, a contestant may prove decisively that the mother did not have intercourse with him at the time of the child's conception. Second, if the presumption of intercourse is not disproved the contestant may decisively prove that it is absolutely impossible for the child to have been produced by intercourse

between the mother and him. Third, the presumed father could produce any facts to disprove his paternity if the maternal filiation is established by the action to claim status (Read Arts.168, 170 and 176(2) of the RFC).

Finally, let us say few words in connection with plaintiff in suit, defendant in the suit and period of limitation. As we have said previously, in order to maintain the presumption of paternity strong, Art.174 (1) of the RFC stipulates that the presumed father is the only person who can institute an action for disowning so long as he is alive. No action to this effect can be brought by the mother or by a man who claim, the paternity of the child or by the public prosecutor (Art.174 (2) of the RFC). Even a judicially interdicted person can bring such action when he gets permission from the court although he may be represented by his guardian when the guardian obtains permission from the court to do so in the name of the judicially interdicted person (Art.175 of the RFC). As regards the person against whom the action to disown is brought Art.179 (1) of the RFC provides that such action shall be brought against the child or where he/she is dead, against his/her heirs and sub-2 of the same article makes it mandatory that the mother of the child is joined in the suit. Where the child is a minor, obviously, he shall be represented by a tutor ad hoc appointed for this purpose by the court.

The action to disown the child must be brought within the time limit provided by the law.

In this regard, Art.176(1) of the RFC makes it clear that an action to disown shall be instituted by the man to whom paternity of the child is attributed by law within 180 days following the day he knew or should have known the birth of the child. Art176(2) provides that where the maternal filiation is established by an action to claim status, the action to disown shall be instituted within 180 days from the judgment deciding on the action to claim a status having become final. Sub-article one of Art.176 of RFC has departed from Art.792(1) of the Civil Code because in the Civil Code the lapse of 180 days is reckoned from the date of birth of the child while in the RFC the lapse of 180 days is to be reckoned from time when the presumed father knew or should have known the birth of the child. The following court case is pertinent to understand the issue at hand (Civil Appeal No 906, Supreme Court, 1983 E.C).

The appeal was lodged to the Supreme Court from a decision made by the North Shewa High Court decided on the 16th of Hidar 1980 E.C under file No.180/81. The applicant named Girma Habtewold, applied to the Zonal Court to disown a child presumed to have been born of him. The child was born on Tikmit 7, 1979 and the action to disown was instituted on 23rd of Tahisas 1981 E.C. The Zonal Court dismissed his suit reasoning that the action was barred by period of limitation.

In his appeal to Supreme Court the appellant argued that the 180 days must be reckoned following the day he knew or should have known the birth of the child. The respondent on her part argued that since the appellant and the respondent were living in the same town, he should have known the birth of the child.

The appellate court confirmed the decision of the high court and reasoned that actions form disowning should be instituted within 180 days from the birth of the child.

7.5. Proof of Filiation

7.5.1. General

Proof of filiation is not establishment of filiation but it is rather proving the existence of such fact where such fact is contested by interested third parties.

In the modern world, the primary mode of proof of filiation is record of birth. Record of birth, as provided under Art.99 of the Civil Code of Ethiopia, contains the day, month and year of the birth, the sex of the child, the first names which are given to him or her, the names, first names, dates and places of birth of this father and mother and where appropriate the names, first names, date and place of birth of the person making the declaration.

7.5.2. Proof by Record of Birth and Possession of Status

It must be clear to you that record of birth both under the Civil Code and the current family laws is the primary means of proof though not the only means. Despite this when it is not possible to prove filiaiton by record of birth, it is not possible to switch to proof by possession of status. In this regard, Art.155 of the RFC provides in default of certificate of birth, filiation is proved by the possession of status of child.

7.6. Summary

Filiation is an important aspect of family law. It is important because it is through the rules pertaining fililiation that both maternal filiation and paternal filiation can be established. The establishment of filiation is

particularly important to protect the interest of children.

That is why Ethiopian family laws, past and present, have incorporated relevant provisions which are instrumental for the establishment of filiation. The establishment of material filiation is not as difficult as the establishment of paternal filiation. This is because maternal filiation is established by the mere fact of birth although birth is not defined in Ethiopian law and it will remain a source of confusion particularly in view of artificial insemination.

As regards paternal filiation, there are three modes of establishment of paternity. These are legal presumption, judicial declaration and acknowledgment. In the case of legal presumption, once the existence of marriage or irregular union is proved, the law presumes that the husband of the woman or the man in a irregular union is presumed to be the father of the child who is born or conceived in marriage or during the irregular union. However, it must in mind be borne that such presumption is a reputable presumption. Coming to judicial declaration, (when it is possible to prove that what are provided under Art. 143 of the RFC and the corresponding regional family laws), the court is duty bound to declare that a man is the father of the child under consideration.

The third mode of establishment of filiation is acknowledgment. Acknowledgment is dependent upon the free will of the man. In other words, the man freely declares that he is the father of a certain child so long as the stringent requirements of the law are fully satisfied.

As far as proof of filiation is concerned, the law has provided to modalities of proof.

These are proof by record of birth and proof by possession of status.

CHAPTER EIGHT

ADOPTION

8.1. Introduction

In the normal course of circumstances, it is natural filiation which creates parent-child relationships. However, exceptionally an artificial filiation is established by agreement between an adaptor and an adoptee for several reasons.

8.2. Objectives

• define adoption;

• discuss the essential conditions of adoption;

• analyze effects of adoption i.e. both in-country and inter-country;

• analyze the grounds which lead to revocation of adoption.

In general, adoption is a way of home finding to children who have lost their natural parents by death, desertion, or their misconduct, and in a secondary degree for children whose parents are unable or unwilling to maintain them. And it is the practice of absorbing a child into a family that a child is not born into and giving it the legal rights and duties of a child that is naturally born to the adoptive parents.

8.4. Essential Conditions and Effects of Adoption

8.4.1. Essential Conditions (Art. 180 – 194 of RFC)

Art. 184 of the RFC provide that "any person whose age is not less than twenty five years may adopt. Where an adoption is made by two spouses, it is sufficient that one of them be of full age of twenty five years. As regards the age of the adoptee, the RFC provides that any person who is less than 18 years of age and under guardianship may be adopted. This means that once a person has attained majority age, no purpose would be served by adopting that person since is he/she able to maintain himself/herself.

8.4.2 Effects of Adoption

The conspicuous effects of adoption are marriage, succession, maintenance and the like.

A. Marriage

Art. 181 of the RFC also provides that an adopted child shall, for all purposes, be deemed to be the child of the adopter.

Therefore, relationship established by adoption may be an impediment to marriage in accordance with the degrees that are provided by the family laws of the respective regional family laws and the RFC.

B. Succession

Because adoption establishes an artificial filiation, the provisions of the Civil Code dealing with succession both intestate and testate do apply to the adopted child. However, there is no provision under our law which permits or prohibits an adopted child from inheriting his natural parents. But we can raise here two arguments. First the child is considered as a child naturally born into the family of the adoptive parents, he forfeits the right of inheriting his natural parents, for Art.836 says "adopted children shall be assimilated to the other children in case of succession." The other argument is, as the adopted child shall retain his bonds with his family of origin, if so his right to inherit is not in jeopardy as his relation isn't dissolved. However, there is no a provision in the Civil Code which prohibits the

adopted child from inheriting his natural parents.

With regard to the inheritance of the property of the adopted child, it is the family of adoption that is the ascendants, descendants and collaterals of the adoptive parents who have the right to inherit. Since Art. 183(3) of the RFC states that, 'wherever a choice has to be made between the family of adoption and the family of origin, the family of adoption shall prevail."

C. Rights and Obligations as to Support and Care

Adoptive parents are duty-bound to support and care for the adopted child. Since the adopted child has an equal right as a naturally born child, it is also incorporated in both the FDRE Constitution and UN Convention on the Rights of the Child that the child is entitled to acquire care of his/her guardian. Hence, the mother and father are during their marriage jointly guardians and tutors of their minor children.

In return for support and care, a child who is capable, has reciprocal duty to give maintenance to his adoptive parents. As expressly put under Art. 198 of the RFC an obligation to supply and maintenance exists between relatives by consanguinity or affinity in the direct line and between brothers and sisters. However, the adopted child, his spouse and his descendants may not claim maintenance from the family of origin of the adopted child unless the adoptive family isn't in a position to supply such maintenance.

8.5 Inter-country Adoptions and Safeguards to Children

8.5.1 Inter-country Adoption in General

The term inter-country adoption refers to an adoption in which adopters and child don't have the same nationality, as well as one in which the habitual residence of adopters and child is in different countries. Nowadays in Ethiopia, there are two kinds of inter-country cases. The first one is the biological mother voluntarily relinquishes her children for personal reasons. It may also by both parents and guardians for reasons such as lack of means to support. We call these private inter-country adoptions. They are arranged directly between the biological parents and adoptive parents or their representatives or through an intermediary. The other is adoption of orphaned or abandoned children or children whose parents are ill and hence have no one else to act on their behalf. These are called agency inter-country adoptions for the reason that it

is the agency which acts on behalf of the child in case of adoption.

In general, adoptions shall be granted only if it will be in the best interests of the child.
And that the authority approving the adoption is to carry out a thorough inquiry relating to the parties through the agency or the appropriate authorities, and as for as possible with the help of experienced social workers and agencies qualified in the field of inter-country adoptions. The making of the appropriate investigations preliminary to an adoption, is therefore, left to the initiative of the forum state rather than to an internationally uniform procedure, and this is each country's courts are to apply forum law to all procedural matters. Hence, it is with this in view that we will discuss some of the procedural matters such as selection of prospective adoptive parents, court proceeding etc., in relation to the two types of inter-country adoptions.

8.5.2 Placement of the Child

……

8.5.3 Selection of Adoptive Parents

In the total evaluation of the interest of the child, the examination of the personal qualities of the adopter is of special significance. Each country has its own laws and procedures regarding the selection and approval of prospective adoptive parents.
In general, it is necessary to arrive at a firm conclusion that the future adoptive parents will be able to bring up the child properly and maintain him financially. Beyond that parents have responsibility to teach their children, respect and to provide with a conducive environment in which he may develop sound character. This responsibility imposes on a parent an obligation to train his child in differentiating "right" from "wrong" and develop his child's conscience. It also requires a parent to teach by example, that is, to conduct himself in a manner that his child may imitate.

8.6 Safeguards for Children in Inter-country Adoption

8.6.1 Follow-up Work

As regards inter-country adoptions, the Convention on the Rights of the Child calls for the guarantee of being informed of the child's condition after authorization of adoption and his departure abroad. This enables the concerned authorities to ensure that the child's rights are respected and that the child is faring well. To this end, the competent authorities should follow-up the adopted and expatriated children.

8.6.2 The Child's Right to Identity and Secrecy

In the adoption process three interests are involved i.e. the interest of the child, the parents i.e. both adoptive and natural, and public interest. The child has an interest to know his identity. On the contrary, security is a guarantee based in part of a desire to protect the parent from public embarrassment.

8.7. Revocation of Adoption

Although adoptive filiation is established by the agreement of the adopter and the adoptee, it cannot produce any legal effect unless it is approved by the court. The court, before giving the decision of approval, conducts serious investigations and inquires to make sure that the agreement of adoption is in the best interest of the child in all respects.

If an adoption is approved by the court, as a matter of rule, if is not revocable as clearly provided in Art. 195(1) of the RFC. However, unlike Art. 806 of the Civil Code which provided for the irrevocability of adoption for whatever reason, Art. 195(2) of the RFC states that adoption may be revoked for the reasons mentioned there under. According to this sub article, adoption may be revoked by the court where the adopter, instead of looking after the adopted child, handles him as a slave, or in conditions resembling slavery, or makes him engage in immoral acts for his gain, or handles him in any other manner that is detrimental to his future.

The petition for revocation of adoption may be made by the child, a government organ authorized to follow up the well-being of children or any other interested person (Art. 196(1)).When petition is submitted to the court the court shall determine whether the grounds for petition are real and sufficient to warrant revocation. If the court is satisfied that the petition is well founded, then it revokes the adoption.

8.8. Summary

Normally, it is natural filiation which creates parent child relationship. However, artificial filiation is established by agreement to be entered between the parties concerned. Such mode of establishment of familial relationship is called adoption which is entirely dependant upon the agreement of the adoptee (the child) and the adopter.

In order to establish a valid adoption, essential conditions of adoption provided by law must be satisfied. Once a valid adoption is established, it is only on few grounds that adoption is revoked. Even then, adoption is only to be revoked by the order of the court when it is satisfied that the continuance of

adoption does not advance the best interest of the child.

A validly formed adoption produces certain legal effects. The first is, adoption becomes an impediment to marriage; secondly, it creates the obligation to supply maintenance and rights and duties of support and care between the adopter and the adoptee.

Adoption could be in country or inter country. In the case of inter- country adoption, we have to take care that the rights of children are respected and protected in accordance with the requirements of Ethiopian laws and international human right instrument to which Ethiopia is a party.

CHAPTER NINE

OBLIGATION TO SUPPLY MAINTENANCE

9.2. Objectives

• define the subject matter of obligation to supply maintenance;

• identify persons entitled to maintenance and persons obliged to supply maintenance;

• discuss the rationale behind such obligation;

• state the reasons leading to extinction of the obligation;

9.3. Rationale behind the Obligation

What is the rationale behind such obligation? They rationale behind such obligation is a moral duty that exists among family members. When a member of a family becomes needy, no one is nearer than the family members to maintain such member.

9.4. Subject Matter of the Obligation

According to Art.197 of the RFC, the person who is obliged to supply maintenance is bound to supply to his creditor things that are necessary for the livelihood of the creditor.

This means that the debtor is not bound to supply to the creditor things that would facilitate luxurious life. The things that are necessary for the well-being of the creditor must be given to him based on the social conditions and local custom of the area in which the creditor lives. That is, the creditor who lives in the countryside may not claim to be given expensive clothes that are worn by fashion-conscious young people of big cities.

Generally, things that are necessary for the livelihood of the creditor are; the means to feed, lodge, and clothe, to care for his health and education, depending on conditions of the creditor. Therefore, maintenance comprises everything indispensable for

sustenance, dwelling, clothing, medical attendance, education and transportation depending up on the financial capacity of the debtor. The education of the person entitled to be supported may include his schooling or training for some profession, trade or vocation.

9.5. Persons between Whom the Obligation Exists

As provided in Art. 198 of the RFC, a person may be obliged to supply maintenance to his spouse, ascendants, and descendants, his brothers and sisters.

As provided in Art. 198 of the RFC, a person may be obliged to supply maintenance to his spouse, ascendants, and descendants, his brothers and sisters. Although it is not expressly provided in this article, a person is obliged to supply maintenance to his/her adoptee or adopter as the case may be. This is because Art.181 of the RFC clearly provides that (without prejudice to Art.182 of the same code) an adopted child for all purposes, be deemed to be the child of the adopter. If an adopted child is for all purposes considered as the child of the adopter, it means that the adopter will be obliged to supply maintenance to the adoptee and the adoptee will be obliged to discharge such obligation since such obligation exists between a child and his ascendants and between a parent and his descendants.

9.6. Termination of the Obligation

In our previous discussions, we have said that the obligation to supply maintenance is a legal obligation. As such, it creates a debtor creditor relationship. The one who is obliged to supply maintenance is the debtor while the one who entitled to receive maintenance is a creditor. The source of such relationship is the law. Despite this legal bond, the debtor creditor relationship cannot exist in perpetuity. It terminates on certain grounds.

A) Agreement of the parties:- The debtor and the creditor may agree to terminate such relationship without affecting the mandatory provisions of the law. This is because under Art. 1975 of the Ethiopian Civil Code a contract is defined as an agreement whereby two or more persons as between themselves create, vary, or extinguish obligations of proprietary nature.

B) The ability of the creditor to earn his/her livelihood:- previously, we have said that one is entitled to claim maintenance allowance when one is not able to earn his/her livelihood by his her/own effort due to some reasons. But when it is possible to show that the creditor is in a position to earn

his livelihood or has acquired enough means to sustain his/her life, there is no reason that makes the obligation continue.

C) Inability of the debtor to discharge the obligation:- the relationship that exists between the debtor and the creditor does not suffice to entitle the creditor for maintenance allowance. Rather the debtor must be able to provide maintenance. Hence, although debtor-creditor relationship has been established between the parties, such relationship terminates when the debtor is unable to discharge his obligation for various reasons.

D) Condemnation of creditor (Art. 200 RFC):- The creditor loses his right of maintenance where the commits or attempts to commit a criminal act against the debtor.

The creditor may also lose his right of maintenance where he has committed or attempted to commit a criminal act on the life or property of the ascendants or descendants of the debtor. The same is true or such crimes are committed or attempted on the life or property of the spouse of the debtor.

9.7. Summary

One of the conspicuous effects of familial relationship is that an obligation to supply maintenance allowance among such persons is created within the bounds of the law. One is obliged to supply maintenance only to those persons whom the law has identified. The obligation to supply maintenance establishes a debtor creditor relationship provided that the debtor is not able to maintain himself and the creditor is able to provide such maintenance allowance.

Generally, such obligation exists between ascendants and descendants, adopter and adoptee, spouses, and sisters and brothers. Such obligation is a moral duty existing between such persons. As to the subject matter of maintenance allowance, the law provides that the debtor is duty bound to supply to the creditor things that are necessary for the livelihood of the creditor.

The obligation to supply maintenance allowance is not an everlasting obligation. It may be terminated on a number of grounds. The grounds of termination are generally waive of the right by the creditor, the ability of the creditor to earn his livelihood, inability of the debtor to supply maintenance and condemnation of the creditor.

CHAPTER TEN

SETTLEMENT OFDISPUTES

10.1. Introduction

It is obvious that misunderstandings and disputes arise between spouses or partners in an irregular union. The disputes may be attributable to a number of factors. However, the main thing is resolving such disputes using various dispute settlement mechanisms. These mechanisms are generally divided into two: settlement of disputes by courts and settlement of disputes by out-of-court mechanisms which are collectively called ADR (Alternative Dispute Resolution) mechanisms.

The RFC and Regional Family Codes have incorporated these dispute resolution methods.

10.3. Settlement of Disputes Arising out of Marriage and Irregular Union

10.3.1. Preliminaries

In Ethiopian family laws, a solution is sought for disagreements between spouses or partners to an irregular union either by adjudication or by using arbitration. The law has put in place both the substantive and procedural provisions in order to help the disputants resolve their problems by regular courts or arbitration. These are clearly incorporated under the RFC and Regional Family Laws. It is these two important dispute settlement mechanisms that will be discussed under this chapter of the course material.

10.3.2. Settlement of Disputes by Court

Although Art. 118 of the RFC provides that any dispute arising out of marriage or irregular union is to be decided except for deciding divorce, by arbitrators chosen by the spouses, if reconciliation becomes difficult to arbitrators or if one of the parties or both of them feel that the way the arbitrators handle the arbitration process is wrong then they may appeal to a court having jurisdiction. After the appeal is made to the court, the court will analyze the petition and may approve, amend or reverse the decision of arbitrators and the decision of the court shall be final.