2018 TERM 1 SOUTHERN NYANZA PROVINCE COUNTIES' MATHEMATICS CONTESTS

P. O. Box 578, RONGO- 40404. Tel. +254724214892 / +254733545455.

AT KANYAWANGA HIGH SCHOOL: February 18, 2018.

FORM 3 CONTEST: Time: 2 hours

STUDENT'S SCORE

Your names: _____

Your School's Contest Code / RECEIPT No: _____

(DO NOT WRITE THE NAME OF YOUR SCHOOL ON ANY PART OF THIS PAPER)

1. Evaluate $\sqrt[4]{\left(\frac{3.45+2.62}{786\times 0.0007}\right)} = \sqrt[4]{\frac{6.07}{786\times 0.0007}}$ (4 marks)

No	Std form	Logarithms
6.07	6.07×10^{0}	0.7832
786	7.86×10^{2}	2.8954 +
0.0007	7.0×10^{-4}	$\bar{4}.8451$ +
		$\bar{1}.7405$ −
		$1.0427\times\frac{1}{4}$
		0.2607
1.823	1.823×10^{0}	

(M1) for all logs correct
(M1) for + and − of logs.
(M1) for ÷ 4
(A1) for correct answer only.

2. A solid right pyramid has a square base of sides 12 cm and a slant height of 20 cm. Calculate, correct to 2 decimal places, its total surface area. (4 marks)

Height of one slant face

$h^2 = 20^2 - 6^2 = 364$

$h = \sqrt{364}$ (M1)

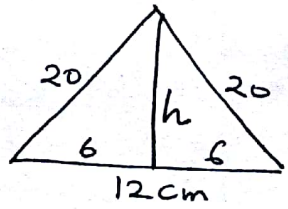

Area of 4 faces $= 4\left(\frac{1}{2}\times12\times\sqrt{364}\right)$

or $= 4\left[\sqrt{26\times14\times6\times6}\right]$ (M1)

$= 457.89\ cm^2$ (M1)

Base area $= 12\times12 = 144\ cm^2$

Total Surface area $= 144 + 457.89$

$= 601.89\ cm^2$ (A1)

Scanned by CamScanner

3. If $\mathbf{a} = \begin{pmatrix} 2 \\ 3 \end{pmatrix}$ and $\mathbf{b} = \begin{pmatrix} 4 \\ 5 \end{pmatrix}$, find: $3\mathbf{a} - 5\mathbf{b}$ (2 marks)

$= 3\begin{pmatrix} 2 \\ 3 \end{pmatrix} - 5\begin{pmatrix} 4 \\ 5 \end{pmatrix}$ M1

$= \begin{pmatrix} 6 \\ 9 \end{pmatrix} - \begin{pmatrix} 20 \\ 25 \end{pmatrix}$

$= \begin{pmatrix} -14 \\ -16 \end{pmatrix}$ A1

4. Solve the following inequality and represent the solution on a number line $3x + 17 < 5$ (2 marks)

$3x < -12$

$x < -4$ B1

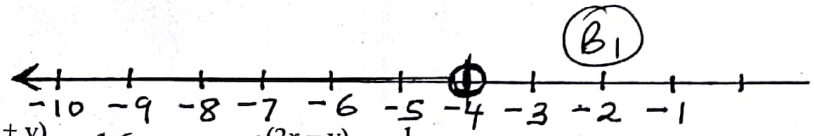

5. If: $2^{(x+y)} = 16$ and $4^{(2x-y)} = \frac{1}{4}$, Find the value of x and y (4 marks)

$2^{x+y} = 2^4 \Rightarrow x + y = 4$ M1

$4^{2x-y} = 4^{-1} \Rightarrow 2x - y = -1$ M1

$x + y = 4$

$2x - y = -1$ + M1

$3x = 3$

$x = 1$

$y = 3$ A1

7. The sum of the interior angles of two regular polygons of sides n−1 and n are in the ratio 2:3.

Calculate:

(a) the value n.

$\frac{90[2(n-1)-4]}{90(2n-4)} = \frac{2}{3}$ M1 (2 marks)

$\frac{2n-6}{2n-4} = \frac{2}{3} \Rightarrow 6n - 18 = 4n - 8$

$2n = 10$

$n = 5$ A1

(b) the interior angle of each polygon. (2 marks)

(i) $e = \frac{360}{n} = \frac{360}{5} = 72°$

$i = 180° - 72°$

$= 108°$ B1

(ii) $e = \frac{360}{4} = 90$

$i = 180 - 90$

$= 90°$ B1

Scanned by CamScanner

7. The data below is a record of the time in seconds taken in a 100m-race by 30 athletes:

10.5 11.4 11.3 12.6 12.8 10.8 10.4 11.1 12.3 12.5 10.9 10.6 11.6 11.5 11.6
11.6 11.9 11.6 10.7 11.0 11.2 12.2 11.5 11.8 13.2 11.2 11.8 12.7 11.0 11.3

(a) Group the data using a class interval of 0.4 starting from 10.4 – 10.7 (2 marks)

Class	Tall marks	Frequency f	Mid-points x	fx
10.4-10.7	////	4	10·55	42·20
10.8-11.1	~~////~~	5	10·95	54·75
11.2-11.5	~~////~~ //	7	11·35	79·45
11.6-11.9	~~////~~ //	7	11·75	82·25
12.0-12.3	//	2	12·15	24·30
12.4-12.7	///	3	12·55	37·65
12.8-13.1	/	1	12·95	12·95
13.2-13.5	/	1	13·35	13·35
		Σfx = 30		Σfx = 346.9

B1 for classes B1 for frequencies.

(b) Find the mean time taken for the race $= \frac{\Sigma fx}{\Sigma f} = \frac{346.9}{30}$ M1
$= 11.56$ A1 (2 marks)

(c) Calculate the median of the data $= 11.15 + \left(\frac{15-9}{7}\right) \times 0.4$ M1 (2 marks)
$= 11.15 + 0.3429$
$= 11.49$ A1

8. Find the vertices of a triangle defined by the intersection of the lines. (6 marks)

$y = x$, $\frac{y-1}{x-5} = -3$ and $3y - 6 = 2 - x$.

(i) $y - x = 0$
$y + 3x = 16$ –
$-4x = -16$ M1
$x = 4$
$y = 4$
Vertex $(4, 4)$ A1

(ii) $3y + x = 8$
$y - x = 0$ +
$4y = 8$ M1
$y = 2$
$x = 2$
Vertex $(2, 2)$ A1

(iii) $y - 1 = -3(x - 5)$
$y - 1 = -3x + 15$
$y + 3x = 16$ x1
$3y + x = 8$ x3
$y + 3x = 16$ M1
$9y + 3x = 24$ –
$-8y = -8$
$y = 1$
$x = 5$
Vertex $(5, 1)$ A1

Scanned by CamScanner

9. The figure below shows a cone with the vertex at A and the diameter BC. The cone is cut off along DE: Find the:

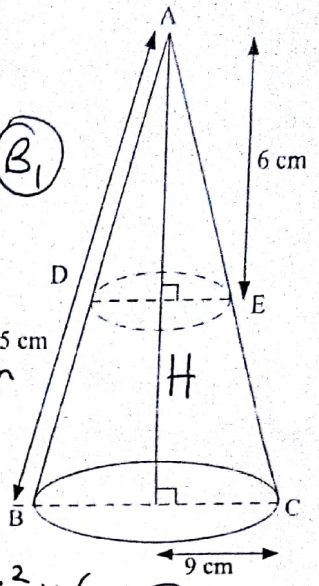

(a) height of the bigger cone. (1 mark)

$H^2 = 15^2 - 9^2$

$H^2 = 144$

$H = 12$ cm (B_1)

(b) base radius of the smaller cone. (2 marks)

$\frac{12}{6} = \frac{9}{r}$ (M_1) (A_1)

$12r = 6 \times 9 \Rightarrow r = 4.5$ cm

(c) volume of the frustum to the nearest whole number (3 marks)

Volume of big cone $= \frac{1}{3} \times \frac{22}{7} \times 9^2 \times 12$

$= 1018.29$ cm^3 (M_1)

Volume of small cone $= \frac{1}{3} \times \frac{22}{7} \times 4.5^2 \times 6$ (M_1)

$= 127.29$ cm^3

Volume of frustum $= 1018.29 - 127.29 = 891$ cm^3 (A_1)

10. Solve the equation $(p+1)^2 + 3p - 1 = 0$ (3 marks)

$p^2 + 2p + 1 + 3p - 1 = 0$ (M_1)

$p^2 + 5p = 0$

$p(p+5) = 0$ (M_1)

$p = 0$ or -5 (A_1)

11. Use reciprocal and cube root tables to evaluate correct to 4 significant figures

$\frac{5}{63.34} - \sqrt[3]{0.0169}$ (3 marks)

(i) $5(63.34)^{-1}$

$= 5(0.01579)$

$= 0.07895$ (M_1)

(ii) $\sqrt[3]{\frac{16.9}{1000}}$

$= 2.566 \times \frac{1}{10}$

$= 0.2566$ (M_1)

Difference $= 0.07895 - 0.2566$

$= -0.1777$ (A_1)

Scanned by CamScanner

12. The figure below shows an arc ACE of a circle of radius 6 cm. If BC = CD = 4 cm.

Calculate: (a) the length of AB correct to 3 decimal places. (2 marks)

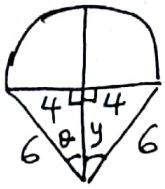

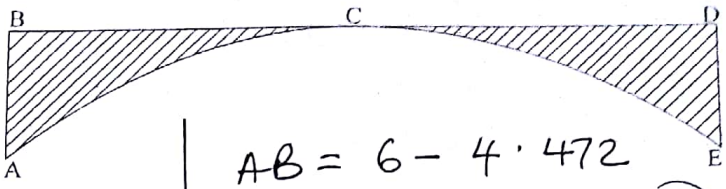

$y^2 + 4^2 = 6^2$

$y^2 = 36 - 16 = 20$ (M1)

$y = \sqrt{20} = 4.472$

$AB = 6 - 4.472$

$= 1.528$ cm (A1)

(b) the area of the segment ACE correct to 2 decimal places. (3 marks)

$\sin\theta = \frac{4}{6} = 0.6667$

$\theta = 41.81°$

$2\theta = 83.62°$

Area of sector − Area of triangle

$= \frac{83.62}{360} \times \frac{22}{7} \times 6^2 - \frac{1}{2} \times 8 \times \sqrt{20}$ (M1)

$= 26.28 - 17.89 = 8.39\ cm^2$ (A1)

(c) the area of the shaded region correct to 1 decimal place. (2 marks)

$= (1.528 \times 8) - 8.39 = 12.224 - 8.39$ (M1)

$= 8.8\ cm^2$ (A1)

13. (a) From the figure below state which of the figures P_1, P_2, P_3 and P_4 are :

(i) Directly congruent (2 marks)

P1 and P3 (B1)

P2 and P4 (B1)

(ii) Indirectly congruent (2 marks)

P1 and P2
P2 and P3 } (B1)

P3 and P4
P4 and P1 } (B1)

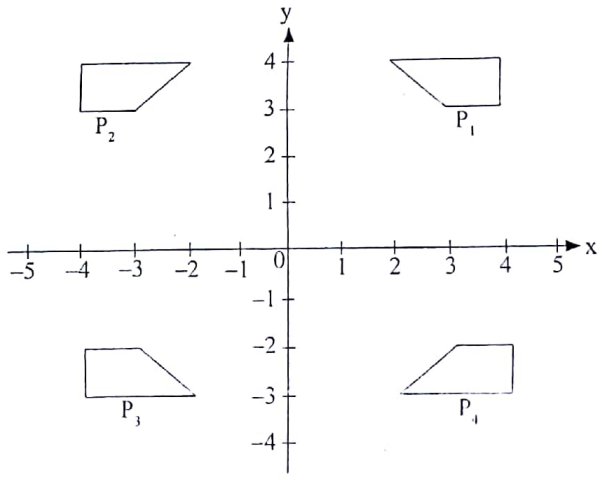

(b) State the order of rotational symmetry of the following plane figures: (2 marks)

(i)

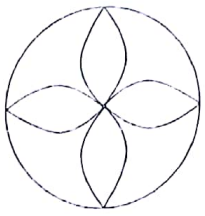

4 (B1)

(ii)

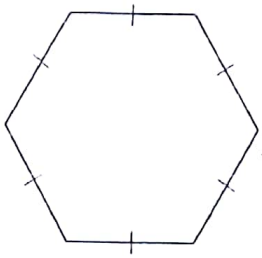

6 (B1)

Scanned by CamScanner

14. In the figure below, O is the centre of the circle. BOD is the diameter. AC = BC and ∠BAC = 25°. Find the size following acute angles.

(a) ∠AOD $= 180 - 100$ (M1)
$= 80°$ (A1) (2 marks)

(b) ∠CAO $= 40 + 25$ (M1)
$= 65°$ (A1) (2 marks)

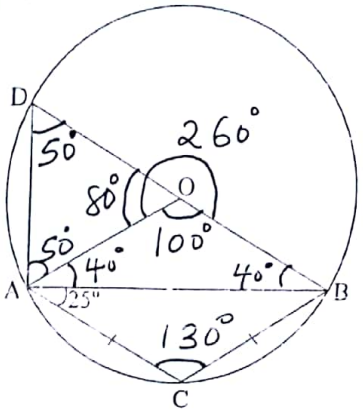

15. A triangle with vertices at P(2, 3), Q(-3, 3) and R(0, 5) is first rotated about (0,0) through +90°, followed by a reflection in the line y = x. If it is finally translated through vector ( ) use the grid provided below to find the co-ordinates of the vertices of the final image. (6 marks

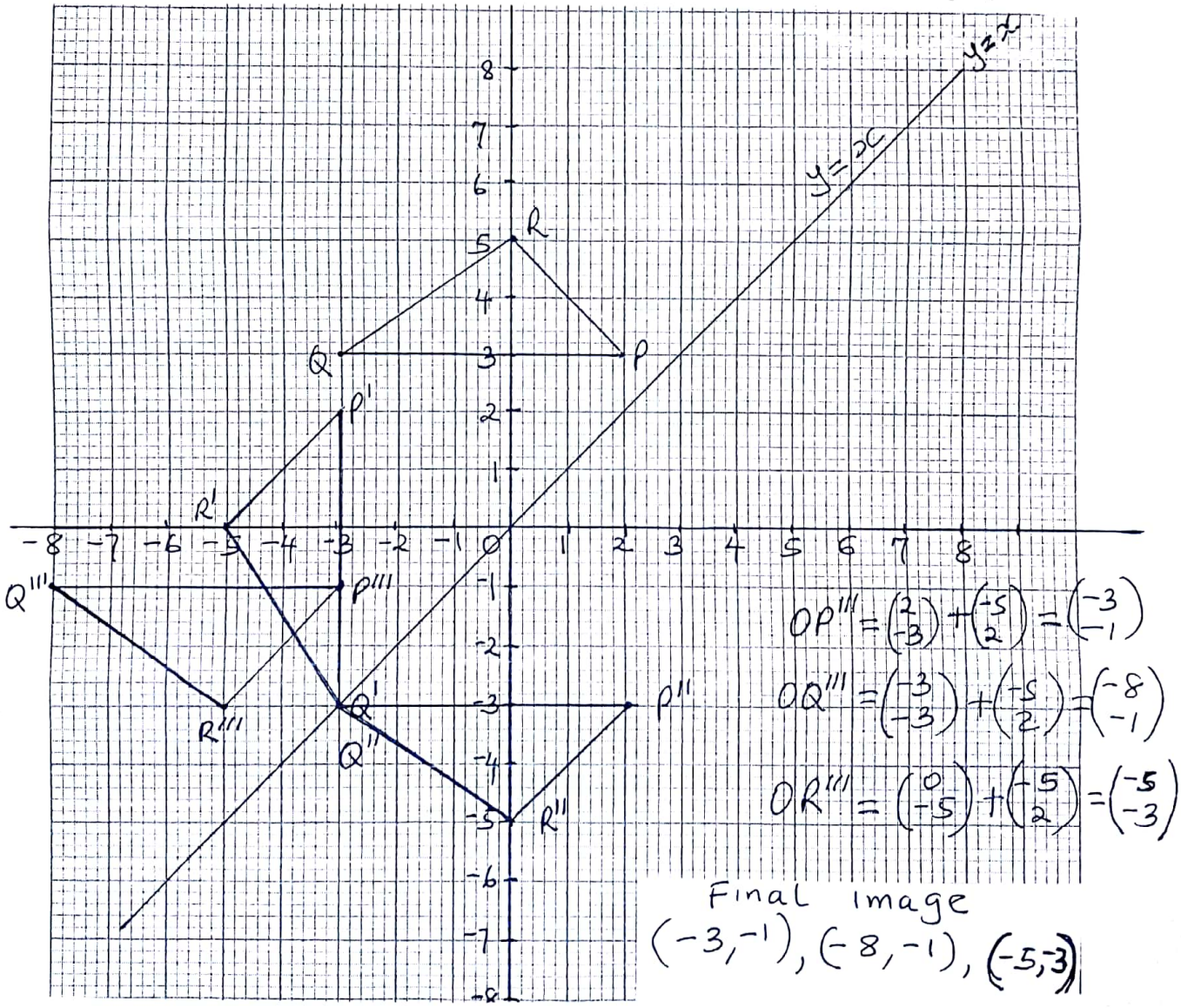

Scanned by CamScanner

16. (a) Determine the equation of a straight line with gradient $\frac{4}{3}$ and y-intercept -2 in the form $ax + by + c = 0$ when a, b, and c are integers. (2 marks)

The line passes through $(0, -2), (x, y)$

$$\frac{y - -2}{x - 0} = \frac{4}{3} \quad (M1)$$

$$\frac{y+2}{x} = \frac{4}{3}$$

$$3y + 6 = 4x$$

$$-4x + 3y + 6 = 0 \quad (A1)$$

(b) The gradient of a straight line L_1 passing through the points P(3, 4) and Q(a, b) is $-\frac{3}{2}$. A line L_2 is perpendicular to L_1 and passes through the point Q and R(2, –1). Determine the values of of a and b. (3 marks)

Equation of line L_1:

It passes through $(3, 4), (x, y)$

$$\frac{y-4}{x-3} = \frac{-3}{2}$$

$$2y - 8 = -3x + 9 \quad (M1)$$

$$2y + 3x = 17$$

When $x = a$ and $y = b$

$$3a + 2b = 17 \quad \ldots\ldots (i)$$

Equation of line L_2:

It passes through $(2, -1), (x, y)$

$$\frac{y - -1}{x - 2} = \frac{2}{3}$$

$$\frac{y+1}{x-2} = \frac{2}{3} \quad (M1)$$

$$3y + 3 = 2x - 4$$

$$3y - 2x = -7$$

$$-2x + 3y = -7$$

When $x = a$ and $y = b$

$$-2a + 3b = -7 \quad \ldots\ldots (ii)$$

Solving equation (i) and (ii)

$$3a + 2b = 17 \quad \times 2$$

$$-2a + 3b = -7 \quad \times 3$$

$$6a + 4b = 34$$

$$-6a + 9b = -21 \quad +$$

$$13b = 13$$

$$b = 1$$

$$a = 5 \quad (A1)$$

17. Find the area of the parallelogram below given that PR =7.8 cm and QS = 5 cm. (2 marks)

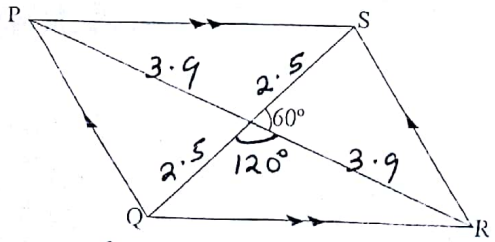

$$= 2\left(\frac{1}{2} \times 3.9 \times 2.5 \sin 60\right) + 2\left(\frac{1}{2} \times 2.5 \times 3.9 \sin 120\right) \quad (M1)$$

$$= 8.44 + 8.44$$

$$= 16.89 \text{ cm}^2. \quad (A1)$$

Scanned by CamScanner

18. Evaluate: $5\frac{1}{2} - 1\frac{1}{7}\left(1\frac{1}{5}+\frac{9}{10}\right)+\frac{1}{3}\text{ of }\left(\frac{2}{3}\div\frac{5}{6}\right)$ (3 marks)

$5\frac{1}{2}-1\frac{1}{7}\left(\frac{6}{5}+\frac{9}{10}\right)+\frac{1}{3}of\left(\frac{2}{3}\times\frac{6}{5}\right)$

$5\frac{1}{2}-1\frac{1}{7}\left(\frac{12+9}{10}\right)+\frac{1}{3}of\left(\frac{4}{5}\right)$

$5\frac{1}{2}-\frac{8}{7}\left(\frac{21}{10}\right)+\frac{4}{15}$

$\frac{11}{2}-\frac{12}{5}+\frac{4}{15}=\frac{165-72+8}{30}$

$=\frac{173-12}{30}$

$=\frac{101}{30}$

$=3\frac{11}{30}$

(M1) for removal of brackets

(M1) for workings

(A1) for answer expressed as a mixed number.

19. Simplify by use of common factors $\frac{4xy-3x+8y^2-6y}{x+2y}$ (2 marks)

Factorising Numerator

$x(4y-3)+2y(4y-3)$

$(x+2y)(4y-3)$ (M1)

$\frac{N}{D}=\frac{(x+2y)(4y-3)}{(x+2y)}$

$=4y-3$ (A1)

20. (a) Write in figures (symbols): Thirty eight million, seven hundred and thirty nine thousand, six-hundred and nineteen, hence round it off to the nearest ten thousand. (2 marks)

38 739 619 (B1) (in symbols)

38 740 000 (B1) (to the nearest 10 000).

(b) What is the place value and the total value of the digit 4 underlined below.

74 379 652 137

(i) Place value: Billions (B1) Do not give marks for Billion without s (1 mark)

(ii) Total value: $4 \times 1\,000\,000\,000 = 4\,000\,000\,000$ (B1) (1 mark)

Scanned by CamScanner

21. You are given a composite number 4 356.

(a) Express it as a product of prime factors . (2 marks)

$4356 = 2 \times 2 \times 3 \times 3 \times 11 \times 11$

$= 2^2 \times 3^2 \times 11^2$ (M1) (A1)

(b) Use the product of prime factors to find its square root (2 marks)

$\sqrt{4356} = \sqrt{2^2 \times 3^2 \times 11^2}$

$= 2 \times 3 \times 11$ (M1)

$= 66$ (A1)

23. B is 102 km on a bearing of 112° from A. C is 94 km on a bearing of 062° from B. D is 073° from A and 336° from C. Using a scale of 1cm to represent 20 km; determine:

(a) the positions of A, B, C and D (3 marks)

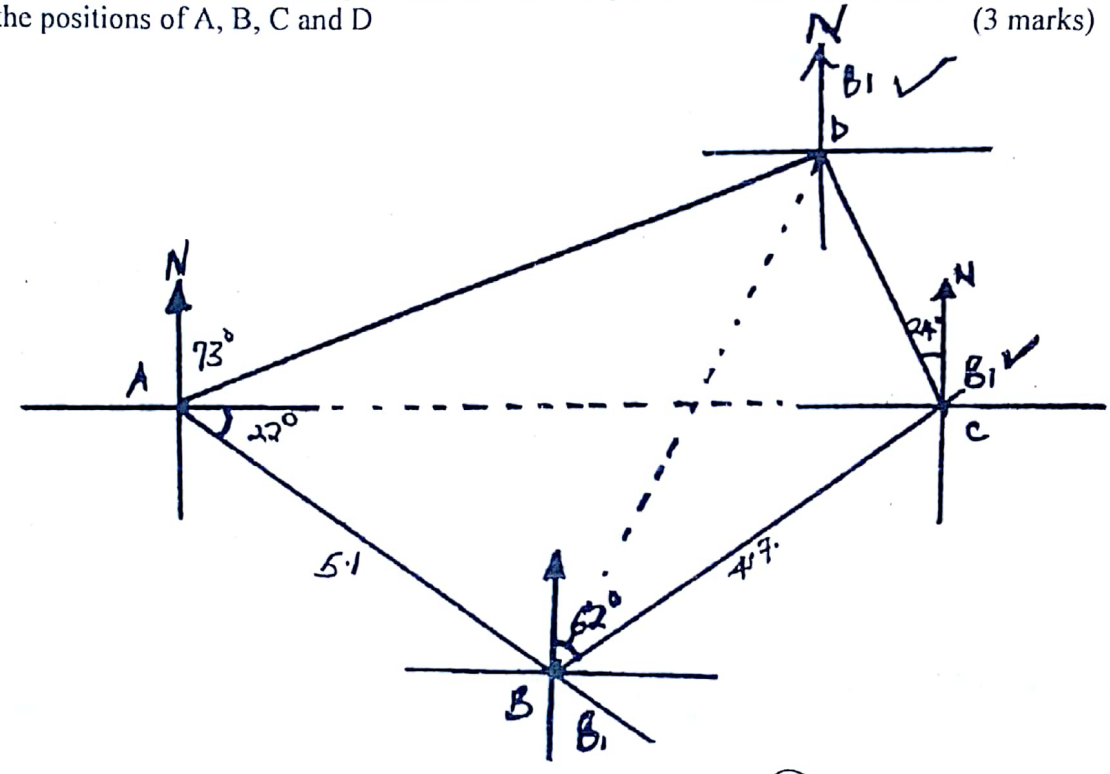

(b) the bearing of B from D $= 216° \pm 1°$ (B1) (1 mark)

(c) the distance AC $= 9 \times 20 = 180$ Km $\pm$ 2 Km. (1 mark) (B1)

Scanned by CamScanner

24. Using a ruler and a pair of compasses only, construct triangle LMN such that LM = 7.3 cm. MN = 4.9 cm and angle LMN=75°. Measure LN (5 marks)

Drawing LM = 7·3 cm and MN = 4·9 cm } B1
Constructing 90° B1
Constructing 60° B1
Bisecting 30° to get 15° and △ LMN B1
LN = (7·6 ± 0·1) cm B1

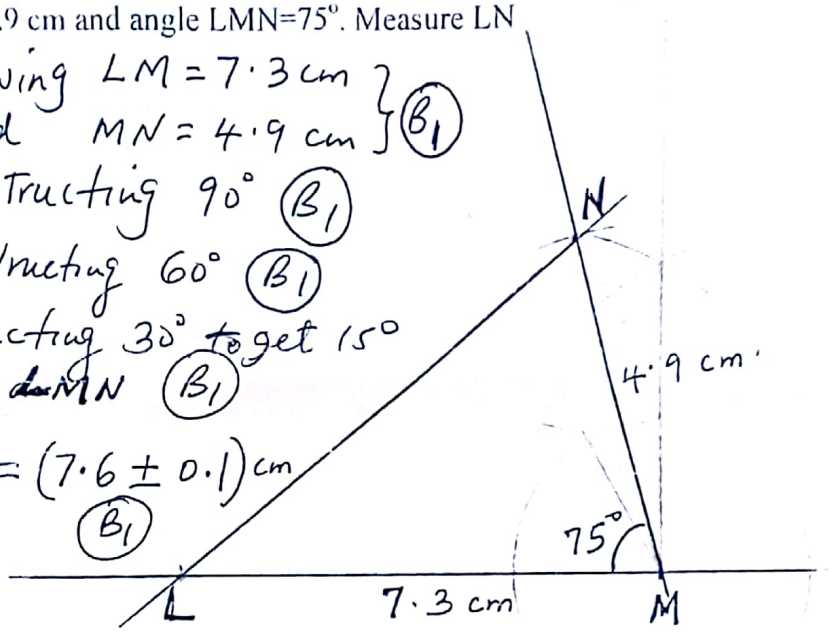

22. Musa spent Ksh 390 to buy seven exercise books and four pens while Alice spent Ksh 300 to buy five exercise books and five pens of the same type. Find the cost of each item. (3 marks)

$7e + 4p = 390 \times 5$
$5e + 5p = 300 \times 4$ M1

$35e + 20p = 1950$
$-\ 20e + 20p = 1200$ M1
$15e = 750$
$e = 50$
$p = 10$ A1

25. The distance between two Towns A and B is 418 km. At 9:45am, a truck left town A and travelled toward town B. At the same time a car left town B and travelled towards town A along the same road. Given that the car's speed is 30 km/h faster than the truck's and that the two vehicles met at 1:33pm. Find the speed of each vehicle. (4 marks)

Let the truck's speed be x Km/h
The car's speed $= (x+30)$ Km/h
Time taken to meet = 13·33 − 9·45
= 3hrs 48 min

time taken $= \frac{\text{distance}}{\text{Relative speed}}$

$3\frac{48}{60} = \frac{418}{2x+30} = 3\frac{4}{5}$ M1

$\frac{418}{2x+30} = \frac{19}{5}$

$19(2x+30) = 5 \times 418$
$2x + 30 = 110$ M1
$2x = 80$
$x = 40$ A1

Truck's speed = 40 Km/h
Car's speed = 70 Km/h · B1

Scanned by CamScanner