BRILLIANT STUDENTS FORM 3 END TERM 3 SERIES 3 EXAMS *(ALL SUBJECTS TESTED)*



BRILLIANT STUDENTS FORM 3 END TERM 3 SERIES 3 EXAMS

Prefer Calling Amobi Group of Examiners @

0743 333 000 OR 0706 851 439

For Marking Schemes

***N/B** In Response to the Huge Costs Associated in Coming Up with Such/Similar Resources Regularly, We inform us All, MARKING SCHEMES ARE NOT FREE OF CHARGE. However Similar QUESTIONS, Inform of soft Copies, are Absolutely FREE to Anybody/Everybody. Hence NOT FOR SALE*

by Amobi Group of Examiners.

ORDER OF THE 13 SUBJECTS TESTED

(ALPHABETICALLY ARRANGED)

1. **AGRICULTURE**
2. **BIOLOGY**
3. **BUSINESS STUDIES**
4. **CHEMISTRY**
5. **COMPUTER**
6. **C.R.E**
7. **ENGLISH**
8. **GEOGRAPHY**
9. **HISTORY**
10. **HOMESCIENCE**
11. **KISWAHILI**
12. **MATHS**
13. **PHYSCIS**

Prefer Calling Amobi Group of Examiners @ 0743 333 000 or 0706 851 439 for Marking Schemes

CALL AMOBI GROUP OF EXAMINERS @ 0743 333 000 OR 0706 851 439 TO ACQUIRE :









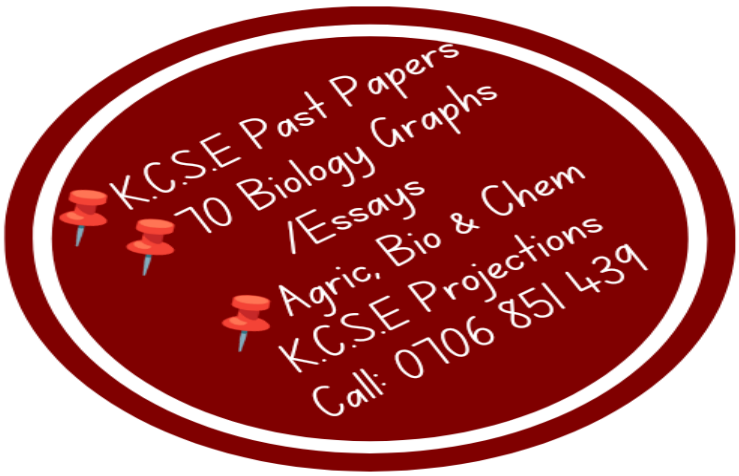



BRILLIANT STUDENTS

FORM 3 END TERM 3 SERIES 3 EXAMS

NAME: ……

SCHOOL: ……

ADM NO: …… **SIGN:** …… **DATE:** ……

443/1

AGRICULTURE

(THEORY)

TIME: 2 HOURS

FORM THREE

INSTRUCTION TO CANDIDATES

a) Write your name and index number in the spaces provided above.

b) Sign and write the date of examination in the spaces provide above.

*c) Answer **all** the questions in sections **A** and **B.***

d) All answers should be written in the spaces provided.

FOR EXAMINER'S USE ONLY

SECTION	QUESTION	MAXIMUM SCORE	CANDIDATE'S SCORE
A	1 – 16	30	
B	17 - 19	20	
C	20 - 22	40	
TOTAL SCORE			

Prefer Calling Amobi Group of Examiners @ 0743 333 000 or 0706 851 439 for Marking Schemes

SECTION A (30 MARKS)

Answer all the questions in this section in the spaces provide.

1.Name **two** sources of soil nutrients **(1mark)**

……

……

……

……

2.State **two** roles of soil water **(1mark)**

……

……

……

……

3.Give **two** advantages of compound fertilizer. **(1mark)**

……

……

……

……

4.State **four** effects of high temperature on crop production. **(2marks)**

……

……

……

……

……

……

5.Outline **four** ways of improving the structure of sandy soils. **(2marks)**

……

……

……

……

……

Prefer Calling Amobi Group of Examiners @ 0743 333 000 or 0706 851 439 for Marking Schemes

……

……

6.State **two** reasons for rolling when planting wheat crop. **(2marks)**

……

……

……

……

7.List down **four** pieces of information found in a land title deed **(2 marks)**

……

……

……

……

……

……

8.Name **two** types of vegetables **(1 mark)**

……

……

……

……

9.List down the **two** agents of soil erosion **(1 marks)**

……

……

……

……

10. Outline **four** factors influencing soil erosion **(2 marks)**

……

……

……

……

……

……

Prefer Calling Amobi Group of Examiners @ 0743 333 000 or 0706 851 439 for Marking Schemes

11. State **four** methods of water harvesting in the farm. **(2 marks)**

……

……

……

……

……

……

12. Give **four** factors that are considered when selecting a nursery site. **(2 marks)**

……

……

……

……

……

……

13. Distinguish between intercropping and Monocroping. **(2 marks)**

……

……

……

……

14. Give **three** ways in which consolidation helps to improve farm management**.** **(3 marks)**

……

……

……

……

……

15. Name **three** ways in which weeds are classified based on growth cycle. **(3marks)**

……

……

……

……

……

Prefer Calling Amobi Group of Examiners @ 0743 333 000 or 0706 851 439 for Marking Schemes

16. What the functions of the following parts of a knapsack sprayer? **(3marks)**

ii) Nozzle

……

……

iii) Trigger

……

……

iiii) Pneumatic lever

……

……

SECTION B (30 MARKS)

Answer all the questions in this section in the spaces provided.

17. The diagram below shows a common weed. Study it and answer the questions that follow.



a) Identify the weed. **(1 mark)**

……

……

b) Give **one** reason why it is difficult to control the weed. **(1 mark)**

……

……

……

c) State **two** reasons for controlling the weed in a crop field. **(2marks)**

……

……

……

Prefer Calling Amobi Group of Examiners @ 0743 333 000 or 0706 851 439 for Marking Schemes

……

……

(c) At what stage of growth should the weed be controlled using a post emergence herbicide? Give a reason for your answer. **(2marks)**

……

……

……

……

18. The diagram below shows a method of soil conservation, study then answers the questions that follow.

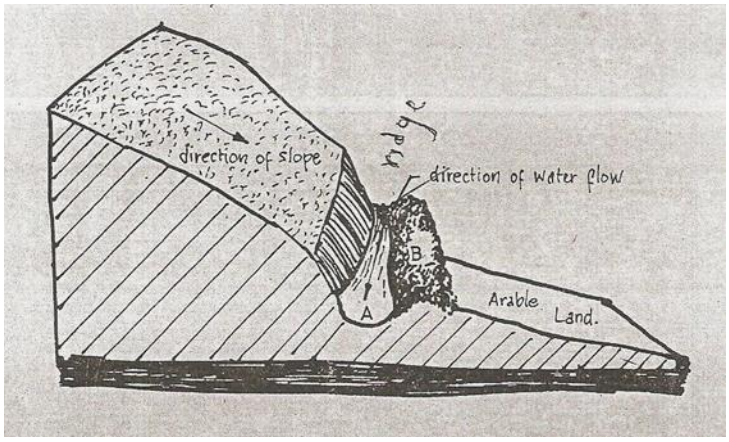

a.Identify the method of soil conservation illustrated **(1 mark)**

……

……

b.State **two** ways of strengthening the embankment at the lower side of the diagram **(2 marks)**

……

……

……

……

c.Name **four** areas into which the water collected above is discharged **(4marks)**

……

……

……

……

……

Prefer Calling Amobi Group of Examiners @ 0743 333 000 or 0706 851 439 for Marking Schemes

……

……

19. Below are the pests that commonly attack the crops. Study them carefully and answer questions that follow.

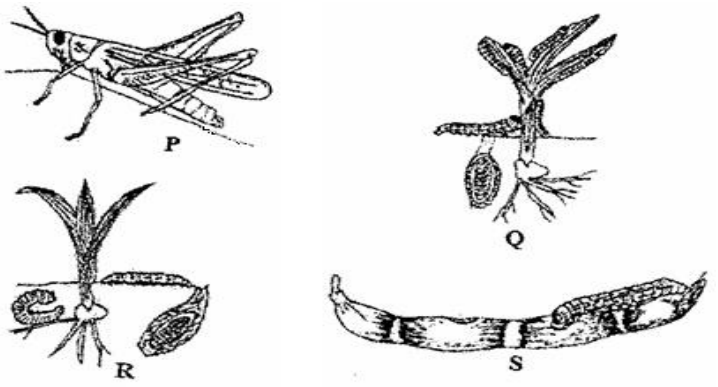

(a) Identify the pests labeled **P**, **Q**, **R** and **S**. **(2 marks)**

P…….. **Q**……

R…….. **S**……..

(b) What kind of mouth part does the pests above have? **(1mark)**

……

……

(c) Give **two** ways in which pests can be classified depending on their habitat **(2 marks)**

……

……

……

i) Name three methods that can be used to control the pests **(3 marks)**

……

……

……

……

……

……

Prefer Calling Amobi Group of Examiners @ 0743 333 000 or 0706 851 439 for Marking Schemes

SECTION C (40 MARKS)

Answer any two questions from this section in the spaces provided after question 22

20. a)Outline the economic importance of weeds **(12 marks)**

b)Discuss on the harmful effects of crop pests in the farm **(8 marks)**

21. Describe the production of tomatoes under the following sub headings

a)Varieties **(4 marks)**

b) Transplanting **(2 marks)**

c) Field management practices **(12marks)**

d) Harvesting and marketing **(2 marks)**

22. a) Explain the effects of solifluction/mass wasting **(6 marks)**

b) Discuss on the cultural methods of soil and water conservation **(14 marks)**

……

……

……

……

……

……

……

……

……

……

……

……

……

……

……

Prefer Calling Amobi Group of Examiners @ 0743 333 000 or 0706 851 439 for Marking Schemes

BRILLIANT STUDENTS

FORM 3 END TERM 3 SERIES 3 EXAMS

NAME: ……

SCHOOL: ……

ADM NO: …… SIGN: …… DATE: ……

443/2

AGRICULTURE

PAPER 2

TIME: 2 HOURS

INSTRUCTIONS:

This paper consists of 3 sections; A, B and C.

Answer all questions in section A and B and any two in section C.

SECTION A (30MKS)

1. State four reasons for castration in rams. **(2 mks)**

……

……

……

……

……

……

2. List any four conditions that pre-dispose an animal to disease or injury **(2 mks)**

……

……

……

Prefer Calling Amobi Group of Examiners @ 0743 333 000 or 0706 851 439 for Marking Schemes

……

……

……

3. State four functions of vitamins in Livestock. **(2 mks)**

……

……

……

……

……

……

4. State four factors one would consider when choosing feed **(2 mks)**

……

……

……

……

……

5. State four factors that may lead to dip wash being exhausted or weakened while in the dip tank. **(2 mks)**

……

……

……

……

……

6. Give two reasons why walls of dairy shed should be white washed instead of painting with oil paints. **(2 mks)**

……

……

……

……

7. List four tools used in laying concrete blocks. **(2 mks)**

……

……

……

Prefer Calling Amobi Group of Examiners @ 0743 333 000 or 0706 851 439 for Marking Schemes

……

……

……

8. State four reasons for treating timber used for fencing. **(2 mks)**

……

……

……

……

……

……

9. State four harmful effects of ticks to livestock **(2 mks)**

……

……

……

……

……

……

10. State four symptoms of liver fluke attack, that may be observed in animals **(2 mks)**

……

……

……

……

……

……

11. Outline four methods of controlling the fresh water snail. **(2 mks)**

……

……

……

……

……

……

Prefer Calling Amobi Group of Examiners @ 0743 333 000 or 0706 851 439 for Marking Schemes

12. State four ways of preparing the sow for furrowing. **(2 mks)**

……

……

……

……

……

……

13. Give two factors that may lead to conception failure after service in heifers. (2 mks)

……

……

……

……

14. Give two causes of soft shell in eggs. **(2 mks)**

……

……

……

……

15. State four management practices that would ensure maximum harvest of fish from fish pond. **(2 mks)**

……

……

……

……

……

……

SECTION B: (20 MARKS)

16. Use the diagram below to answer the questions that follow.

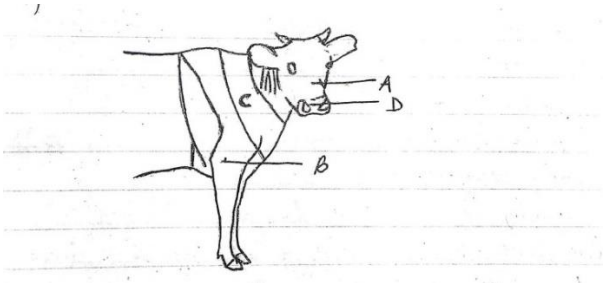

Prefer Calling Amobi Group of Examiners @ 0743 333 000 or 0706 851 439 for Marking Schemes

(a) Name the parts labeled A – D **(2 mks)**

……

……

……

……

……

……

(b) Name the breed of dairy cattle with the highest butter fat content in milk. **(1 mk)**

……

……

(c) Distinguish between a large white and a landrace breeds of pigs **(2 mks)**

……

……

……

……

17. Use the diagram below to answer the questions that follow

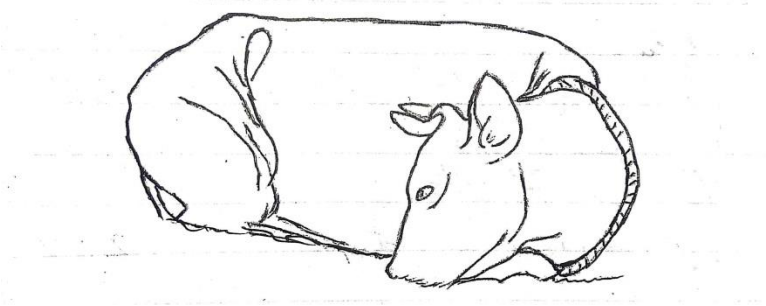

(a) Name the disease or disorder that makes the animal behave as shown above. **(1 mk)**

……

……

(b) State three prevention measures of the above problem. **(3 mks)**

……

……

……

……

……

Prefer Calling Amobi Group of Examiners @ 0743 333 000 or 0706 851 439 for Marking Schemes

(c) Define the term Pica as used in livestock nutrition. **(1 mk)**

……

……

……

18. Use the diagram below to answer the questions that follow

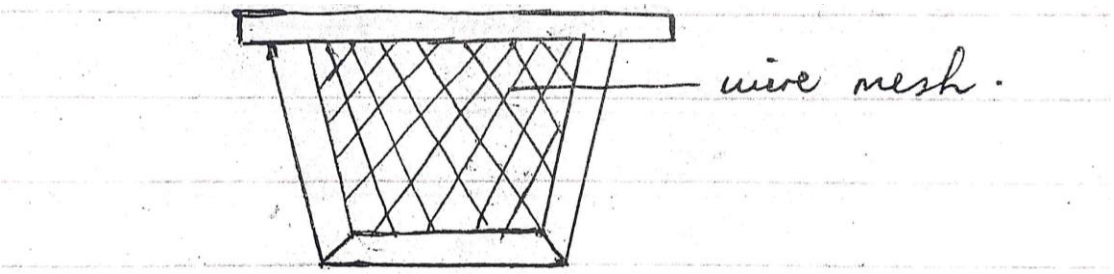

(a) Name the structure shown above. **(1 mk)**

……

……

(b) State the importance of the above structure where it's used. **(1 mk)**

……

……

(c) State three pests that affect organisms that use the above structure. **(3 mks)**

……

……

……

……

……

……

19. (a) State 3 systems involved in outbreeding **(3 mks)**

……

……

……

……

……

Prefer Calling Amobi Group of Examiners @ 0743 333 000 or 0706 851 439 for Marking Schemes

(b) State two advantages of natural mating. **(2 mks)**

……

……

……

……

SECTION C: (40 MARKS)

20. (a) Discuss the factors considered during selection of a breeding stock. **(10 marks)**

(b) Discuss five methods used during identification of animals. **(10 mks)**

21. (a) Discuss the mechanical methods used to control ticks. **(10 mks)**

(b) Discuss the general effects of parasites on livestock. **(10 mks)**

22. (a) Discuss the structural requirements of a calf pen. **(14 mks)**

(b) State six methods employed in parasites and disease control in livestock. **(6 mks)**

……

……

……

……

……

……

……

……

……

……

……

……

……

……

Prefer Calling Amobi Group of Examiners @ 0743 333 000 or 0706 851 439 for Marking Schemes

BRILLIANT STUDENTS

FORM 3 END TERM 3 SERIES 3 EXAMS

NAME: ……

SCHOOL: ……

ADM NO: …… **SIGN:** …… **DATE:** ……

231/1

BIOLOGY FORM THREE.

Paper 1

Time: 2 Hours

INSTRUCTIONS TO CANDIDATES:

- Write **your name** , **ADM Number** and **CLASS** in the spaces provided above.
- Answer **all** the questions in this question paper.
- Answers **must** be written in the spaces provided in this booklet.
- All answers must be written in English
- This paper consists of 14 printed pages. Candidates should check to ascertain that all papers are printed as indicated and that no questions are missing

EXAMINER'S USE ONLY

Question	Maximum score	Candidate's score
1- 30	80	

Prefer Calling Amobi Group of Examiners @ 0743 333 000 or 0706 851 439 for Marking Schemes

1. What do the following branches of Biology deal with? **(2marks)**

(a) Cytology

……

……

(b) Entomology

……

……

2. State TWO characteristics of kingdom Monera that are not found in other kingdoms. **(2marks).**

……

……

……

……

……

3. Two species in an ecosystem cannot occupy the same niche. Explain. **(1 mark)**

……

……

……

4. State two functions of aerenchyma tissue in hydrophytes. **(2marks)**

……

……

……

……

5. The diagram below shows results of what happens to plant cell when placed in a certain solution.

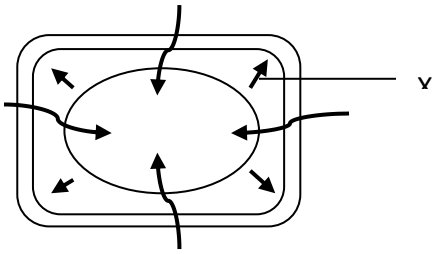

a) What was the nature of the solution in which the cell was placed? **(1 mark)**

……

……

Prefer Calling Amobi Group of Examiners @ 0743 333 000 or 0706 851 439 for Marking Schemes

b) Identify the force represented by the arrow X and explain how it develops. **(2 marks)**

……

……

……

……

6. Which organelle would be numerous in the following cells**;** **(2 marks)**

a) Liver cell

……

……

b) Palisade cell

……

……

7. The scientific names of three animals leopard, wolf and lion in the family carnivora are; Panthera pardus, Canis lupas and Panthera leo respectively.

a) Why are scientific names given in Latin**?** **(1 mark)**

……

……

b) What does *Canis* refer to? **(1 mark)**

……

……

……

c) Giving a reason, state the organisms that are MOST closely related. **(1 mark)**

……

……

……

8. The word equation below shows a biological process.

Water $\xrightarrow{\quad}$ Hydrogen atom + oxygen

a) Name the process. **(1 mark)**

……

……

Prefer Calling Amobi Group of Examiners @ 0743 333 000 or 0706 851 439 for Marking Schemes

b) Where does the process named in a) above take place? **(1 mark)**

……

……

c) State two conditions necessary for the process to occur**.** **(2 marks)**

……

……

……

……

9. a) What is the importance of heartbeat in blood circulation? **(1 mark)**

……

……

……

b) If the nerve supply to the heart of a mammal is severed, the rhythmic heart movement will still go on and the heart continues to beat. Explain this observation. **(1 mark)**

……

……

……

10. State the difference between habitat and ecological niche. **(2 marks)**

……

……

……

……

11. The diagram below represents a stage during cell division.

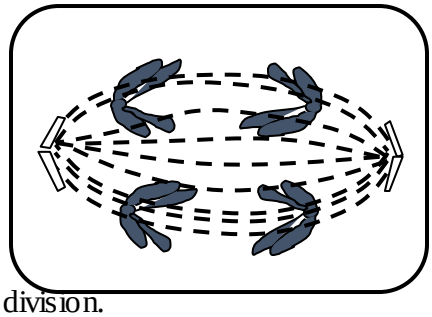

a) Name the stage of cell division. **(1 mark)**

……

……

Prefer Calling Amobi Group of Examiners @ 0743 333 000 or 0706 851 439 for Marking Schemes

b) Give two reasons for your answer in a) above. **(2 marks)**

……

……

……

……

c) State the significance of this stage of cell division in living organisms. **(1 mark)**

……

……

……

12.) Name the causative agent for the following diseases;

a) Typhoid **(1 mark)**

……

……

b) Amoebic dysentery. **(1 mark)**

……

……

13. Examine the diagram below and answer the questions that follow.

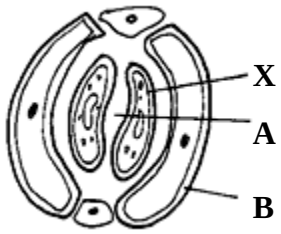

(a) Name the structures labeled: **(3mks)**

A: ……

B: ……

X: ……

14. a) Name the respiratory surface for gaseous exchange in insects. **(1 mark)**

……

……

b) State two adaptations of the site named in a) above. **(2 marks)**

……

……

Prefer Calling Amobi Group of Examiners @ 0743 333 000 or 0706 851 439 for Marking Schemes

……

……

……

……

15. The graph below shows the effect of substrate concentration on the rate an enzyme catalyzed reaction.

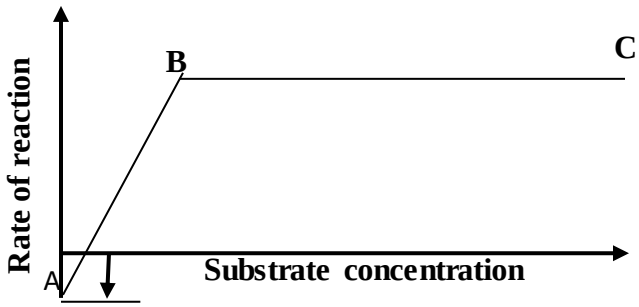

(a) Account for the shape of the graph between region B and C. **(2mks)**

……

……

……

……

……

(b) How can the rate of reaction be increased after point B? **(2mks)**

……

……

……

……

……

16. Explain the meaning of the following terms;

a) Basal Metabolic Rate **(1 mark)**

……

……

……

b) Oxygen Debt **(1 mark)**

……

……

Prefer Calling Amobi Group of Examiners @ 0743 333 000 or 0706 851 439 for Marking Schemes

……

……

……

17. In an experiment, the concentration of ions in the cell sap of reeds growing in a swampy area and the water in the swamp were determined. The data below was obtained. Study it and answer the questions that follow:

Sample	Na^+	Mg^{2+}	Cl^-	SO_4^{2-}
Cell sap	50	11	101	13
Swamp water	1.2	30	10.2	0.67

a) Name the process by which uptake of the following ions by the reeds occurs. **(2 marks)**

Na^+ ions .....

Mg^{2+} ions .....

b) What effect would reduced oxygen supply have on the uptake of sulphate ions? **(2 marks)**

Explain your answer.

……

……

……

……

……

18. The diagram below shows a part of a nephron.

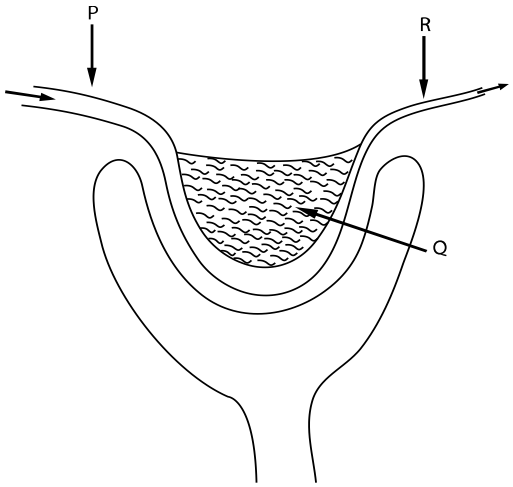

Prefer Calling Amobi Group of Examiners @ 0743 333 000 or 0706 851 439 for Marking Schemes

a) State TWO differences in composition of blood in parts P and R. **(2 marks)**

……

……

……

……

……

b) State a characteristic feature of blood capillaries in part Q that is not found in other capillarities **(1 mark)**

……

……

……

19.) State **two** functional differences between arteries and veins in mammals. **(2mks)**

Arteries	Veins

20. A set up was used to investigate a certain process in plants as shown in the diagram below.

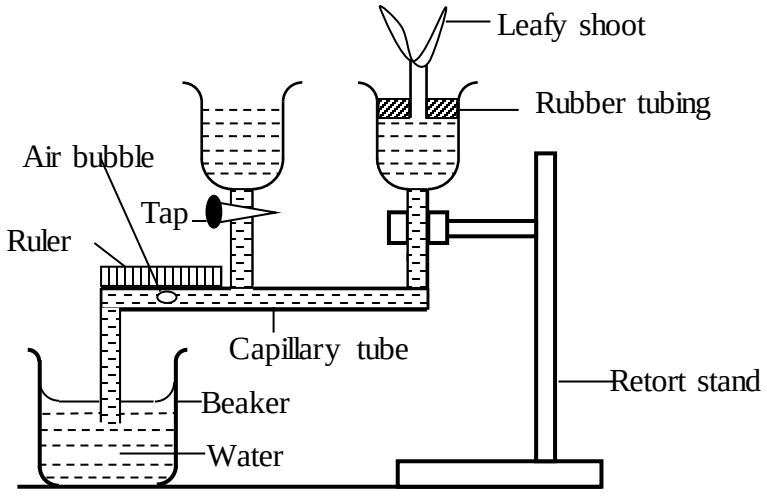

(a) What process was being investigated**?** **(1 mark)**

……

……

Prefer Calling Amobi Group of Examiners @ 0743 333 000 or 0706 851 439 for Marking Schemes

(b) Giving a reason, state one precaution that should be taken when setting up this experiment. **(1 mark)**

Reason

……

Precaution

……

(c) How would changes in environment temperature affect the rate of movement of the air bubble**?** **(1 mark)**

……

……

21. Julie observed eight onion epidermal cells across the field of view of a light microscope. If the field of view was 4mm in diameter, estimate the average size of the cells in micrometers (1mm= 1000μm). **(2 marks)**

22.) State **two** ways in which root hairs are adapted to their functions. **(2mks)**

……

……

……

23. Explain how high humidity affects the rate of transpiration. **(2mks)**

……

……

……

……

24. Give **three** differences between aerobic and anaerobic respiration. **(3mks)**

Aerobic respiration	Anaerobic respiration

Prefer Calling Amobi Group of Examiners @ 0743 333 000 or 0706 851 439 for Marking Schemes

25. State **one** use of each of the following excretory products in plants.

(i) Tanin **(1mk)**

……

……

(ii) Colchicine **(1mk)**

……

……

(iii) Quinine **(1mk)**

……

……

26. State THREE adaptations of a leaf to gaseous exchange. **(3 marks)**

……

……

……

……

……

……

……

……

27. State **three** types of asexual reproduction. **(3mks)**

……

……

……

……

……

28.) Give **three** sources of water pollution. **(3mks)**

……

……

……

……

……

Prefer Calling Amobi Group of Examiners @ 0743 333 000 or 0706 851 439 for Marking Schemes

29. Name the antigens that determine human blood groups. **(2mks)**

……

……

30. a) The action of pepsin stops in the duodenum. Explain. **(2 marks)**

……

……

……

……

b) State two functions of the ileum in the alimentary canal of mammals. **(2 marks)**

……

……

……

……

TRUST IN THE MOST HIGH GOD

Prefer Calling Amobi Group of Examiners @ 0743 333 000 or 0706 851 439 for Marking Schemes

BRILLIANT STUDENTS

FORM 3 END TERM 3 SERIES 3 EXAMS

NAME: ……

SCHOOL: ……

ADM NO: …… **SIGN:** …… **DATE:** ……

231/2

BIOLOGY PAPER 2

TIME: 2 HOURS

FORM THREE

INSTRUCTIONS TO CANDIDATES:

- *Write **your name** and **admission number** in the spaces provided.*
- *Sign and write the date of examination.*
- *This paper consists of **two** sections A and B. Answer **all** the questions in Section **A** in the spaces provided.*
- *In section **B** answer questions **6** (compulsory) and either question **7** or **8** in the spaces provided.*
- *Check and ascertain that no questions are missing.*

For Examiner's Use Only:

SECTIONS	QUESTION	MAXIMUM SCORE	ANDIDATES SCOR
A	1	8	
	2	8	
	3	8	
	4	8	
	5	8	
B	6	20	
	7	20	
	8	20	
TOTAL SCORE		80	

Prefer Calling Amobi Group of Examiners @ 0743 333 000 or 0706 851 439 for Marking Schemes

SECTION A (40 MARKS)

Answer all questions in this section

1.The following organisms were found to exist in a certain ecosystem, lizards, grass, Grasshopper, centipedes, ants, toads, millipedes and snakes.

a) In a chart below, fill in the boxes A to D with the organisms listed above to complete a food web in the ecosystem. **(4mks)**

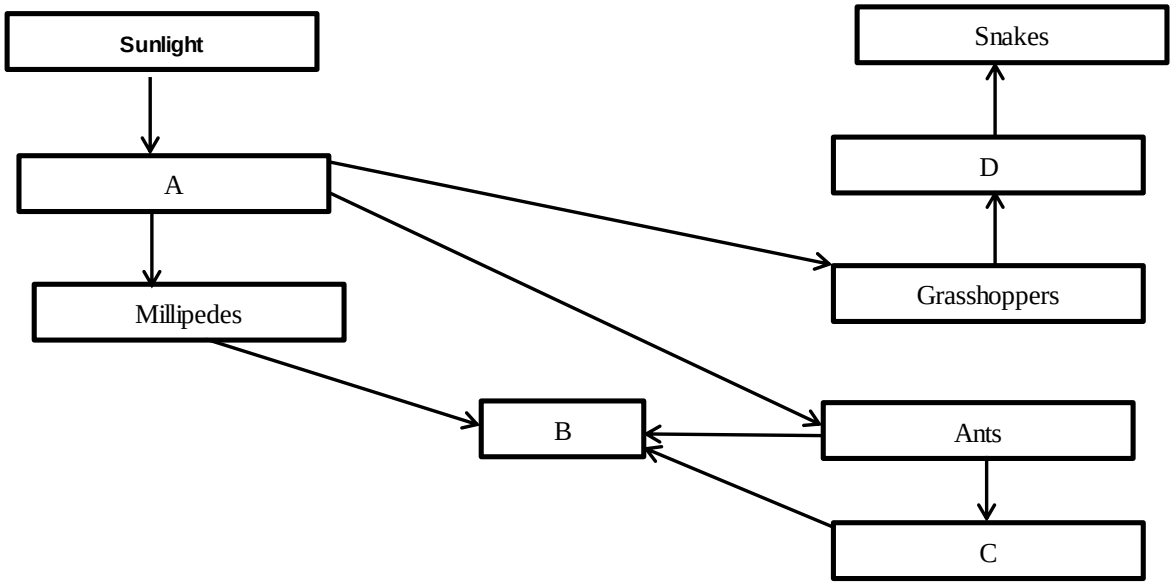

b) From the list of organisms given above, name the organism which has the largest biomass. **(1mks)**

……

……

c) Give a reason for your answer. **(1mks)**

……

……

……

……

d) Explain the ecological importance of fungi to plants. **(2mks)**

……

……

……

……

Prefer Calling Amobi Group of Examiners @ 0743 333 000 or 0706 851 439 for Marking Schemes

2.The set up shown was used to investigate a certain process. The set up was left in bright sunlight for 4 hours.

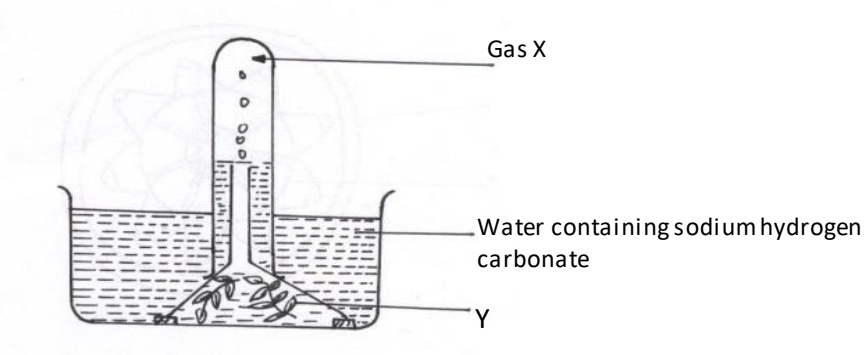

a) State the aim of experiment **(1mk)**

……

……

b) Name X and Y **(2mks)**

……

……

……

c) Other than sunlight name three factors that would affect the experiment **(3mks)**

……

……

……

……

……

d) State how the identity of gas X could be confirmed **(1mk)**

……

……

……

e) Explain why submerged water plants was used in the experiment **(1mk)**

……

……

……

Prefer Calling Amobi Group of Examiners @ 0743 333 000 or 0706 851 439 for Marking Schemes

3. (a)What is meant by:

i) Autecology **(1mk)**

……

……

ii) Synecology **(1mk)**

……

……

(b) Using the table below, answer the questions that follow

	Number of stomata	
Leaf	**Upper epidermis**	**Lower epidermis**
A	300	0
B	150	200
C	02	13

Suggest the possible habitat of the plants from the leaves were obtained **(3mks)**

A……

B……

C……

(c) State the modifications in the stomata of leaf C **(3mks)**

……

……

……

……

……

……

Prefer Calling Amobi Group of Examiners @ 0743 333 000 or 0706 851 439 for Marking Schemes

4. In an investigation, a raw banana was peeled, mashed into a paste and treated as shown in the set up below.

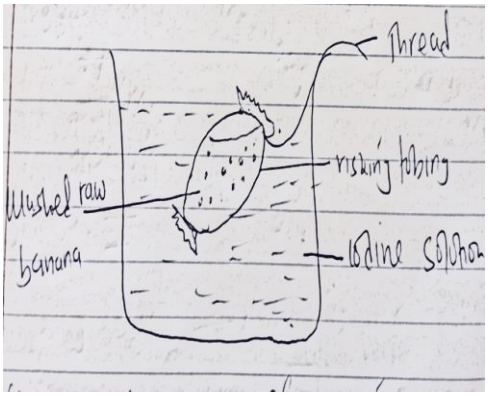

a) Name the physiological process being investigated **(1mk)**

……

……

b) State the expected observations in the above set up after 30 minutes **(2mks)**

……

……

……

……

c) Account for the observations made in (b) above. **(2mks)**

……

……

……

……

d) State three role of active transport in human **(3mks)**

……

……

……

……

……

Prefer Calling Amobi Group of Examiners @ 0743 333 000 or 0706 851 439 for Marking Schemes

5. Study the table below and answer the questions that follows:

substance	% in blood Plasma	% in glomerular Filtrate	% in urine
Water	100	90	60
Protein	6.5	0	0
Urea	0.03	0.03	1.8
glucose	0.1	0.1	0

a) Why is the concentration of protein in glomerular filtrate and urine zero? **(1mk)**

……

……

a) (i) By how many times is urea more concentrated in urine than in glomerular Filtrate? **(1mk)**

……

……

(ii) Explain why there is greater concentration of urea in urine than glomerular filtrate **(1mk)**

……

……

……

b) Explain why there is no glucose in urine **(1mk)**

……

……

c) State the economic importance of the following plant excretory products

i) Rubber **(1mk)**

……

……

ii) Papain **(1mk)**

……

……

d) State two reasons why plants lack complex excretory organs. **(2mks)**

……

……

……

……

Prefer Calling Amobi Group of Examiners @ 0743 333 000 or 0706 851 439 for Marking Schemes

SECTION B: (40MARKS)

Answer question 6 (compulsory) and either question 7 or 8 in the spaces provided.

6. During germination and growth of cereal, the dry weight of the endosperm, the weight of the embryo and the total dry weight were determined at two days intervals. The results are shown in the table below.

Time after planting (days)	Dry weight of endosperm (mg)	Weight of embryo (mg)	Total dry weight (mg)
0	43	2	45
2	40	2	42
4	33	7	40
6	20	16	37
8	10	25	35
10	6	33	39

(a) On the same axes, plot a graph of dry weight of endosperm, weight of the embryo and the total dry weight against time. **(8mks)**

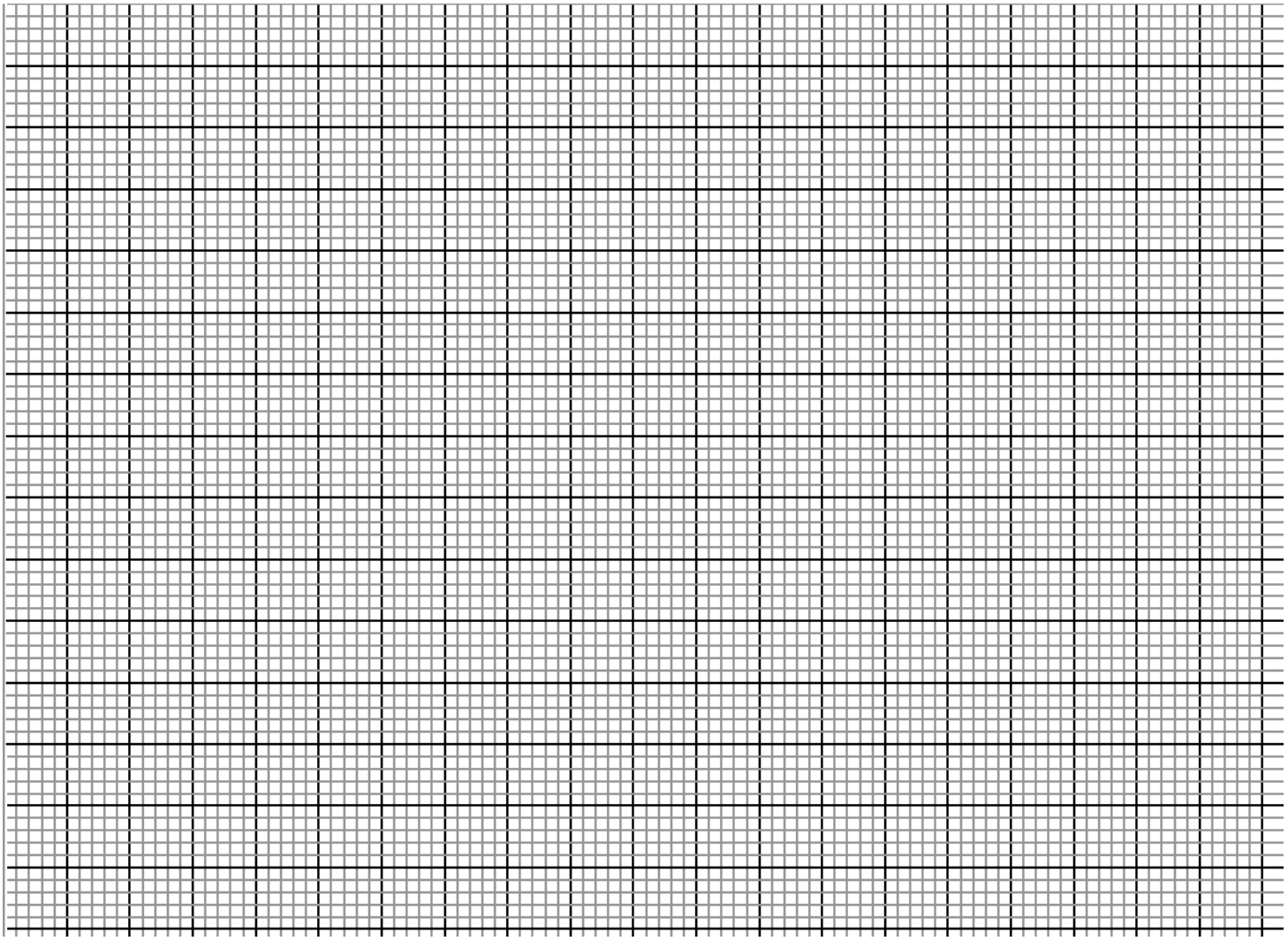

Prefer Calling Amobi Group of Examiners @ 0743 333 000 or 0706 851 439 for Marking Schemes

(b) What was the total dry weight on day 5? **(1mk)**

……

……

……

(c) Account for the;

i) Decrease in dry weight of the endosperm from day 0 to 10 **(2 mks)**

……

……

……

……

ii) Increase in weight of the embryo from day 0 to 10 **(2mks)**

……

……

……

……

iii) Decrease in the total dry weight from day 0 to 8 **(1mk)**

……

……

……

iv) Increase in the total dry weight after day 8 **(1mk)**

……

……

……

(d) State two factors within the seed and two outside the seed that cause dormancy. Inside seed

Inside seed **(2mks)**

……

……

……

……

Prefer Calling Amobi Group of Examiners @ 0743 333 000 or 0706 851 439 for Marking Schemes

7. (a) Explain how xerophytes are adapted to their habitat. **(12mks)**

(b) State four differences between mitosis and meiosis.. **(8mks)**

8. (a) Explain inspiration in the gills of bony fish **(10mks)**

(b) Explain the factors affecting the rate of breathing in humans **(10mks)**

Prefer Calling Amobi Group of Examiners @ 0743 333 000 or 0706 851 439 for Marking Schemes

BRILLIANT STUDENTS

FORM 3 END TERM 3 SERIES 3 EXAMS

NAME: ……

SCHOOL: ……

ADM NO: …… **SIGN:** …… **DATE:** ……

231/3

BIOLOGY FORM THREE

TIME: $1\frac{3}{4}$ HOURS

INSTRUCTIONS TO CANDIDATES:

- *Answer **ALL** the questions*
- *Answers should be written in the spaces provided*

1.Below is a photograph of an adult human jaw with teeth. Study the diagram and answer the questions that follow.

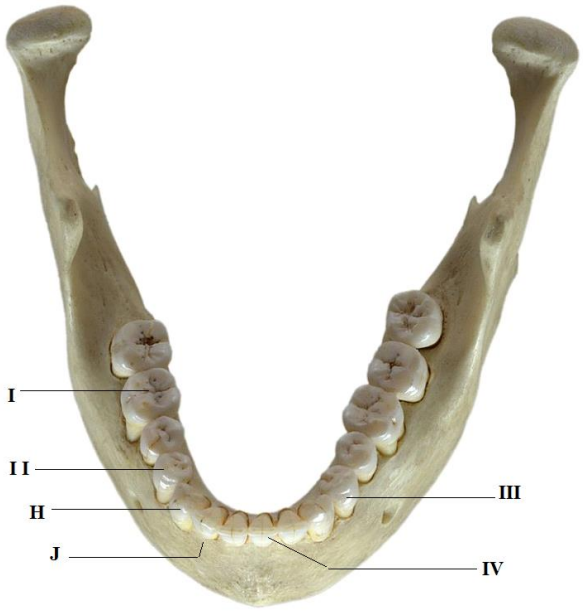

a) State the mode of nutrition in man. **(1mk)**

……

……

Prefer Calling Amobi Group of Examiners @ 0743 333 000 or 0706 851 439 for Marking Schemes

b) Name the type of teeth labeled I and III. **(2mks)**

I:……

III:……

c) Name the parts of teeth labeled H and J. **(2mks)**

H:……

J:……

d) Identify **one** distinguishing feature between teeth labeled II and IV. **(1mk)**

……

……

e) State **one** function of tooth IV. **(1mk)**

……

……

f) Write the dental formula from the jaw shown in the photograph. **(1mk)**

g) Explain why tooth I would be more prone to dental carries than tooth III, **(2mks)**

……

……

……

……

2. Use the hand lens provided to observe specimen K and answer the questions that follow.

a) (i) In the space below draw a fully labeled diagram of representative part of the specimen. **(5mks)**

Prefer Calling Amobi Group of Examiners @ 0743 333 000 or 0706 851 439 for Marking Schemes

(ii) Calculate the magnification of your drawing. **(2mks)**

b) Identify:

(i) The Kingdom **(1mk)**

……

……

(ii) The Division, to which the specimen belongs. **(1mk)**

……

……

(iii) Give a reason for your answer in b (ii) above. **(1mk)**

……

……

c) State the functions of any **two** parts labeled in your diagram. **(2mks)**

……

……

……

d) What is the mode of reproduction in the specimen? **(1mk)**

……

……

e) Explain the significance of colour observed in the specimen M. **(2mks)**

……

……

……

……

3. You are provided with solutions labeled L_1, L2 and L_3. Note that L_3 is the same as L2 except that L_3 has been boiled.

Label three test- tubes A, B and C.

Into the test- tube labeled A add 1ml of solution L_1.

Into the test- tube labeled B add 1ml of L_1 and 1ml of L_2.

Into the test- tube labeled C add 1ml of L_1 and 1ml of L_3.

Prefer Calling Amobi Group of Examiners @ 0743 333 000 or 0706 851 439 for Marking Schemes

a) Withdraw a drop from test – tube A and place it on a white tile. To the drop add one drop of iodine solution. Record your observation in the table below. **(3 mks)**

Test - tube	observation	conclusion
A		
B		
C		

Repeat the procedure with contents in test – tubes B and C. Record your observations in the table.

Place the three test –tubes labeled A, B and C into a water bath at 37^0C.

Prefer Calling Amobi Group of Examiners @ 0743 333 000 or 0706 851 439 for Marking Schemes

NB. Ensure that the temperature of the water bath does not fall below 35^0C or exceed 38^0C

b) After 30 minutes, test the contents of each of the test – tubes labeled A, B and C following the procedure in (a) above. Record your observations in the table below. **(6 mks)**

Test - tube	observation	conclusion
A		
B		
C		

Prefer Calling Amobi Group of Examiners @ 0743 333 000 or 0706 851 439 for Marking Schemes

c) Why was test – tube labeled A included in the experiment? **(1mk)**

……

……

……

d) **(i)** suggest the identity of solution L_2 **(1mk)**

……

……

(ii) Give a reason for your answer in (d) i above. **(1 mk)**

……

……

……

e) Suggest a part of the alimentary canal in the body of a mammal where the process being investigated in the experiment would take place. **(1mk)**

……

……

……

f) Account for the results at the end of the experiment in the test – tube labeled.

i) B **(1mk)**

……

……

……

ii) C **(1mk)**

……

……

……

……

Prefer Calling Amobi Group of Examiners @ 0743 333 000 or 0706 851 439 for Marking Schemes

BRILLIANT STUDENTS

FORM 3 END TERM 3 SERIES 3 EXAMS

NAME: ……..……

SCHOOL: ……..……..

ADM NO: ……..…… **SIGN:** …… **DATE:** ……..……...

END OF TERM 3 EXAMINATION

BUSINESS STUDIES PAPER ONE

TIME.2hrs

1 a) Outline four reasons why organizations need to safe keep documents in files **(4mks)**

……

……

……

……

……

2. Give the four components of business studies **(4mks)**

……

……

……

……

……

3. A business is expected to be socially responsible to various groups such as customers, employees, government, public and suppliers. Indicate against each statement the most appropriate group (5mks)

Statement	Group
i)Fair remuneration	
ii)Timely tax returns	
iii)Fairness in tender allocation	
iv)Equal job opportunities	
Quality products	

Prefer Calling Amobi Group of Examiners @ 0743 333 000 or 0706 851 439 for Marking Schemes

4. Use the table below to outline four differences between basic wants and secondary wants **(4mks)**

Basic wants	Secondary wants

5. Identify three activities in the extractive level of production **(4mks)**

……

……

……

……

……

6. Outline four ways in which partners may be classified **(4mks)**

……

……

……

……

……

7. Highlight four characteristics of mail order store **(4mks)**

……

……

……

……

……

8. Outline the meaning of the following terms as used in accounting **(4mks)**

i)Network of a business

……

Prefer Calling Amobi Group of Examiners @ 0743 333 000 or 0706 851 439 for Marking Schemes

……

ii)Business transaction

……

……

iii)Cash transaction

……

……

vi)Credit transaction

……

……

9. State four main factors that may limit the level of a country's national income. **(4mks)**

……

……

……

……

……

10. Identify four ways in which a business may be of benefit to people in the surrounding area **(4mks)**

……

……

……

……

……

11. State the effect of each of the following transaction on the balance sheet by writing increase or decrease or no effect in each case

Transaction	Effect
a)Bought machinery on credit	
b)withdrew cash from the business for personal	
c)Purchased stock in cash	
d)Paid outstanding by cheque	

Prefer Calling Amobi Group of Examiners @ 0743 333 000 or 0706 851 439 for Marking Schemes

12. State four ways of increasing efficiency and effectiveness of human porterage

……

……

……

……

……

13. The following information relates to Makuyu Traders. Determine the missing figures. **(3mks**)

	Assets	Liabilities	Capital
a)	50000	70000	
b)	320000		280000
c)		14360	12000

14 .Post the following transactions in the ledger books of Embakasi traders **(4mks)**

March 1/2013 commenced business with sh. 150,000 cash at bank

March 5/2013 bought machinery in credit for sh. 9500

March 7/2013 withdrew sh 5000 from bank for office use

March 8/2013 paid sh 3000 cash to creditor

15. Give four reasons that make insurance companies decline to insure acts of nature **(4mks)**

……

……

……

……

……

……

Prefer Calling Amobi Group of Examiners @ 0743 333 000 or 0706 851 439 for Marking Schemes

16. Name 4 sources of business ideas. **(4mks)**

……

……

……

……

……

……

17. State 4 office etiquette of a business person. **(4mks)**

……

……

……

……

……

……

18.Mention four main types of demand. **(4mks)**

……

……

……

……

……

……

20. Name 4 methods of government involvement in business **(4mks)**

……

……

……

……

……

……

21.Name 4 types of public utilities. **(4mks)**

……

……

Prefer Calling Amobi Group of Examiners @ 0743 333 000 or 0706 851 439 for Marking Schemes

……

……

……

……

22. Name 4 barriers of effective communication. **(4mks)**

……

……

……

……

……

……

23. Name 4 types of life assurance contracts **(4mks)**

……

……

……

……

……

……

24. Name 4 characteristic of a good filing system. **(4mks)**

……

……

……

……

……

……

25. Give 4 characteristics of oligopoly market structure. **(4mks)**

……

……

……

……

……

……

Prefer Calling Amobi Group of Examiners @ 0743 333 000 or 0706 851 439 for Marking Schemes

BRILLIANT STUDENTS

FORM 3 END TERM 3 SERIES 3 EXAMS

NAME: ……..

SCHOOL: ……...

ADM NO: …… **SIGN:** …… **DATE:** ……...

565/2

BUSINESS STUDIES PAPER 2

FORM 3

END OF TERM 3 EXAMINATION

TIME: 2 ½ HOURS

Instructions.

Answer any five questions.

1.a. Explain five features of sole proprietorship form of business. **(10mks)**

b. Explain five demerits that maybe associated with water transport. **(10mks)**

2.a. State and explain five measures that maybe taken by the Kenyan government to reduce the level of unemployment. **(10mks)**

b. Explain five circumstances which would make an office manager to replace an existing machine with a modern one. **(10mks)**

3.a. Give and explain five reasons why an increase in per capita income may not lead to a rise in standard of living. **(10mks)**

b. Explain five reasons for the popularity of hypermarkets in Kenya. **(10mks)**

Prefer Calling Amobi Group of Examiners @ 0743 333 000 or 0706 851 439 for Marking Schemes

4.a. There are numbers of circumstances under which business enterprises may choose to merge. Explain five of them. **(10mks)**

b. The government of Kenya has decided to sell her poorly performing businesses to private investors. Explain five reasons for this kind of move. **(10mks)**

5.a With the aid of a diagram show the effect of an increase in the supply of a commodity, while demand remains constant. (10mks)

b. Explain five ways in which commercial attaches promotes a country's trade with other countries. **(10mks)**

6.a. Explain five problems linked to rapid population growth. **(10mks)**

b. The following balances were extracted from the books of Umoja Traders on 1st October 2020 **(10mks)**

details	**shs.**
Capital	80,000
Furniture	56,000
Debtors	25,000
Creditors	20,000
Cash	8,000
Bank	11,000

The following transactions took place in the course of the month.

i. Took shs. 3000 from bank for family use.
ii. Paid a creditor shs. 4500 in cash.
iii. Purchased land worth shs. 82,000 paying by cheque.
iv. Acquired a ten year bank loan shs. 165,000 which was credited to the business bank account.
v. Converted a family table worth shs. 5,500 to business use.
vi. Received shs. 7,300 in cash from debtors.

Required:

Prepare Umoja traders balance sheet at the end of October 2020.

Prefer Calling Amobi Group of Examiners @ 0743 333 000 or 0706 851 439 for Marking Schemes

Prefer Calling Amobi Group of Examiners @ 0743 333 000 or 0706 851 439 for Marking Schemes

BRILLIANT STUDENTS

FORM 3 END TERM 3 SERIES 3 EXAMS

NAME: ……..

SCHOOL: ……...

ADM NO: …… SIGN: …… DATE: ……...

233/1

CHEMISTRY

PAPER 1

FORM III

Time: 2 hours

END OF TERM 3 EXAMINATIONS

INSTRUCTIONS TO THE CANDIDATES:-

- Write your **name** and admission **number** on the spaces provided.
- Answer ***all*** the questions in the spaces provided.
- Mathematical tables and electronic used calculators may be
- All working **MUST** be clearly shown where necessary.

Question	Maximum score	Candidate's score
1-30	80	

Prefer Calling Amobi Group of Examiners @ 0743 333 000 or 0706 851 439 for Marking Schemes

1. Matter exists in three states which can be related as shown in the diagram below.

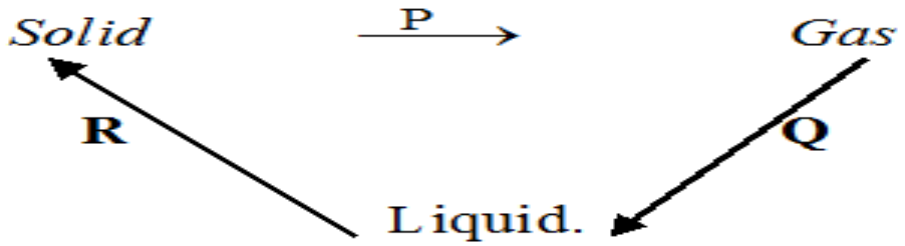

Name processes: ***P***: …….. **(1mk)**

R: …….. **(1mk)**

2.(a) Give **one** reason some of the laboratory apparatus are made of ceramics. **(1 mark)**

……

……

……

(b)Name **two** apparatus that can be used to measure approximately 75 cm of dilute sulphuric (VI) acid. **(2 marks)**

……

……

……

……

3.Draw the procedural set-ups that can be used to separate a mixture of sand and calcium chloride to obtain crystals of calcium chloride. **(3 marks)**

Prefer Calling Amobi Group of Examiners @ 0743 333 000 or 0706 851 439 for Marking Schemes

4. State **two** applications of chromatography. **(2 marks)**

……

……

……

……

5.

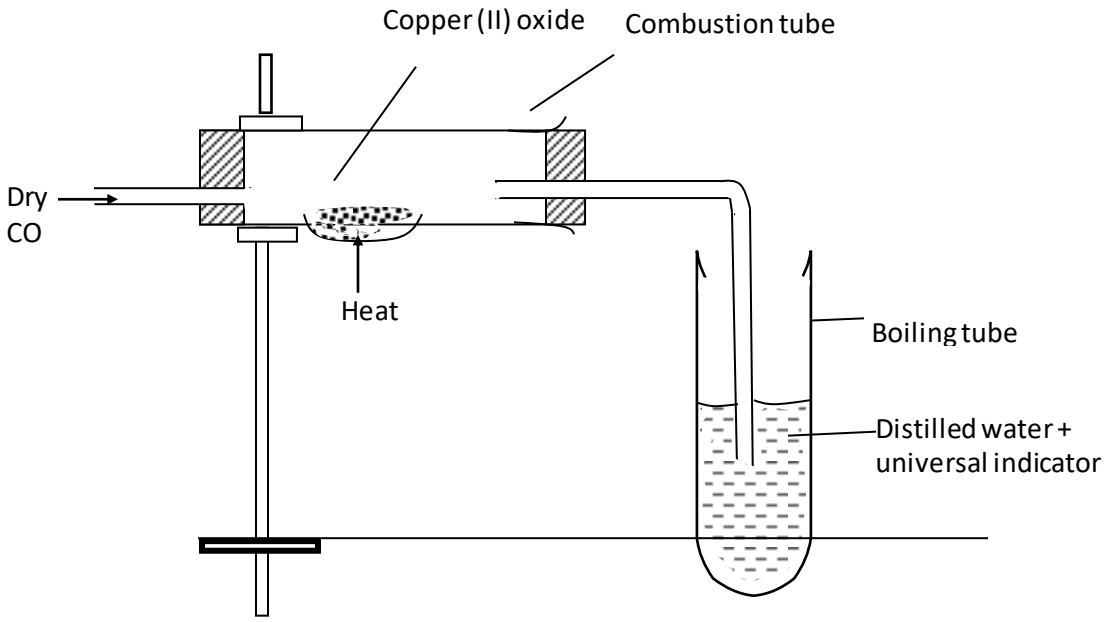

The above set-up was used to determine the chemical properties of carbon (II) oxide.

(a) Write the chemical equation for the reaction taking place in the combustion tube. **(1 mark)**

……

……

(b) State and explain the observation made in the boiling tube. **(2 marks)**

……

……

……

……

……

Prefer Calling Amobi Group of Examiners @ 0743 333 000 or 0706 851 439 for Marking Schemes

6. A student placed some hydrogen peroxide in a test tube then added a small amount of Solutions can be classified as acids, bases or neutral. The table below shows solutions and their pH values

Solution	pH – values
K	1.5
L	7.0
M	14.0

(a) Select any pair that would react to form a solution of pH 7 **(1 Mark)**

……

……

(b) Identify two solutions that would react with aluminium hydroxide. Explain ***(2 Marks)***

……

……

……

7. 9.12g of a gaseous compound contains 8g of silicon while the rest is hydrogen. Determine the empirical formula of the compound. (H = 1, Si = 28) ***(3 Marks)***

8. Study the set-up below and answer the questions that follow.

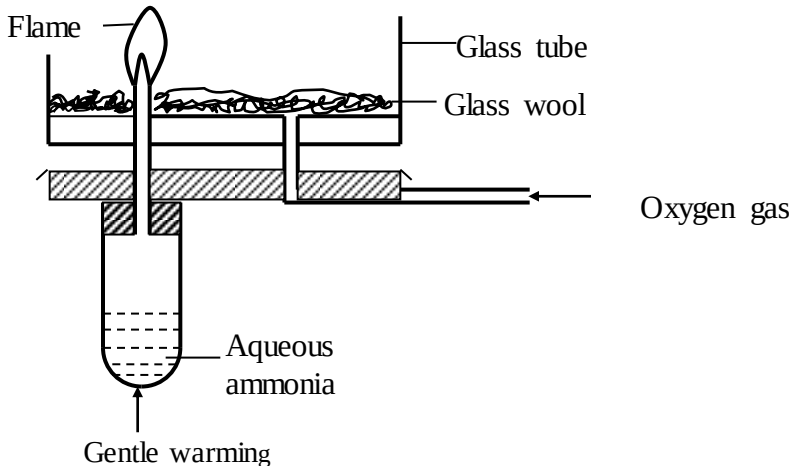

Prefer Calling Amobi Group of Examiners @ 0743 333 000 or 0706 851 439 for Marking Schemes

(a) Why is aqueous ammonia warmed gently? ***(1 Mark)***

……

……

(b) What is the colour of the flame? ***(1 Mark)***

……

……

(c) Write the chemical equation for the reaction that takes place ***(1Mark)***

……

……

9. (a) Chlorine can be prepared in the laboratory by using the following reagents and chemicals.

Concentrated sulphuric (VI) acid, water, manganese (IV) oxide, concentrated hydrochloric acid.

(i) State the role of concentrated sulphuric (VI) acid. **(1 mark)**

……

……

(ii) Write the equation for formation of chlorine. **(1 mark)**

……

……

(iii) What is the role of manganese (IV) oxide? **(1 mark)**

……

……

10. (a) State Boyle's law. **(1 mark)**

……

……

……

(b) A gas occupies $270cm^3$ at a pressure of 660mmHg at 37^0C. What is the new volume if pressure is changed to 810 mmHg at 63^0 C? **(2 marks)**

Prefer Calling Amobi Group of Examiners @ 0743 333 000 or 0706 851 439 for Marking Schemes

11. An organic compound contain s 24.24% carbon, 4.04% hydrogen and the rest chlorine. If its relative molecular mass is 99, what is its molecular formula? **(3 marks)**

(C = 12, H = 1, Cl = 35.5)

12. A given mass of sodium nitrate was heated completely and 320 cm^3 of the gas was produced at s.t.p. Determine the mass of the sodium nitrate heated.

(Na = 23. N = 14, O = 16, molar gas volume = 22.4L) **(3 marks)**

13. (a) Give **one** advantage of using methyl orange over phenolphthalein as an indicator. **(1 mark)**

……

……

……

(b) Three drops of litmus solution was added to 20 cm^3 of 2M hydrochloric acid in a beaker followed by 20 cm^3 of 2M ammonium hydroxide. State and explain the observation made. **(2 marks)**

……

……

……

……

……

Prefer Calling Amobi Group of Examiners @ 0743 333 000 or 0706 851 439 for Marking Schemes

14. Study the flow chart below and answer the questions that follow.

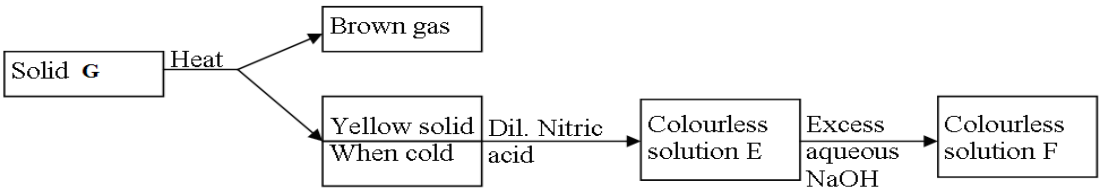

(a) ***Identify*** solid ***G*****……** **(1mk)**

(a) ***Write*** a balanced ***chemical equation*** between the yellow solid and dilute nitric acid**.** **(1mk)**

……

……

15. Study the diagram below and answer the questions that follow.

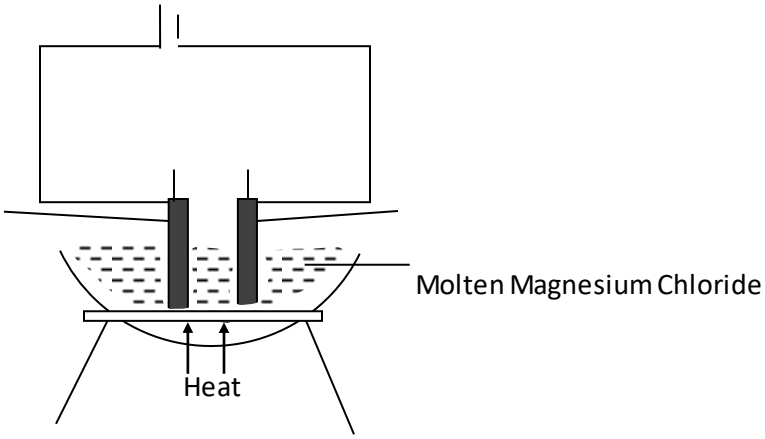

(a)Define the term electrolysis. **(1 mark)**

……

……

……

(b) On the diagram, label the Anode and Cathode. **(2 marks)**

(c) Write the equation at the anode. **(1 mark)**

……

……

Prefer Calling Amobi Group of Examiners @ 0743 333 000 or 0706 851 439 for Marking Schemes

16. In order to find the proportion by volume of gases in air, a sample of air was passed through two wash bottles, the first containing sodium hydroxide solution and the second containing concentrated sulphuric (VI) acid. The remaining gas was then collected in a syringe.

(a) Why was the air passed through;

(i) sodium hydroxide solution? **(1 mark)**

……

……

(ii) concentrated sulphuric (VI) acid? **(1 mark)**

……

……

(b) Name is the major gas collected in the syringe. **(1 mark)**

……

……

17. During the manufacture of sodium carbonate in the industry.

(a) Give the name of the process to manufacture sodium carbonate. **(1 mark)**

……

……

(b) Write the final equation to form sodium carbonate during the process. **(1 mark)**

……

……

(c) Give **one** use of sodium carbonate. **(1 mark)**

……

……

18. Describe how to prepare crystal of magnesium sulphate starting with magnesium powder. **(3mks)**

……

……

……

……

……

……

Prefer Calling Amobi Group of Examiners @ 0743 333 000 or 0706 851 439 for Marking Schemes

19.(a) Complete the diagram below to show how dry sample of hydrogen gas is prepared in the la *r.* **(2 marks)**

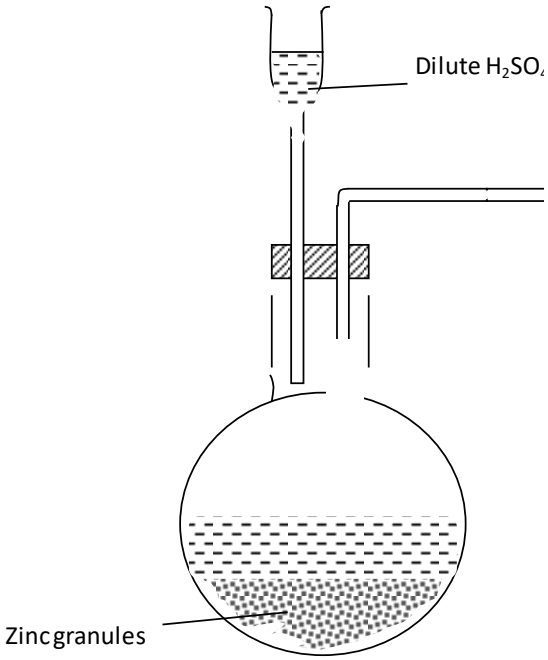

(b) Name the catalyst which could be used to increase the reaction rate of production of hydrogen gas in the set up drawn above. **(1 mark)**

……

……

20. An element consists of two isotopes with atomic masses 59 and 61 in the ratio of 3 : 2 respectively.

(a) What are isotopes? **(1 mark)**

……

……

……

(b) Calculate the relative atomic mass of the element. **(2 marks)**

Prefer Calling Amobi Group of Examiners @ 0743 333 000 or 0706 851 439 for Marking Schemes

21. An element: $^{24}_{12}R$

(a) To which chemical family does it belong? **(1 mark)**

……

……

(b) Write the electron arrangement of the atom. **(1 mark)**

……

……

(c) Draw the structure of its ion. **(1 mark)**

22. If 25cm^3 of 0.1M H_2SO_4 solution neutralized a solution contain 1.06g of sodium carbonate in 250cm^3 of solution, calculate the morality and volume of sodium carbonate solution.

(Na = 23, O = 16, C = 12) ***(3 Marks)***

23. 50cm^3 of oxygen gas diffused through a porous plug in 80 seconds. How long will it take 100cm^3 of sulphur (IV) oxide to diffuse through the same plug? (S = 32, o = 16) ***(3 Marks)***

Prefer Calling Amobi Group of Examiners @ 0743 333 000 or 0706 851 439 for Marking Schemes

24.(a) State the role of the following parts during fractional distillation of a mixture of water and ethanol

(i) Glass beads in the fractionating column ***(1 Mark)***

……

……

(ii) Fractionating column ***(1 Mark)***

……

……

(b) State any one application of fractional distillation ***(1 Mark)***

……

……

……

25.(a) State what is observed when sodium hydroxide pellets are left in air overnight. **(1 mark)**

……

……

……

(b) What name is given the process shown by the salt in (a) above? **(1 mark)**

……

……

……

……

26. Given;

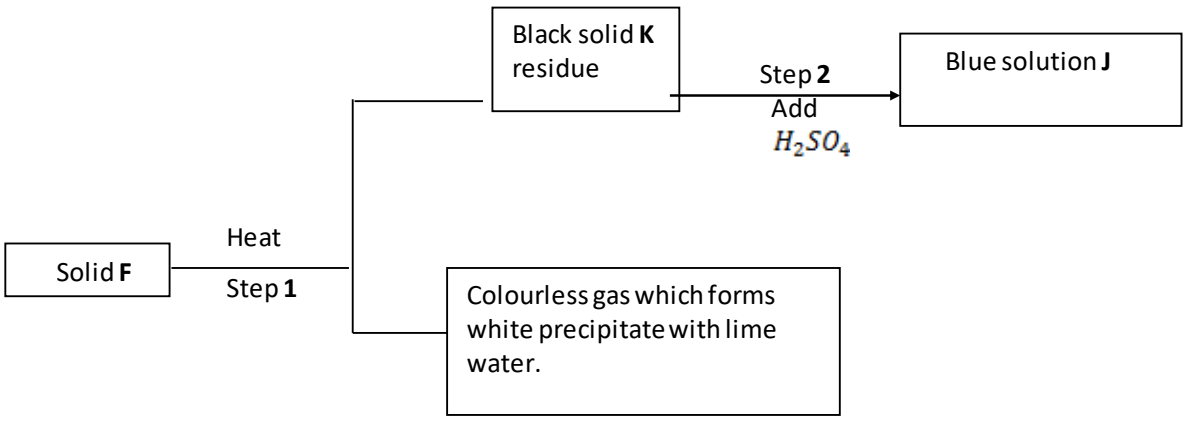

Prefer Calling Amobi Group of Examiners @ 0743 333 000 or 0706 851 439 for Marking Schemes

(a) Identify;

Solid **F** - …… **(1 mark)**

Solid **J** - …… **(1 mark)**

(b) Write equation for step **1**. **(1 mark)**

……

……

27. Use dot (•) and cross (**X**) to show the bonding in Lithium oxide. **(2 mark)**

28. Excess magnesium ribbon was burnt in air to form a white solid mixture. Write two equations to show the formation of the white solid mixture. **(2 marks)**

……

……

……

29. The set-up below shows how gas A was prepared and reacted with heated magnesium

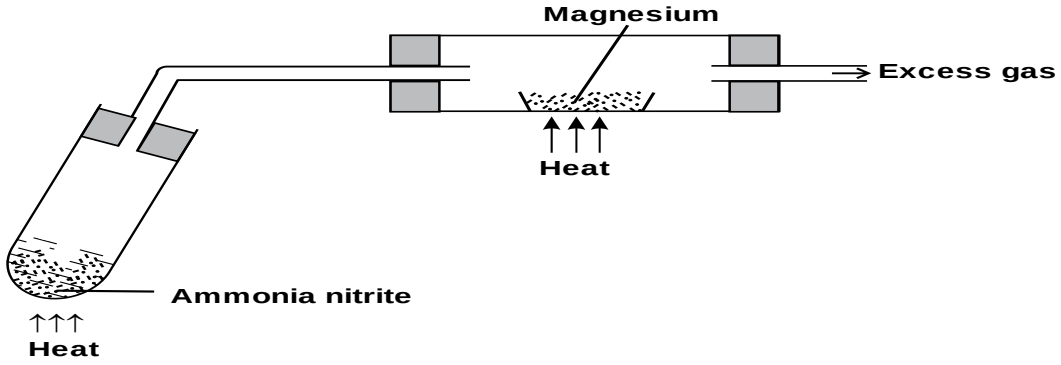

Prefer Calling Amobi Group of Examiners @ 0743 333 000 or 0706 851 439 for Marking Schemes

a) ***Give*** a reason why it is not advisable to heat magnesium before heating ammonium nitrite. **(1mk)**

……

……

……

b) i) ***Identify*** gas A **(1mk)**

……

……

ii) ***Write*** a chemical equation for the reaction between gas ***A*** and magnesium **(1mk)**

……

……

30. Study the set-up below and answer questions that follow.

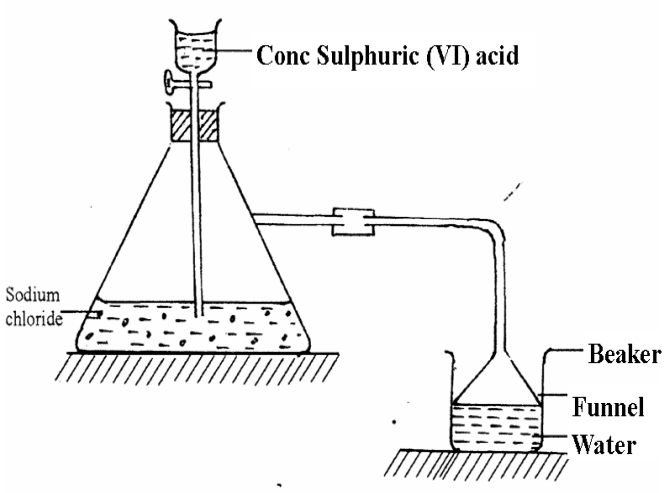

i) Name the gas that is produced when concentrated sulphuric (VI) acid reacts with the sodium chloride **(1 mark)**

……

……

ii) Why is it necessary to use a funnel in the beaker? **(1 mark)**

……

……

iii) How does the gas affect the P^H of the water in the beaker? **(1 mark)**

……

……

……

Prefer Calling Amobi Group of Examiners @ 0743 333 000 or 0706 851 439 for Marking Schemes

BRILLIANT STUDENTS

FORM 3 END TERM 3 SERIES 3 EXAMS

NAME: ……

SCHOOL: ……

ADM NO: …… **SIGN:** …… **DATE:** ……

233/2 CHEMISTRY

PAPER 2 FORM 3

Time: 2 hours

INSTRUCTIONS TO THE CANDIDATES:-

- Write your **name** and admission **number** on the spaces provided.
- Answer ***all*** the questions in the spaces provided.
- Mathematical tables and electronic used calculators may be
- All working **MUST** be clearly shown where necessary.

QUESTION	MAXIMUM SCORE	CANDIDATE'S SCORE
1-30	80	

Prefer Calling Amobi Group of Examiners @ 0743 333 000 or 0706 851 439 for Marking Schemes

1. The figure below represents a section of the periodic table. Study it and answer questions (a) to (h). Note that the letters do not represent the actual symbols of the elements.

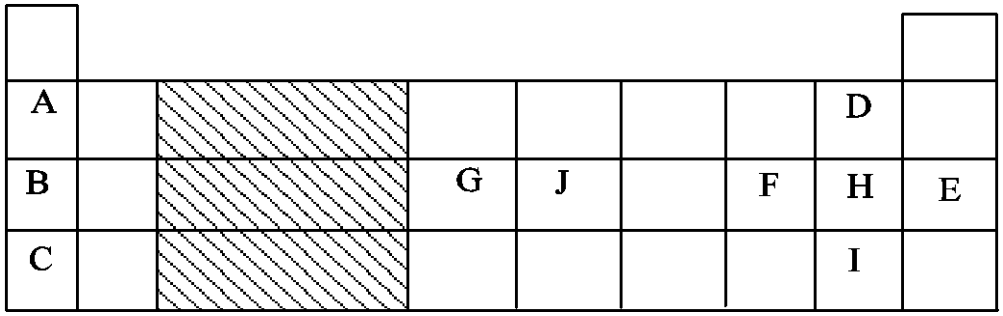

(a) Consider elements D. H and I

i) Give the chemical family of these elements. **(1 mk)**

……

……

ii) How do their ionic size compare. **(1mk)**

……

……

……

iii) Compare and explain the reactivity of the three elements. **(2mks)**

……

……

……

……

……

b) Write the electronic configuration of;

i) Element H **(1mk)**

……

……

ii) The ion of element G. **(1mk)**

……

……

Prefer Calling Amobi Group of Examiners @ 0743 333 000 or 0706 851 439 for Marking Schemes

c) A molecule of one of the elements is shown below. **(2mks)**

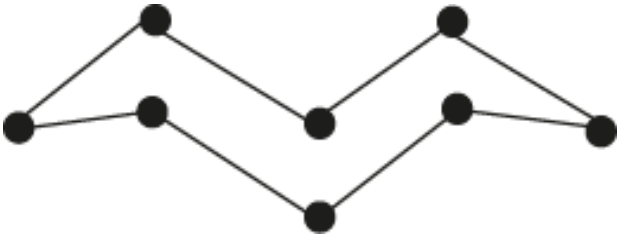

i) Identify this element from the section of the periodic table and give its actual symbol and name. **(2mks)**

……

……

……

ii) Explain why this element has a higher boiling point compared to that of oxygen. **(2mks)**

……

……

……

……

iii) Write an equation to show the reaction between the element named above with oxygen. **(1mk)**

……

……

iv) Predict the pH of the oxide of the above element when in water. Explain. **(2mks)**

……

……

……

……

Prefer Calling Amobi Group of Examiners @ 0743 333 000 or 0706 851 439 for Marking Schemes

2.The flow chart below shows some reactions starting with copper (II) nitrate. Study it and answer questions that follow.

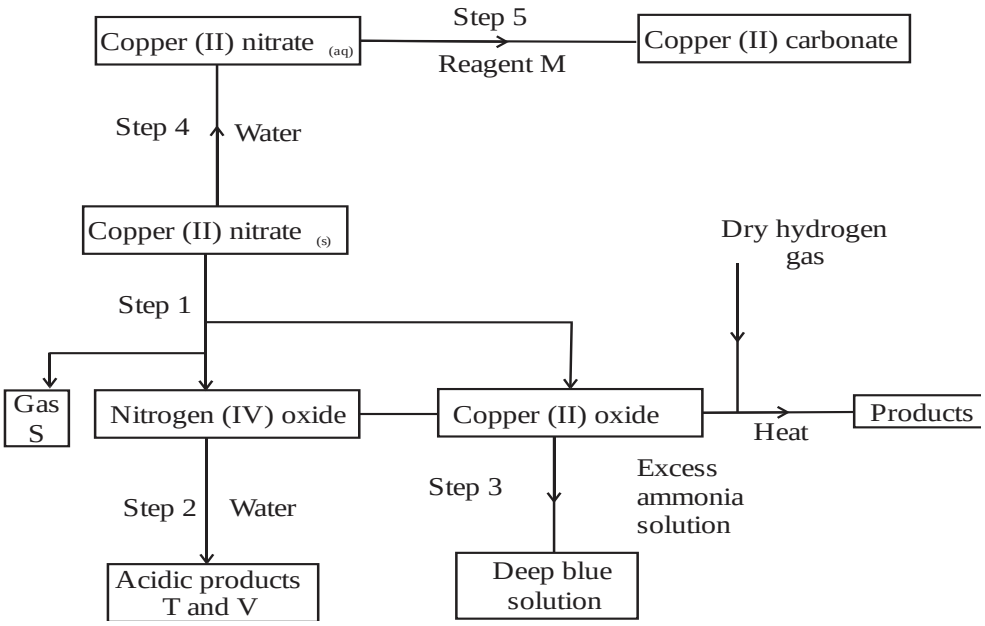

i) State the condition necessary in step 1. **(1mk)**

……

……

ii) Identify: **(4mks)**

Reagent M ……

Gas S ……..

Acidic products **T**……

V……

iii) Write the formula of the complex ion formed in step 3. **(1mk)**

……

……

iv) Write the equations for the reaction in **(2 marks)**

Step 1

……

……

Prefer Calling Amobi Group of Examiners @ 0743 333 000 or 0706 851 439 for Marking Schemes

Step 2

……

……

3.a) The diagram below shows a set up that was used to prepare oxygen gas and passing it over a burning candle. The experiment was allowed to run for some time.

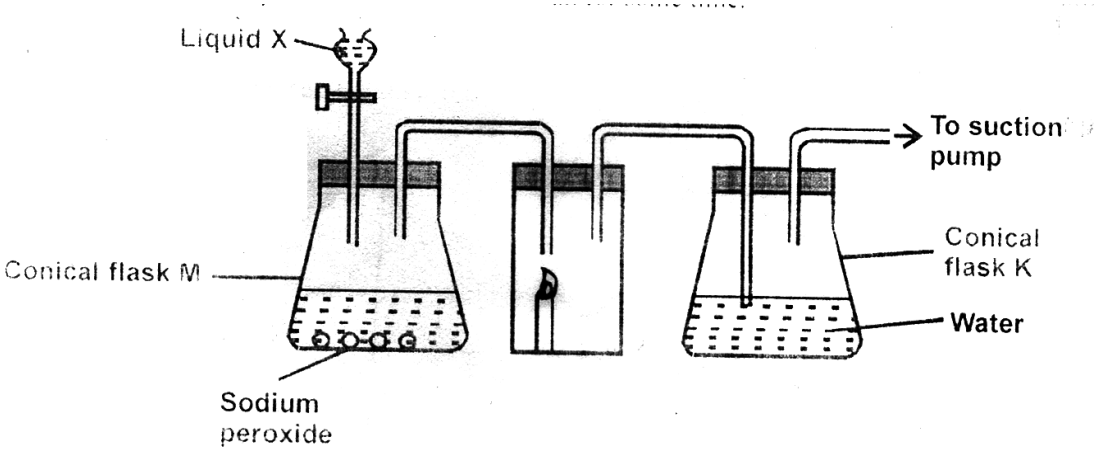

i) Name liquid X **(1mk)**

……

……

ii) Suggest the pH of the solution in conical flask K. Explain **(2mks)**

……

……

……

……

iii) Write an equation for the reaction taking place in the conical flask M. **(1mk)**

……

……

b) State and explain the two observations made when hydrogen sulphide is bubbled into the solution containing iron (III) chloride. **(2mks)**

……

……

……

Prefer Calling Amobi Group of Examiners @ 0743 333 000 or 0706 851 439 for Marking Schemes

……

……

……

c)i) Describe a simple chemical test that can be used to distinguish between carbon (IV) oxide and carbon (II) oxide gases. **(3mks)**

……

……

……

……

……

ii) Give one use of carbon (II) oxide. **(1mk)**

……

……

d) A form two student inverted a gas jar full of carbon (IV) oxide over water and sodium hydroxide solution as shown below.

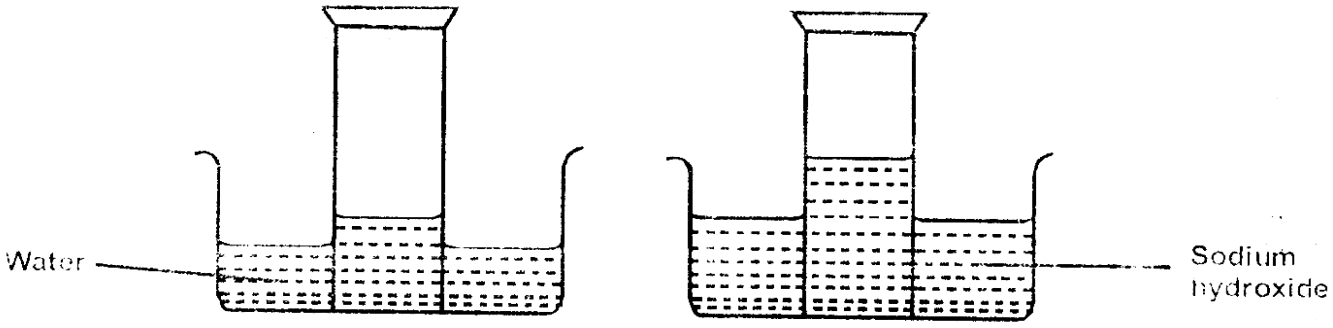

Explain the observations made. **(2mks)**

……

……

……

……

Prefer Calling Amobi Group of Examiners @ 0743 333 000 or 0706 851 439 for Marking Schemes

4.(a) Name the **two** crystalline forms of sulphur **(1 Mark)**

……

……

(b) The scheme below represents the steps followed in the contact process. Study it and answer the questions that follow:-

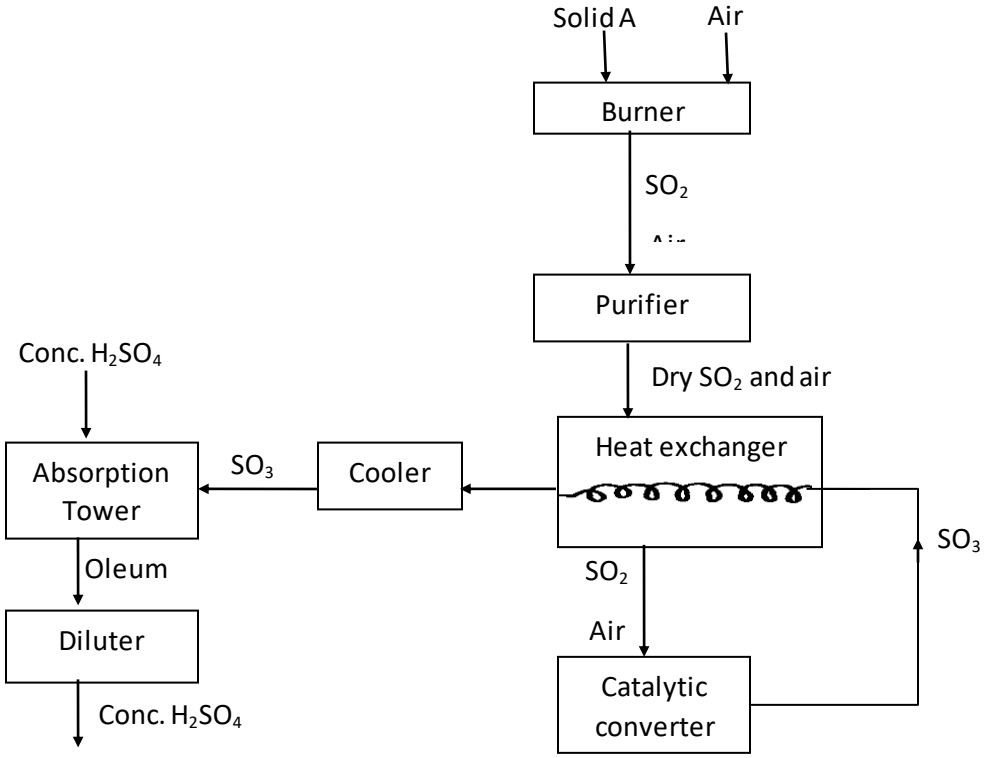

(i) Name **one** impurity removed by the purifier. **(1 mark)**

……

……

(ii) Why is it necessary to remove impurities? **(1 mark)**

……

……

……

(iii) Write down the equation of the reaction taking place in the converter **(1 mark)**

……

……

Prefer Calling Amobi Group of Examiners @ 0743 333 000 or 0706 851 439 for Marking Schemes

(iv) Name the **two** catalysts that can be used in the converter **(2 marks)**

……

……

……

(v) What is the function of heat exchanger? **(1 mark)**

……

……

(vi) Sulphuric (VI) Oxide is not dissolved directly into water? Explain **(1 mark)**

……

……

……

(vii) (I) Name the main pollutant in the contact process. **(1 mark)**

……

……

(II) How can the pollution in **(g) (I)** above be controlled? **(1 mark)**

……

……

……

(vii) Give **one** use of sulphuric (VI) acid **(1 mark)**

……

……

5. The flow chart below shows industrial manufacture of sodium carbonate.
Study it and answer the questions that follow.

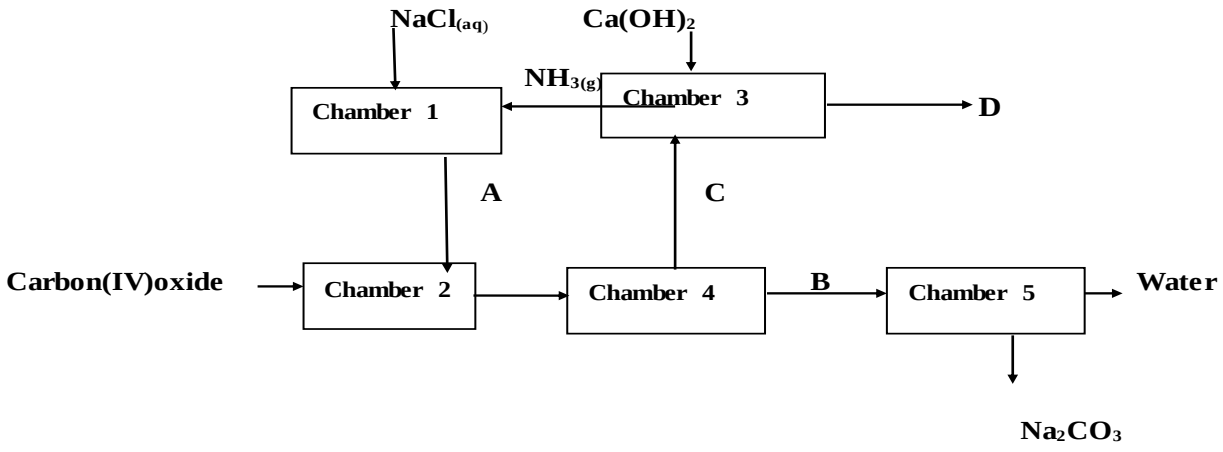

Prefer Calling Amobi Group of Examiners @ 0743 333 000 or 0706 851 439 for Marking Schemes

(a) Name substances **A**, **B**, **C** and **D**. **(4mks)**

A_____

B_____

C_____

D_____

(b) Write equation for the reactions taking place in chamber 3 and 5. **(2mks)**

Chamber 3

……

……

Chamber 5

……

……

(c) Name the physical process in chamber 4 and 5. **(2mks)**

Chamber 4

……

……

Chamber 5

……

……

(d) Name **one** source of cheap carbon (IV) oxide for Solvay process. **(1mk)**

……

……

……

Prefer Calling Amobi Group of Examiners @ 0743 333 000 or 0706 851 439 for Marking Schemes

6.a) A student set up the apparatus as shown in the diagram below to prepare and collect dry ammonia gas.

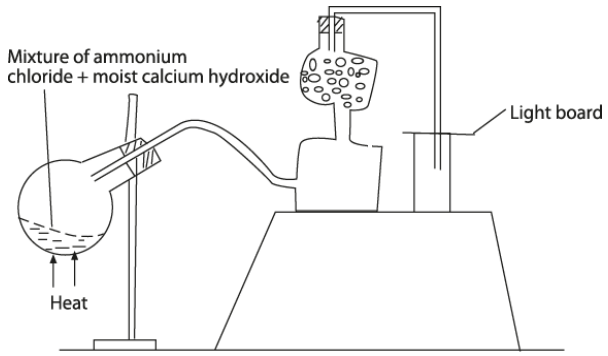

i) Identify **three** mistakes in the set up and give a reason why each is mistake. **(3mks)**

……

……

……

……

ii) Name a suitable drying agent for ammonia. **(1mk)**

……

……

iii) Write an equation for the reaction that occurred when a mixture of ammonium chloride and calcium hydroxide was heated. **(1mk)**

……

……

iv) Describe one chemical test for ammonia gas. **(1mk)**

……

……

……

b) Ammonia gas is used to manufacture nitric (V) acid as shown below.

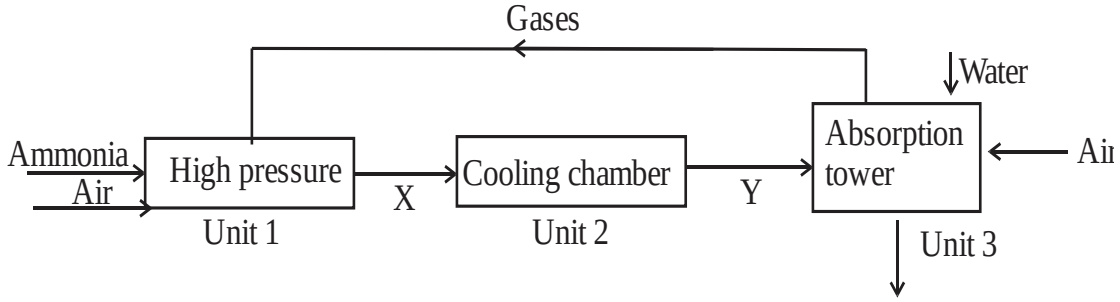

Prefer Calling Amobi Group of Examiners @ 0743 333 000 or 0706 851 439 for Marking Schemes

i) This process requires the use of a catalyst. In which unit is the catalyst used? **(1mk)**

……

……

ii) Identify compound X and Y. **(2mks)**

……

……

……

……

iii) Ammonia reacts with nitric (v) acid to form ammonium nitrate fertilizer. Calculate the percentage composition of nitrogen in ammonium nitrate. (N = 14, O = 16, H = 1) **(3 marks)**

7. a) ***State*** Graham's Law. **(2mks)**

……

……

……

……

b) The table below shows the relationship between the pressure and volume of a fixed mass of ozone gas.

Pressure (K pa)	1	4	8	16	20	160
Volume (cm^3)	140	40	20	10	8	1
Inverse of volume 1/v (cm^{-3})						

i) Complete the table by filling the inverse of volume. **(3mks)**

ii) ***Draw*** a graph of pressure against the reciprocal (*inverse*) of volume. **(4mks)**

Prefer Calling Amobi Group of Examiners @ 0743 333 000 or 0706 851 439 for Marking Schemes

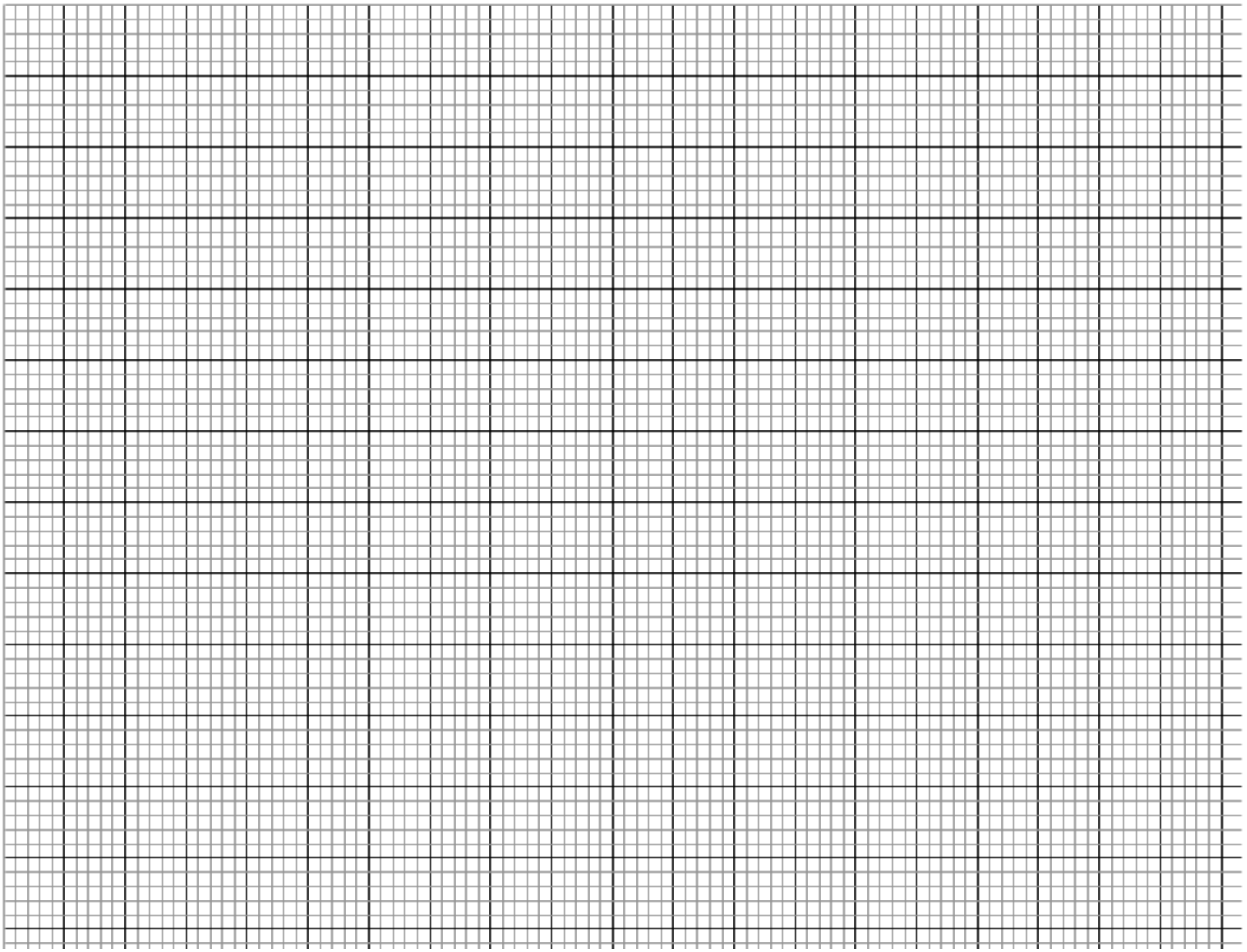

(c) Using the graph, ***determine*** the volume of ozone if pressure is 12Kpa. **(3mks)**

Prefer Calling Amobi Group of Examiners @ 0743 333 000 or 0706 851 439 for Marking Schemes

BRILLIANT STUDENTS

FORM 3 END TERM 3 SERIES 3 EXAMS

NAME: ……

SCHOOL: ……

ADM NO: …… **SIGN:** …… **DATE:** ……

233/3

CHEMISTRY

PAPER 3 FORM 3

(PRACTICAL)

2 ¼ HRS

FORM THREE CHEMISTRY PAPER 3 TERM 3

INSTRUCTIONS TO CANDIDATES

a) Answer all the questions in the spaces provided in the question paper.

b) You are NOT allowed to start working with the apparatus for the first 15 minutes of the 2 ¼ hours allowed for this paper. This time is to enable you to read the question paper and make sure you have all the chemicals and apparatus that you may need.

c) All working must be clearly shown.

FOR EXAMINER'S USE ONLY

QUESTION	MAXIMUM SCORE	CANDIDATE'S SCORE
1	16	
2	14	
3	10	
TOTAL SCORE	**40**	

Prefer Calling Amobi Group of Examiners @ 0743 333 000 or 0706 851 439 for Marking Schemes

1. You are provided with:

- 0.2 M Sodium Hydroxide solution
- X M hydrochloric acid solution X
- Y M Na_2CO_3 solution Y

You are required to standardize hydrochloric acid and hence determine the concentration of sodium carbonate.

PROCEDURE I

Using a pipette transfer 25cm^3 of 0.2M Sodium hydroxide into a conical flask. Add 2-3 drops of phenolphthalein indicator and then titrate with hydrochloric acid provided in a beaker from a burette. Shake the conical flask after each addition and note the volume required to neutralize the sodium hydroxide solution. Record your results in the table below. **(3 mks)**

Titre	I	II	III
Final burette reading (cm^3)			
Initial burette reading (cm^3)			
Volume of X used (cm^3)			

a) What is the average volume of solution X used? **(1 mk)**

b) Calculate the number of moles of solution X required to completely neutralize 25cm^3 of sodium hydroxide solution. **(2 mks)**

Prefer Calling Amobi Group of Examiners @ 0743 333 000 or 0706 851 439 for Marking Schemes

c) What is the morality of the hydrochloric acid, solution X? **(2 mks)**

PROCEDURE II

Rinse the pipette thoroughly then pipette 25cm^3 of sodium carbonate into a conical flask. Add 2-3 drops of phenolphthalein indicator. Refill the burette with hydrochloric acid and use it to titrate the contents of the conical flask. Shake the flask after each addition of the acid and note the volume of the acid required to neutralize 25cm^3 of the sodium carbonate. Record your results in the table below. **(3 mks)**

Titre	I	II	III
Final burette reading (cm^3)			
Initial burette reading (cm^3)			
Volume of X used (cm^3)			

d) What is the average volume of hydrochloric acid used in the second procedure? **(1 mk)**

e) Calculate the number of moles of sodium carbonate in 25cm^3 of solution. **(2 mks)**

f) Calculate the concentration of sodium carbonate in moles per litre. **(2 mks)**

Prefer Calling Amobi Group of Examiners @ 0743 333 000 or 0706 851 439 for Marking Schemes

2. You are provided with solid A. Carry out the tests below. Identify any gas or gases produced and record your observations and inferences.

a) Heat gently a spatula endful of solid A in a dry test tube. Test the gas with red and blue litmus paper.

Observations	**Inferences**
(2 mk)	**(2 mk)**

b) Place a spatula endful of solid A in a boiling tube. Add 10cm^3 of distilled water. Filter off the residue. Divide the filtrate into two portions. Retain the residue.

(i) To the first portion add 3 drops of ammonia solution and then excess.

Observations	**Inferences**
(1 mk)	**(1 mk)**

(ii) To the second portion add 3 drops of Lead (ii) nitrate solution.

Observations	**Inferences**
(1 mk)	**(1 mk)**

c) To the residue obtained in (b) above add 5cm^3 of dilute nitric acid. Divide the solution into two portions.

Observations	**Inferences**
(1 mk)	**(1 mk)**

Prefer Calling Amobi Group of Examiners @ 0743 333 000 or 0706 851 439 for Marking Schemes

(i) To the first portion add 3 drops of Ammonia solution and then excess.

Observations	Inferences
(1 mk)	**(1 mk)**

(ii) To the second portion add 3 drops of lead (ii) nitrate solution.

Observations	Inferences
(1 mk)	**(1 mk)**

3. You are provided with solid M. carry out the tests below and record your observations and inferences in the spaces provided.

a) i. Place a half spatula of solid M in a non-luminous flame of a Bunsen burner.

Observations	Inferences
(1 mk)	**(1 mk)**

(b) Place the remaining solid M in a boiling tube and add $8cm^3$ of water. Divide the solution into 4 portions.

(i) Place the remaining solid **M** in a boiling tube and add $8cm^3$ of water.

Observations	Inferences
(1/2 mk)	**(1/2 mk)**

ii. To the first portion, add 3 drops of acidified potassium manganate(vii)

Observations	Inferences
(1 mk)	**(1 mk)**

Prefer Calling Amobi Group of Examiners @ 0743 333 000 or 0706 851 439 for Marking Schemes

iii. To the second portion, add 3 drops of acidified potassium dichromate (vi) and warm.

Observations	Inferences
(1 mk)	**(1 mk)**

iv. To the third portion, add a little sodium hydrogen carbonate.

Observations	Inferences
(1/2 mk)	**(1/2 mk)**

v. To the fourth portion, add 3 drops of universal indicator and determine the PH of the solution.

Observations	Inferences
(1 mk)	**(1 mk)**

Prefer Calling Amobi Group of Examiners @ 0743 333 000 or 0706 851 439 for Marking Schemes

BRILLIANT STUDENTS

FORM 3 END TERM 3 SERIES 3 EXAMS

NAME: ……

SCHOOL: ……

ADM NO: …… **SIGN:** …… **DATE:** ……

COMPUTER STUDIES

FORM THREE END OF TERM 3

1. State the two functions of the control unit. **(2 marks)**

……

……

……

……

2. Explain four reasons which make microcomputers suitable for personal computing work. **(2 marks)**

……

……

……

……

3. State the functions of the following keyboard key combinations. **(3mks)**

a) CTRL + ESC:

……

……

b) ALT + F4:

……

……

c) CTRL + ALT + DEL:

……

……

Prefer Calling Amobi Group of Examiners @ 0743 333 000 or 0706 851 439 for Marking Schemes

4. Mambo Leo the CEO of Chai tea factory wishes to computerise activities in the factory. He asked his system analyst to advise him on the areas that needed to be computerised. State three reasons why an organisation may opt to develop a new information system. **(3mks)**

……

……

……

……

……

5. a) Give a reason for enforcing referential integrity. **(1mk)**

……

……

……

b) List two main characteristics of a primary key. **(2mks)**

……

……

……

……

6. List any four types of computer crimes. **(2mks)**

……

……

……

……

……

……

7. Most supermarkets use bar codes extensively, explain two reasons why this is the case. **(2mks)**

……

……

……

……

……

……

Prefer Calling Amobi Group of Examiners @ 0743 333 000 or 0706 851 439 for Marking Schemes

7. List any two examples of publications designed using DTP software. **(1mk)**

……

……

……

……

8.a) Explain how a computer system can be protected from intruders. **(2mks)**

……

……

……

……

b) State any two laws governing protection of information. **(2mks)**

……

……

……

……

9.a) What is the meaning of graphics as used in word processing? **(1mk)**

……

……

……

b) Give two sources of graphics in the computer. **(2mks)**

……

……

……

……

10. State the cursor action when the following keyboard keys are pressed. **(4mks)**

i. Delete key

……

……

ii. Insert key

……

……

Prefer Calling Amobi Group of Examiners @ 0743 333 000 or 0706 851 439 for Marking Schemes

iii. Pgup (page up) key

……

……

iv. Pgdn (page down) key

……

……

11. a) What is a search engine? **(1mk).**

……

……

……

b) Give four examples of search engines you know. **(2mks)**

……

……

……

……

……

……

12. a) Define the following terms as used in a worksheet. **(2mks)**

i) Columns

……

……

ii) Rows

……

……

b) Distinguish between absolute cell reference and relative cell reference **(2mks)**

Relative Referencing

……

……

Absolute referencing;

……

……

Prefer Calling Amobi Group of Examiners @ 0743 333 000 or 0706 851 439 for Marking Schemes

13. a) State two data processing file. **(1mk)**

……

……

……

b) Explain any one file named above in a). **(2mks)**

……

……

……

……

15. Give one reason to the growth of communication industry in Kenya. **(1mk)**

……

……

……

16. (a) (i) Outline chronologically the 6 stages of program development life cycle. **(6mks)**

……

……

……

……

……

……

……

……

b) State and explain the 2 main errors made during program development. **(2mks)**

……

……

……

……

Prefer Calling Amobi Group of Examiners @ 0743 333 000 or 0706 851 439 for Marking Schemes

C) Study the pseudo-code below and draw a flowchart from it. **(7mks)**

START

PRINT ENTER CAR NUMBER

INPUT CAR NUMBER

PRINT ENTER NUMBER OF DAYS

INPUT NUMBER OF DAYS

IF NUMBEROFDAYS>=7 THEN

*AMOUNT=(NUMBER OF DAYS X 2500) – (NUMBER OF DAYS X 2500) * 25%*

ELSE

*AMOUNT=NUMBER OF DAYS * 2500*

END IF

DISPLAY CAR NUMBER, NUMBER OF DAYS, AMOUNT

STOP

Prefer Calling Amobi Group of Examiners @ 0743 333 000 or 0706 851 439 for Marking Schemes

17. a) Explain three parameters that determines the magnitude of a number . **(6mks)**

……

……

……

……

……

……

……

……

b) Using two's complement, show how the arithmetic below would be carried out on a 8 - bit computer system.

(+54) - (+29) **(5mks)**

……

……

……

……

……

……

……

……

c) State and explain any two strategies that may be employed to mitigate threats to data integrity. **(4mks)**

……

……

……

……

……

……

18. a) What is the meaning of integrated software? **(2mks)**

……

……

……

……

Prefer Calling Amobi Group of Examiners @ 0743 333 000 or 0706 851 439 for Marking Schemes

b) State and explain three advantages of using robots to perform tasks. **(6mks)**

……

……

……

……

……

……

……

……

c) Differentiate between toggle keys and home row of the keyboard giving examples: **(4mks)**

……

……

……

……

……

……

d) What is proofreading? Give an example of proofreading tools used in word processors. **(3mks)**

……

……

……

……

……

19. a) Distinguish between a computer drive and computer driver. **(2mks)**

……

……

……

……

b. State any four factors to consider when selecting an operating system. **(4mks)**

……

……

……

Prefer Calling Amobi Group of Examiners @ 0743 333 000 or 0706 851 439 for Marking Schemes

……

……

……

……

……

c) Explain any four factors that dictate how the operating system organizes data in a computer. ***(4mks)***

……

……

……

……

……

……

d) Define the term file in relation to the operating system. **(2mks)**

……

……

……

……

e) The operating system stores details of a file for easy identification and retrieval of files. Explain any three file details the operating system uses to search and identify a file**. (3mks)**

……

……

……

……

……

……

Prefer Calling Amobi Group of Examiners @ 0743 333 000 or 0706 851 439 for Marking Schemes

BRILLIANT STUDENTS

FORM 3 END TERM 3 SERIES 3 EXAMS

NAME: ……

SCHOOL: ……

ADM NO: …… **SIGN:** …… **DATE:** ……

COMPUTER STUDIES PAPER 2 QUESTION PAPER

QUESTION 1 (50 Marks)

1.The information below was extracted from CMC vehicle selling business

Buyer Name	Buyer Address	Buyer Town	Vehicle Reg NO	Vehicle Type	Vehicle Make	Vehicle price	Buyer Number	Amount paid
peter	254	Nakuru	KAJ 001	Matatu	Nissan	1200000	B001	800000
john	678	Eldoret	KAJ 002	Bus	Mazda	2400000	B002	2000000
Ken	963	Nairobi	KAJ 003	Saloon	Toyota	800000	B003	600000
Peter	147	Nakuru	KAJ 004	Pick up	Peugeot	1000000	B004	700000
Roy	456	Bungoma	KAJ 005	Lorry	Isuzu	3000000	B005	2000000
Glen	789	Webuye	KAJ 006	Pick up	Toyota	1800000	B006	1600000
John	678	Eldoret	KAJ 007	Bus	Scania	7500000	B002	7500000
Ken	963	Nairobi	KAJ 008	Matatu	Toyota	1300000	B003	1300000
Phillip	159	Kisumu	KAJ 009	Saloon	Nissan	900000	B007	900000
Peter	254	Nakuru	KAJ 010	Pick up	Isuzu	1500000	B001	1200000
Ken	357	Kisumu	KAJ 011	Saloon	Peugeot	700000	B008	700000
Glen	789	Webuye	KAJ 012	Bus	Isuzu	10000000	B006	9500000
Peter	147	Nakuru	KAJ 013	Matatu	Nissan	2700000	B004	2700000

a) Create a database file named CMC **(2 marks)**

b) Using the information in the table, create a table to hold vehicle detail and another to hold buyer details. Name them tbl vehicle and tbl buyer respectively **(4 marks)**

c) Enforce referential integrity between two tables. **(2 marks)**

d) Create different input screen for each table, giving them appropriate title. Name themfrm vehicle and frm buyer. Use them to enter data into the tables. **(12 marks)**

e) Display a report only showing the details of the buyers who have cleared paying for the vehicle. Name the report rpt cleared with ''CLEARED BUYERS'' as the title of the report. **(10 marks)**

Prefer Calling Amobi Group of Examiners @ 0743 333 000 or 0706 851 439 for Marking Schemes

f) Using the two tables create an outlined report showing the customer details, the total amount paid by each customer and the total amount received by CMC during this time. Name the report rptnilbal and the title as 'SUMMARY REPORT PER BUYER.'' **(8 marks)**

g) Create a query to display the vehicle details with balances of less than 500,000 but not less than 300,000. Name the query as qrymidbal. **(7marks)**

h) Create a report showing the vehicle type, the total sales for each type and the grand total. **(3 marks)**

i) Print tblvehicle, tblbuyer, rptcleared, and rptnilbal and qrymidbal landscape orientation with footers being your last name and index number at the centre of the page. **(2 marks).**

QUESTION 2 (50 Marks)

2.Use a spreadsheet to manipulate data in the table below.

Adm. NO	Name	Stream	Comp	Art	Bus	Eng	Mat	STUDENT MEAN	RANK
C001	Barasa	H	56	45	36	56	26		
C002	Wangila	K	58	57	90	54	23		
C003	Wafula	H	48	56	54	45	25		
C004	Wanjala	K	78	95	78	46	24		
C005	Kerubo	H	49	86	68	35	52		
C006	Akinyi	K	56	45	25	63	54		
C007	Odhiambo	H	75	78	45	65	56		
C008	Okunyuku	K	89	69	65	53	51		
C009	Nekesa	H	69	58	45	54	52		
C010	Simiyu	H	85	46	78	52	53		
	TOTAL								
	TOTAL	FOR H							
	TOTAL	FOR K							

a) Enter the data in all bordered worksheet and auto fit all columns. Save the workbook as mark1 **(15 mks)**

b) Find the total marks for each subject **(3 mks)**

c) Find total for each subject per stream using a function. **(5 mks)**

d) Find mean mark for each student using a function **(5 mks)**

e) Rank every student in descending order using the mean **(5 mks)**

f) Create a well labeled colum chart on a different sheet to show the mean mark of every student. Save the workbook as mark2. **(7 mks)**

g) Using mark1, use subtotals to find the average mark for each subject per stream. Save the workbook as mark3 **(7 mks)**

h) Print mark1, mark2, and the chart **(3 mks)**

Prefer Calling Amobi Group of Examiners @ 0743 333 000 or 0706 851 439 for Marking Schemes

BRILLIANT STUDENTS

FORM 3 END TERM 3 SERIES 3 EXAMS

NAME: ……..

SCHOOL: ……...

ADM NO: …… **SIGN:** …… **DATE:** ……...

C.R.E. PAPER 1

FORM THREE

TIME 2 ½ HRS.

INSTRUCTIONS: Answer Any Five Questions.

1. **a)** With reference to the accounts of creation in Genesis 1 and 2 identify eight attributes of God. **(8 marks)**
   b) Outline the responsibilities given to human beings by God in the Genesis stories of creation **(6 marks)**
   c) Identify reasons why man is a special creature to God. **(6 marks)**

2 **a)** Describe ways in which Moses showed his obedience to God. **(7 marks)**
   b) State six instructions given to Abraham concerning circumcision. **(6 marks)**
   c) Identify seven importance's of covenants in modern life. **(7 marks)**

3 **a)** Give seven circumstances that led to the spread of idolatry in Israel. **(7 marks)**
   b) Why did Elijah face danger and hostility as a prophet of God? **(7 marks)**
   c) Highlight six lessons that Christian can learn about social justice from the story of Naboth's vineyard. **(6 marks)**

4 **a)** How were the prophetic messages written? **(6 marks)**
   b) State eight teachings of Amos on the Lord's Day. **(8 marks)**
   c) What lessons do Christians learn from Amos' message on judgment? **(6 marks)**

5 **a)** Describe the fall of Jerusalem during the time of Jeremiah. **(8marks)**
   b) Mention the content of Jeremiah's message in his pastoral letter to the exiles. **(6 marks)**
   c) Give the relevance of Jeremiah's Temple Sermon to Christian today. **(6 marks)**

6 **a)** State seven reasons why initiation is important in traditional African community **(7 marks)**
   b) Explain the traditional African concept of life. **(7 marks)**
   c) State ways in which the government in Kenya minimizes problems related to land. **(6 marks)**

Prefer Calling Amobi Group of Examiners @ 0743 333 000 or 0706 851 439 for Marking Schemes

BRILLIANT STUDENTS

FORM 3 END TERM 3 SERIES 3 EXAMS

NAME: ……

SCHOOL: ……..

ADM NO: …… SIGN: …… DATE: ……...

C.R.E PAPER 2

2 ½ HRS

END OF TERM 3 EXAMINATIONS

INSTRUCTIONS.

Answer any five questions,

1a.) Explain the Jewish expectations concerning the Messiah. **(7mks)**
b.) Give seven similarities in the annunciation of the birth of John the Baptist and that of Jesus Christ **(7mks)**
c.) State ways in which Christians play the role of the Baptist **(6mks)**

2a) What does Christian learn about Jesus from the incident when he was baptized **(6mks)**
b.) Describe the temptation of Jesus in the wilderness Luke4:1-13 **(7mks)**
c.) Outline seven lessons Christians learn from the temptation of Jesus **(7mks)**

3a.) Describe the triumphant entry of Jesus into Jerusalem Lk19:28-40 **(8mks)**
b.) Outline six teachings of Jesus on prayer **(6mks)**
c.) Why do some Christians feel it difficult to prayer **(6mks)**

4. a) State six characteristics of love according to St. Paul in 1cor13 **(6mks)**
b) Explain four ways in which the unity of believers is expressed in the image of the bride **(8mks)**
c) Identify six roles of the Holy Spirit in the church today. **(6mks)**

5a) Identify the gifts of the holy spirit according to St Paul 1st Corinthians 12; 7-12 **(7mks)**
b) How was the life of peter transformed on the day of Pentecost **(6mks)**
c).State ways in which the gifts of the Holy Spirit are abused in church today **(6mks)**

6a) Identify four teachings of St Paul on the similarities between the church and husband wife Relationship. **(8mks)**
b) Give ways in which Christians prevent division in church today **(7mks)**
c) State five ways in which Christians are able to identify those who posses the gifts of the Holy Spirit **(5mks)**

Prefer Calling Amobi Group of Examiners @ 0743 333 000 or 0706 851 439 for Marking Schemes

BRILLIANT STUDENTS

FORM 3 END TERM 3 SERIES 3 EXAMS

NAME: ……..

SCHOOL: ……...

ADM NO: …… **SIGN:** …… **DATE:** ……...

101/1

ENGLISH PAPER 1

(FUNCTIONAL SKILLS)

FORM THREE

TIME 2 HOURS

END OF TERM 3 EXAMINATIONS

INSTRUCTIONS:

Answer all the questions in the spaces provided.

1. FUNCTIONAL WRITING **(20 MARKS)**

Applications are invited from interested and competent candidates to join Joyland Production, a music production company, as a music producer.

The interested candidates must be:

- Kenyan citizens
- Aged between 18-25 years
- Creative
- Self-driven
- Able to meet tight deadlines.

Applications should be addressed to:

The Human Resource Manager

Dreamland Production

P. O. Box 14080- 20100

Nakuru.

Write an application letter that would enable you to clinch the job. **(20 marks)**

Prefer Calling Amobi Group of Examiners @ 0743 333 000 or 0706 851 439 for Marking Schemes

2. CLOZE TEST: (10 MARKS)

Read the passage below and fill in the blank spaces with the most appropriate word.

It was not until the second half of this century that the rights of the child became of international concern. (1) _____, children were generally classed (2)_____ that group of persons who were under a legal disability, (3) _____women, idiots and lunatics. (4) _____ the industrial revolution in Europe, children (5) _____ used as labourers. (6) _____, during the wake of the women's rights movement in _____ late 19th century in Europe and America, children's rights issues created an awareness. In recent (8) _____, children's rights are no longer (9) _____ together with women's rights and are now (10) _____their own place in the law; there has been a shift that has accorded children a special place in the law.

3. ORAL SKILLS (30 MARKS)

Read the following oral poem and answer the questions that follow.

ESCAPE FROM THE CITY

I seek a quiet country life
Without the city's burstling strife
I seek the sight of trees ablaze
Instead of streets that form amaze

Barbara Klinger

QUESTIONS:

(i) Describe the rhyme scheme of the above poem. **(2 mks)**

……

……

……

……

(ii) Identify two mnemonic devices in this poem and state their effectiveness. **(4 mks)**

……

……

……

Prefer Calling Amobi Group of Examiners @ 0743 333 000 or 0706 851 439 for Marking Schemes

……

……

……

(iii) Which words would you stress in line 3 and why? . **(2 mks)**

……

……

……

……

(iv) How would you say the first line of this poem and why? **(2 mks)**

……

……

……

……

(v) Write two sentences; one with the word form as a noun and another as a verb. **(2mks)**

……

……

……

……

(b) <u>Underline the word in which the vowel sound is different in the following sets of words.</u> **(4 mks)**

(i) ship sheep sleep

(ii) pull pool book

(iii) bark park buck

(iv) barn ban bag

(c) <u>State whether the stress would fall on the first or second syllable on the word in bold by underlining.</u> (4 mks)

(i) I don't like associating with that **rebel**.

……

……

Prefer Calling Amobi Group of Examiners @ 0743 333 000 or 0706 851 439 for Marking Schemes

(ii) Mary has a lot of **respect** for her elders.

……

……

(iii) I will give you my **contact** address today.

……

……

(iv) You can **access** the house through the back door.

……

……

(d) <u>Underline the silent letters in the following words.</u> **(4 mks)**

(i) subtle

(ii) comb

(iii) white

(iv) hymn

(e) For each of the words below, provide another word with the same pronunciation. **(4 mks)**

(i) Profit –

(ii) mete –

(iii) dough –

(iv) key –

(f) <u>Read the genre and answer the questions that follow.</u>

How high up has he heaved his heavy hoe?

(i) Identify the genre above. **(1 mk)**

……

……

(ii) Mention one characteristic of the above genre. **(1 mk)**

……

……

Prefer Calling Amobi Group of Examiners @ 0743 333 000 or 0706 851 439 for Marking Schemes

BRILLIANT STUDENTS

FORM 3 END TERM 3 SERIES 3 EXAMS

NAME: ……

SCHOOL: ……

ADM NO: …… **SIGN:** …… **DATE:** ……

101/2

ENGLISH

FORM THRE

(Comprehension, Literary appreciation and grammar)

TIME: 2 ½ HOURS

END OF TERM 3 EXAMINATIONS

INSTRUCTIONS:

Answer all the questions in the spaces provided.

1. COMPREHENSION.

Read the passage below and answer the questions that follow after it:

Those who have never travelled by air imagine that it is an interesting experience. It is, in some ways, but I would like to show some of the disadvantages. When travelling long distances, one disadvantage is the close proximity of your travelling companions. At least in a crowded train you can get up on the pretext of going to stretch your legs in the corridor, which gives you an opportunity to see if there is a vacant seat with less offensive passengers in another compartment, or, if the worst comes to the worst, you can spend the greater part of the journey in the buffet car eating tired sandwiches and drinking a brown liquid referred to as coffee out of paper cup. You may not enjoy it but it may well be the lesser of the two evils.

Not so on the plane. Inevitably, you find yourself wedged in the middle of a row seating many people. How some unfortunate travellers manage to get the isle or window seats. I have never been able to discover, since they do not look significantly different from anyone else. Perhaps it is done by shameless lying: Excuse me, stewardess, but I

Prefer Calling Amobi Group of Examiners @ 0743 333 000 or 0706 851 439 for Marking Schemes

must get a seat next to the window as I am recovering from a spinal operation, or I am afraid unless I sit by window, I will get sick and mess up everybody. All I know is, I have never been able to invent a convincing reason. So, there I am, wedged next to the fattest man on the plane on one side, and the most fidgety child on the other. No room to stretch my legs, barely room to fasten my seat belt, nowhere to rest my arms – in other words, I am sitting „encaged like a sausage, constantly squeezed and trampled over by other members of my row trying desperately to reach the aisle or get a view from the window. And when it is time for food, it is even worse. Either the fat man gets my tray as well as his own, or the child, displaying a well-timed fit of temper, sends my meat nearly flying in all directions.

Time and space will not allow me to tell you about other miseries. But do you know? The stewardess could address you in a strange tongue and become impatient when you fail to respond. The food could he strange and unpalatable…….. and you never quite forget that should something happen you would meet your maker without any delay whatsoever. Well, man's conquests of the air may be his most outstanding achievement to date, but as far as I am concerned, it's an international disaster.

a) In your own words, say why travelling by air is not a pleasant thing. Use the information given in the first three sentences of the passage. **(2 marks)**

……

……

……

……

b) According to the passage why is it better to travel on a crowded train than on a crowded plane? **(3 mks)**

……

……

……

……

……

c) What is implied by the food served in a train? Illustrate your answer. **(2 marks)**

……

……

……

……

Prefer Calling Amobi Group of Examiners @ 0743 333 000 or 0706 851 439 for Marking Schemes

d) The writer points out that he has been unable to invent a convincing reason so as to be excused to occupy the window seat. What reason does he give to support this claim? **(2 marks)**

……

……

……

……

e) In **point form**, write the reasons why the writer envies those who get the aisle or window seats. **(4marks)**

……

……

……

……

……

……

f. What does the expression encaged like a sausage mean? **(2 marks)**

……

……

……

……

g. Time and space will not allow <u>me</u> to tell you about other miseries. (Rewrite the sentence changing the underlined pronoun to subjective case) **(1 mark)**

……

……

……

……

h. How offensive are the passengers is the writer referring to in paragraph 1 of the passage? **(2 marks)**

……

……

……

……

Prefer Calling Amobi Group of Examiners @ 0743 333 000 or 0706 851 439 for Marking Schemes

i. What is the mood of this passage? **(2 marks)**

……

……

……

……

2. READ THE EXTRACT BELOW AND ANSWER THE QUESTIONS THAT FOLLOW

Nora:I didn't find it dull.

Helmer: *(smilling)*But there was precious little result, Nora.

Nora: Oh, you shouldn't **tease** me about that again. How could I help the cat's going in and tearing everything to pieces?

Helmer: Of course you couldn't, poor little girl. You had the best of intentions to please us all, and that's the main thing. But it is a good thing that our hard times are over.

Nora: Yes, it is really wonderful.

Helmer: This time I needn't sit here and be **dull** all alone, and you needn't ruin your dear eyes and your pretty little hands-

Nora: *(clapping her hands)* No, Tovald, I needn't any longer, need I! It's wonderfully lovely to hear you say so! (taking his arm) Now I will tell you how I have been thinking we ought to arrange things, Torvald. As soon as Christmas is over-(A bell rings in the hall.) There's the bell. (She tidies the room a little.) There's someone at the door. What a **nuisance**!

Helmer: If it is **a caller**, remember I am not at home.

Maid: *(in the doorway)* A lady to see you, ma'am,--a stranger.

Nora: Ask her to come in.

Maid: *(to Helmer)*The doctor came at the same time, sir.

Helmer: Did he go straight into my room?

Maid: Yes, sir.

Questions

1. What does Nora refer to in her opening words in this extract? **(2 marks)**

……

……

……

Prefer Calling Amobi Group of Examiners @ 0743 333 000 or 0706 851 439 for Marking Schemes

2. What has happened that has made the couple happy? (2 marks)

……

……

……

……

3. Discuss two themes evident in this extract. **(4 marks)**

……

……

……

……

4. "There's someone at the door." Add a question tag **(1 mark)**

……

……

5. A lady has come to see Nora as reported by the maid. Who is this lady and how does her coming affect the Helmers from the rest of the play. Write your answer in note form. **(6 marks)**

……

……

……

……

……

……

……

……

6. Discuss one aspect of style in this extract. **(2 marks)**

……

……

……

……

7. Briefly explain what happens after this extract. **(4 marks)**

……

……

……

Prefer Calling Amobi Group of Examiners @ 0743 333 000 or 0706 851 439 for Marking Schemes

……

……

……

……

8 Explain the meaning of the following expressions as used in the excerpt. **(4 marks)**

i) Tease

……

……

ii) Dull

……

……

iii) Nuisance

……

……

iv) A caller

……

……

QUESTION 3

Read the narrative below and then answer the questions that follow.

There was a famine in the animal kingdom. This famine had lasted so long that any existing source of food had been completely depleted. The animals knew they had to do something real quick or they would all die off one by one. They called a meeting where every animal was in attendance and they determined that they had to do something **drastic**. It was decided that the mothers would be sacrificed to ensure the continuation of the animal races. They would eat their mothers.

The dog who had been at the meeting decided to hide his mother. He was not going to sacrifice his mother, so he hid her in the sky. Every day, he would go to a particular spot where he sang a song asking his mother to drop a rope.

Dog would sing:

Mother Mother send down your rope

Prefer Calling Amobi Group of Examiners @ 0743 333 000 or 0706 851 439 for Marking Schemes

All have killed and eaten their mothers
Dog has taken his mother to the sky
Mother Mother send down your rope

His mother would drop a rope and the dog would climb to the sky where his mother would have a feast waiting for him.

One day as the dog was singing for his mother to drop the rope, the tortoise was passing by and he hid himself to observe what was going on. He heard the song dog was singing, then he saw a rope being dropped from the sky with which the dog climbed to the sky.

The following day, the tortoise went to the same spot and **disguising** his voice like the dog's, he sang the song he had heard the dog sing the day before. A rope dropped from the sky and the tortoise began to climb this rope. At this same time, the dog was just approaching the same spot and he saw the tortoise climbing to the sky. The dog immediately started to sing to his mother. This time, he sang that he was not the one climbing the rope and his mother should cut the rope. Dog's mother got a pair of scissors and cut the rope sending the tortoise crashing to the ground. This caused tortoise shell to break into several pieces. He managed to **glue** these pieces together but that is how the tortoise ended up with the rough shell we know today.

(a) With a reason, classify this oral narrative. **(2marks)**

……

……

……

……

(b) Identify and illustrate **two** features of oral narratives evident in the story above. **(4marks)**

……

……

……

……

……

……

Prefer Calling Amobi Group of Examiners @ 0743 333 000 or 0706 851 439 for Marking Schemes

……

……

(c) How important is the song sung by dog to his mother? **(2marks)**

……

……

……

……

(d) Why did the dog have to sing at that particular spot? **(2marks)**

……

……

……

……

(e) Describe **two** character traits of Dog as depicted in the story. **(4marks)**

……

……

……

……

……

……

(f) Explain **one** theme evident in the story. **(2marks)**

……

……

……

(g) The following day, the tortoise went to the same spot and disguising his voice like the dog's, he sang the song he had heard the dog sing the day before. **(1mark)**

Rewrite beginning with: The tortoise…

……

……

……

Prefer Calling Amobi Group of Examiners @ 0743 333 000 or 0706 851 439 for Marking Schemes

Give the meaning of the following words as used in the story. **(3marks)**

i. Drastic **…….**

ii. Disguising **…….**

iii Glue **…….**

4. GRAMMAR

(a) ***Use the correct form of the word in brackets to complete the following sentences:*** ***[5 marks]***

i. The dress I bought for my baby has**……..(shrink)**

ii. The government promised to cushion Kenyans against Covid-19 until**……** returns**.(normal)**

iii. The financial experts advised me that it is**……..** (hazard) to think of investing now.

iv. Resian lives in a**…….. (dominant)** male society.

v.Taiyo and Resian's lives were**…….(separate**) linked.

(b) ***Replace the underlined word in each of the following sentences with appropriate phrasal verb.*** **[3 marks]**

i. Agege always visits at meals time.

……

……

ii. The late president of Burundi refused to relinquish power in 2015 leading to bloodshed.

……

……

iii. The ten people who tested positive for Covid-19 are stabilizing at Mbagathi Hospital.

……

……

(c) ***Rewrite the following sentences as instructed. Do not change the meaning*:** **[4 marks]**

(i) It was a bizarre incident.[Rewrite beginning: How……..]

……

……

Prefer Calling Amobi Group of Examiners @ 0743 333 000 or 0706 851 439 for Marking Schemes

ii. Walking around without wearing a mask is dangerous.[Rewrite using a to infinitive]

……

……

……

iii. It would be unwise to open schools amid the Covid-19 pandemic. (extremely). [Put the word in brackets in its correct position in the sentence]

……

……

iv)When the people burst into the councilors office he had not even sat down. (Begin: Hardly)

……

……

d) Fill the blank spaces with the correct preposition

a) I am indebted _____ him for the help he gave me.

b) She has always confided _____ him.

c) The ailing man has been in bed _____ the whole week.

Prefer Calling Amobi Group of Examiners @ 0743 333 000 or 0706 851 439 for Marking Schemes

BRILLIANT STUDENTS

FORM 3 END TERM 3 SERIES 3 EXAMS

NAME: ……..

SCHOOL: ……...

ADM NO: …… SIGN: …… DATE: ……...

101/3 –

ENGLISH - Paper 3

(Imaginative Compositions and Essays Based on Set Texts)

2 ½ hours

Instructions to Candidates

(a) *Write your name and index number in the spaces provided above.*

(b) *Sign and write the date of the examination in the spaces provided above.*

(c) *Answer **three** questions in this question paper.*

(d) *In question 1, choose either a or b.*

(e) *Question 2 is compulsory*

(f) *In question 3, answer a or b or c.*

(g) *All your answers must be written in the provided answer booklet.*

(h) ***Candidates should check the question paper to ascertain that all the pages are printed as indicated and that no questions are missing.***

(i) ***Candidates must answer the questions in English.***

For Examiner's Use Only

Questions	Maximum Score	Candidate's Score
1	20	
2	20	
3	20	
	Total	

Prefer Calling Amobi Group of Examiners @ 0743 333 000 or 0706 851 439 for Marking Schemes

Creative composition and text based essays

1 a. Write a composition ending with the following statement

……..a final look at her made me realize that choices have consequences **(20 mks)**

Or

b. Write a story to illustrate the proverb Hurry hurry has no blessings **(20mks)**

Compulsory set text

2a) " Money is the source of all evil". Support this statement with illustrations from the play the doll's house by Henkrik Ibsen **(20mks).**

Or

b)"Change is inevitable in any society". Validate this statement with the illustrations from the n novel, Blossoms of the Savannah (By Henry Ole Kulet)

Prefer Calling Amobi Group of Examiners @ 0743 333 000 or 0706 851 439 for Marking Schemes

BRILLIANT STUDENTS

FORM 3 END TERM 3 SERIES 3 EXAMS

NAME: ……

SCHOOL: ……

ADM NO: …… **SIGN:** …… **DATE:** ……

END OF TERM 3 EXAMINATIONS

FORM THREE GEOGRAPHY

312/1 (GEOGRAPHY PAPER 1)

TIME: 2 HOURS 45 MINUTES

INSTRUCTIONS TO CANDIDATES

- *This paper has **two** sections: **A** and **B***
- *Answer **ALL** the questions in **section A.***
- *In section **B,** answer **questions 6** and any other **TWO** questions.*
- *All the answers must be written **in English** on the foolscaps provided.*

SECTION A

(Answer all the questions from this section)

1.(a) Define the term mineral. **(2 marks)**

(b) Give **three** examples of metamorphic rocks. **(3 marks)**

2.(a) Differentiate between rotation and revolution of the earth. **(2 marks)**

(b) State **three** reasons why the interior of the earth is very hot. **(3 marks)**

3.(a) Name **two** areas in Kenya where heath and moorland vegetation is found. **(2 marks)**

(b) State **three** characteristics of mangrove forests. **(3 marks)**

Prefer Calling Amobi Group of Examiners @ 0743 333 000 or 0706 851 439 for Marking Schemes

4.The diagram below shows a vertical section through the zones of underground water.

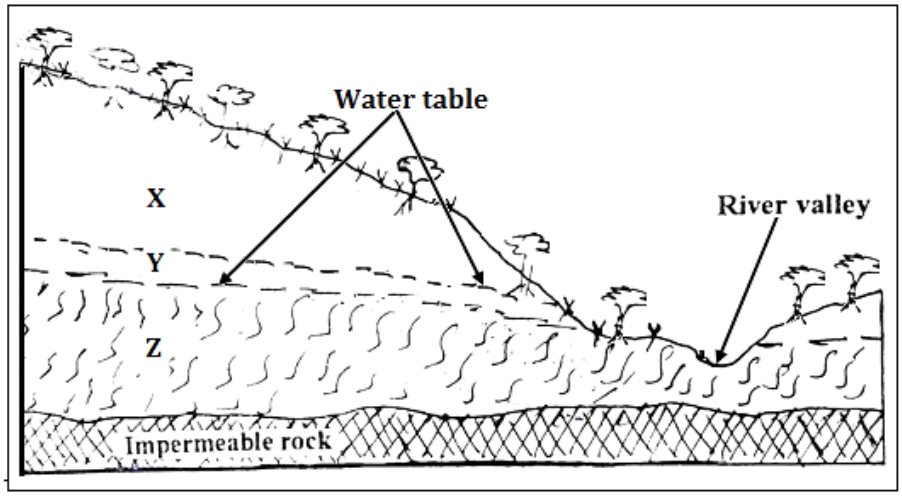

(a) Name the zones marked X, Y and Z **(3 marks)**

(b) State three ideal conditions necessary for the formation of an artesian well. **(3 marks)**

5.Outline **four** ways through which lakes in Kenya were formed. **(4 marks)**

SECTION B

(Answer question 6 and any other two questions from this section)

6.Study the map of Yimbo provided and use it to answer questions that follow.

(a)(i) Give **two** methods used to present relief on the map extract. **(2 mark)**

(ii) What is the latitudinal extent of the area covered by the map? **(2mark)**

(iii) Determine the six figure grid reference of a waterhole North of Port Southby. **(2 marks)**

(b)(i) Identify **four** types of natural vegetation in the area covered by the map**.** **(4 marks)**

(ii) Citing evidence from the map, give **two** social services offered in the area covered by the map. **(4 marks)**

(iii) Describe the relief of the area covered by the map **(5 marks**

(c) Draw a square 10 cm by 10 cm to represent the region west of easting 21 and North of Northing 90.

On the square, mark and name:

- Lake Sare
- A thicket
- Busia District
- All weather road loose surface. **(6 marks)**

Prefer Calling Amobi Group of Examiners @ 0743 333 000 or 0706 851 439 for Marking Schemes

7.(a) (i) Differentiate between weather and weather forecasting. **(2 marks)**

(ii) Give **three** examples of low clouds. **(3 marks)**

(b) Explain how the following factors affect the temperature of a place:

(i) Cloud cover. **(3 marks)**

(ii) Aspect. **(3 marks)**

(c) With the aid of a well labelled diagram, describe how convectional rainfall is formed**.** **(8 marks)**

(d) Suppose you were to carry out a field study at a weather station:

(i) State **three** objectives that you would set for the study. **(3 marks)**

(ii) Give **three** follow up activities for the field study. **(3 marks)**

8.The diagram below represents types of faults and some fault features.

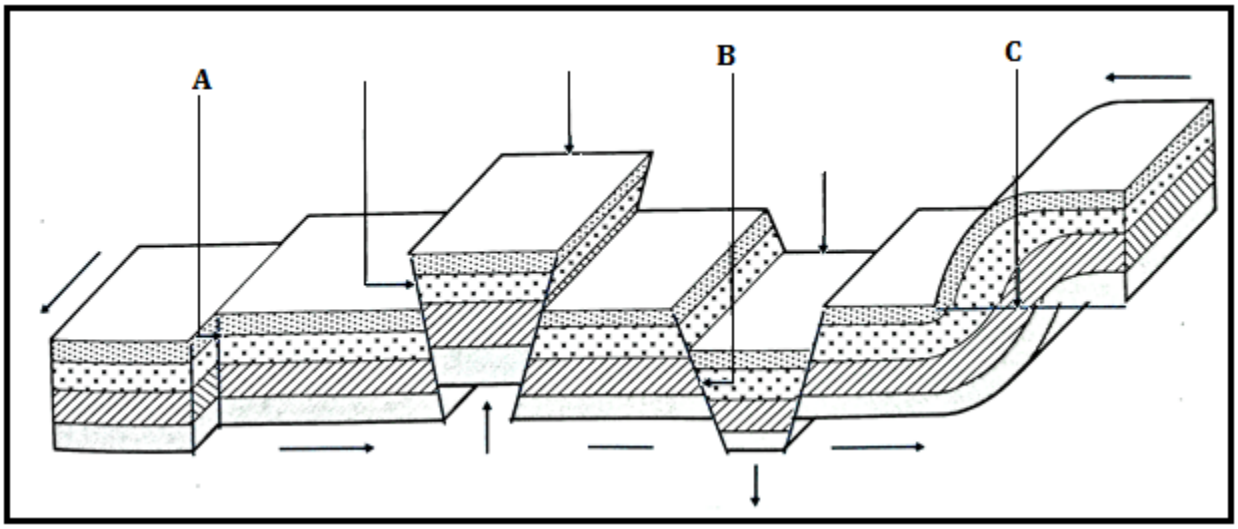

(a) Name the type of faults marked A, B and C. **(3 marks)**

(b) Explain how Isostatic adjustment causes earth movements **(3 marks)**

(c)(i) Apart from rift valleys and fault blocks, list **three** other features formed due to faulting. **(3 marks)**

(ii) Using well labelled diagrams, describe how a rift valley is formed due to compression forces. **(8 marks)**

(d) Explain **four** ways through which features resulting from faulting affects human activities**.** **(8 marks)**

9.(a) Define the term desertification. **(2marks)**

(b) Explain **three** ways in which wind transports its load **(6marks)**

(c) With the aid of a well labeled diagram, describe how yardangs are formed. **(7 marks)**

Prefer Calling Amobi Group of Examiners @ 0743 333 000 or 0706 851 439 for Marking Schemes

(d) A group of form four students went out for a field study on action of water in an arid area.

(i) Name **three** erosional features that they are likely to have observed. **(3 marks)**

(ii) State **three** problems they have encountered during the field study. **(3marks)**

(iii) What activities would they recommend to the residents in the area as an effort to control desertification? **(4 marks)**

10.(a) List **three** types of glacier. **(3marks)**

(b) Explain how glacier erodes through the following processes.

(i) Plucking **(3 marks)**

(ii) Abrasion **(3 marks)**

(c) The diagram below shows some features formed due to glacial deposition in lowlands.

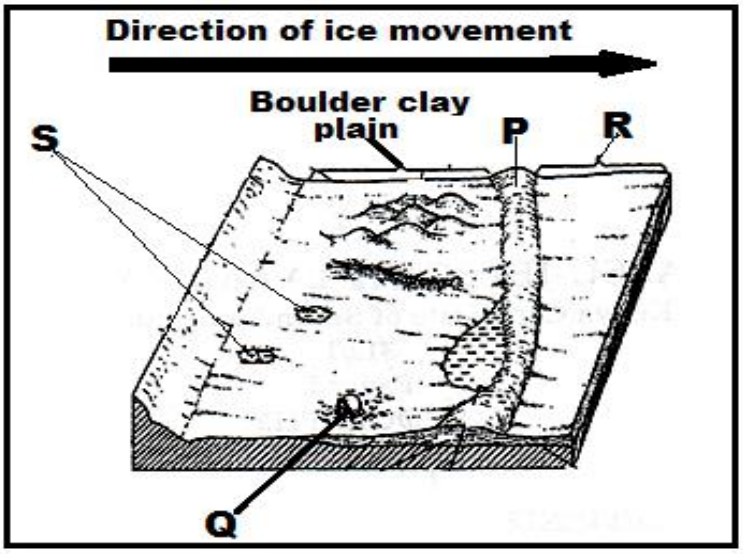

(i) Name the parts marked P, Q, R and S. **(4marks)**

(ii) Describe how a glacial trough is formed. **(6marks)**

(d) Explain **three** negative effects of glaciated landscapes. **(6 marks)**

Prefer Calling Amobi Group of Examiners @ 0743 333 000 or 0706 851 439 for Marking Schemes

BRILLIANT STUDENTS

FORM 3 END TERM 3 SERIES 3 EXAMS

NAME: ……..…….…….…….…….…….…….…….…….

SCHOOL: …….…….…….…….…….…….…….…….……...

ADM NO: …… SIGN: …… DATE: ……...

312/2

GEOGRAPHY

PAPER 2.

FORM 3

TIME: 2 ¾ HRS

END OF TERM 3 EXAMINATIONS

Instructions.

This paper contain TWO section A and B. ANSWER ALL questions in Both sections.

In a separate booklet provided.

SECTION A.

1.a. What is mining? **(2mks)**

b. State three factors influencing the occurrence of minerals. **(3mks)**

2.a. Name two indigenous softwood trees species. **(2mks)**

b. Give three factors that favour the growth of Natural forests on the slopes of Mt. Kenya. **(3mks)**

3.a. What is sampling? **(2mks)**

b. Give three main types of sampling techniques. **(3mks)**

4.a. List two open cast methods of mining. **(2mks)**

b. What are the effects of dereliction of land during mining? **(3mks)**

5.a. A student was requested to pick out fourteen numbers randomly from a set of numbers.

She picked 20, 37, 1, 66, 42, 12, 6, 15, 12, 42, 100, 3, 82, and 42. Calculate:

i. The mean of the data. **(2mks)**

ii. The mode of the data. **(1mk)**

iii. The median of data. **(2mks)**

Prefer Calling Amobi Group of Examiners @ 0743 333 000 or 0706 851 439 for Marking Schemes

SECTION B.

6.a. The table below shows hypothetical data of minerals production in Tanzania in tones. Use it to construct proportional divided circles.

	Quantity in tonnes		
Minerals	**1998**	**1999**	**2000**
Graphites	200	490	930
Fluorspar	30	255	450
Soda ash	270	300	350
Diamond	500	870	1270
Total	1000	1915	3000

b. State three advantage of proportional divided circles. **(3mks)**

7.a. State four factors influencing exploitation of minerals. **(4mks)**

c. The map below show location of mineral in East Africa, use it to answer questions c (i) diagram

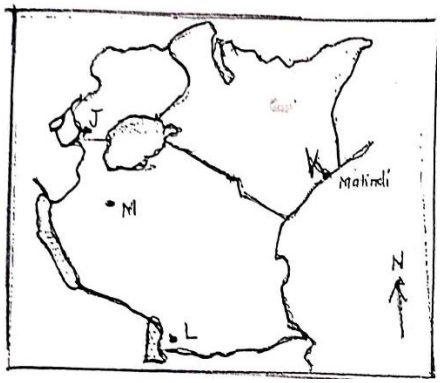

i. Name the minerals found in areas marked J, K, L and M. **(4mks)**

ii. Describe the process of Trona in Lake magadi. **(4mks)**

d. Your class intend to carry out a field study of mining of Trona in Lake Magadi.

i. State four reasons why it is important to conduct a reconnaissance. **(4mks)**

ii. Give three items to be included in the working schedule for the study . **(3mks)**

e. State three benefits of Trona to the economy of Kenya. **(3mks)**

Prefer Calling Amobi Group of Examiners @ 0743 333 000 or 0706 851 439 for Marking Schemes

8.a. What is forestry? **(2mks)**

ii. Apart from tropical hardwood forest name two other types of natural forest. **(2mks)**

iii. State the problems experienced in exploitation of tropical hardwood forest. **(5mks)**

b. List the characteristics of planted forests in Kenya. **(5mks)**

c. Explain three factors that favour forestry in Canada. **(6mks)**

d. Give five measures that the government has taken to conserve and manage forests in Kenya**.** **(5mks)**

e. Form four students in your school carried out a field study on the forestry within the county.

i. Give reasons they had to prepare a working schedule. **(3mks)**

ii. What are the problems likely to be encountered during the field study? **(2mks)**

Prefer Calling Amobi Group of Examiners @ 0743 333 000 or 0706 851 439 for Marking Schemes

BRILLIANT STUDENTS

FORM 3 END TERM 3 SERIES 3 EXAMS

NAME: ……..

SCHOOL: ……...

ADM NO: …… **SIGN:** …… **DATE:** ……...

HISTORY AND GOVERNMENT FORM 3

END OF TERM 3

TIME: 2HRS

INSTRUCTIONS

- **Do all the questions in spaces provided**

SECTION A :25 marks

1. Identify **three** sources of History and Government in Kenya. **(3mks)**

2. Identify **two** sub groups of the Kalenjin speakers. **(2mks)**

3. Name the winds that aided the early visitors to come to the Kenyan coast up to 1500AD. **(1mk)**

4. Identify **one** area in Africa where agriculture began. **(1mk)**

5. Identify **two** education commissions established in Kenya before independence. **(2mks)**

6. State **two** peaceful of resolving conflicts. **(2mks)**

7. Give **two** features of Roman roads by 300AD. **(2mks)**

8. Identify **one** method of irrigation used in Ancient Egypt. **(1mk)**

9. Give **one** method used by the French to administer their colonies in Africa. **(1mk)**

10. State **two** rules played by the African chiefs in British colonial administration. **(2mks)**

11. Identify **two** European powers that acquired colonies in East Africa. **(2mks)**

12. Give **one** reason why Homo Habilis was referred to as "able" man. **(1mk)**

13. Mention **three** features of African political associations formed in Kenya before 1939. **(3mks)**

14. Give **two** functions of London. **(2mks)**

Prefer Calling Amobi Group of Examiners @ 0743 333 000 or 0706 851 439 for Marking Schemes

SECTION B: 45 MKS

15.a) Give **five** reasons which influence the migration of the Abagusii into Kenya during the pre-colonial period. **(5mks)**

b) Discuss **five** effects of migration and settlement of the plain Nilotes during the pre- colonial period. **(10mks)**

16 a) Give **five** reasons why third world countries have lagged behind in industrialization. **(5mks)**

b) Explain five effects of iron working in African societies before the 19th century. **(10mks)**

17 a) Give **five** reasons why Lewanika collaborated with the British. **(5mks)**

b) Discuss five factors that led to SAMOURI TOURE's defeat by the French. **(10mks)**

SECTION C: 30MARKS

ANSWER ANY TWO QUESTIONS

18 a) Outline the structure of indirect rule in British colonies. **(5mks)**

b) Discuss **five** factors that led to the formation of early political organization in colonial period in Kenya **(10mks)**

19 a) State **three** aims od K,A.U. **(3mks)**

b) Explain **five** factors that led to the Mau Mau uprising in colonial Kenya. **(12mks)**

20 a) State **five** factors that led to the formation of trade unions in colonial Kenya. **(5mks)**

b) Identify ways in which trade union movement contributed to the struggle for independence in Kenya. **(10mks)**

Prefer Calling Amobi Group of Examiners @ 0743 333 000 or 0706 851 439 for Marking Schemes

END ALL THE BEST

Prefer Calling Amobi Group of Examiners @ 0743 333 000 or 0706 851 439 for Marking Schemes

BRILLIANT STUDENTS

FORM 3 END TERM 3 SERIES 3 EXAMS

NAME: ……..

SCHOOL: ……...

ADM NO: …… SIGN: …… DATE: ……...

END OF TERM 3 EXAMINATIONS

311/2

HISTORY AND GOVERNMENT

PAPER 2

FORM THREE

2HRS 30MIN

SECTION A (25 MARKS)

Answer all the questions in this section

1.Name countries that use constitutional monarchy form of government. **(2mks)**

2.Give the meaning of the term History. **(1mk)**

3.Identify 2 sources of History and Government. **(2mks)**

4.Name two periods in the metallic age period. **(2mks)**

5.Outline one aspect of history. **(1mk)**

6.Identify the human ancestors associated with the new stone age. **(2mks)**

7.Name one species of Austropithecus. **(1mk)**

8.Name one Paleolithic period. **(1mk)**

9.Name two sources of the British constitution. **(2 mks)**

10. Define the term scramble. **(1 mk)**

11. Name one community that collaborated with the British outside Kenya **(1mk)**

12. Give two ways used by the Europeans to acquire colonies in Africa. **(2 mks)**

Prefer Calling Amobi Group of Examiners @ 0743 333 000 or 0706 851 439 for Marking Schemes

13. List two communes where assimilation was practiced in Senegal. **(2 mks)**

14. Name two types of democracy. **(2 mks)**

15. Name one reform introduced after the Majimaji rebellion. **(1 mk)**

16. State one factor that helped Samouri Toure to resist the Europeans. **(1 mk)**

17. Name the British company that administered southern Africa during the company rule. **(1 mk)**

SECTION B (45 MARKS)

Answer any three (3) questions

18. a) State two inventions in agriculture during the Agrarian revolution. **(3mks)**

b) Explain the impacts of the early agriculture in Mesopotamia. **(12mks)**

19. a) Outline five advantages of animal transport. **(5mks)**

b) Discuss the challenges facing industrialization in the third world countries **(10mks)**

20. a) Identify three economic factors for the scramble of Africa. **(3mks)**

b) Explain the results of the Chimurenga war. **(12mks)**

21. a) State three qualifications for assimilation. **(5mks)**

b) Discuss the reasons for the defeat of Samouri Toure. (**10mks)**

SECTION C (30 MARKS)

Answer any two (2) questions

22. a) State three terms of Berlin conference **(3mks)**

b) Explain the reasons why the British used direct rule in Zimbabwe. **(12mks)**

23. a) state three economic activities of the Buganda **(3mks)**

b) Describe the social organization of the Asante. **(12 mks)**

24. a) State three early sources of energy. **(3 mks)**

b) Explain six features of the industrial revolution in Britain. **(12mks)**

Prefer Calling Amobi Group of Examiners @ 0743 333 000 or 0706 851 439 for Marking Schemes

BRILLIANT STUDENTS

FORM 3 END TERM 3 SERIES 3 EXAMS

NAME: ……

SCHOOL: ……

ADM NO: …… **SIGN:** …… **DATE:** ……

HOME SCIENCE PP1 FORM 3

END OF TERM 3

Time: 2 ½

SECTION A

1.Identify four nutrients whose intake should be increased during pregnancy and state why **(4mks)**

……

……

……

……

……

……

2.Give two reasons for dipping boiled eggs in cold water. **(2mks)**

……

……

……

……

3.Give two reasons why brown bread is preferable to white bread. **(2mks)**

……

……

……

……

……

Prefer Calling Amobi Group of Examiners @ 0743 333 000 or 0706 851 439 for Marking Schemes

4.Why is steaming food highly recommended for cooking for an invalid? **(2mks)**

……

……

……

……

5.Outline three precautions to take when bathing a baby. **(3mks)**

……

……

……

……

……

6.State two reasons for giving extra iron to an expectant woman. **(2mks)**

……

……

……

……

7.Give three importances of immunization. **(3mks)**

……

……

……

……

……

8.Define the term immunisation. **(1mk)**

……

……

……

9.Name two causes of cracked or sore nipples during breast feeding. **(2mks)**

……

……

……

……

Prefer Calling Amobi Group of Examiners @ 0743 333 000 or 0706 851 439 for Marking Schemes

10. List four importances of breastfeeding. **(4mks)**

……

……

……

……

……

……

11. Give reasons why weaning should be done gradually. **(1mk)**

……

……

……

……

12. State four factors to consider when weaning a baby. **(4mks)**

……

……

……

……

……

……

13. a. What time should weaning begin? **(1mk)**

……

……

……

b. why. **(2mks)**

……

……

……

……

14. What is a habit? (1mk)

……

……

Prefer Calling Amobi Group of Examiners @ 0743 333 000 or 0706 851 439 for Marking Schemes

……

……

15. Name four habits that the child must be train on. **(2mks)**

……

……

……

……

16. Identify four desirable qualities of a baking power. **(2mks)**

……

……

……

……

17. Name two methods of cake making. **(2mks)**

……

……

……

……

18. What is batter? **(1mk)**

……

……

……

……

SECTION B (COMPULSORY QUESTION)

19. a. Explain briefly five factors that influence consumer buying. **(10mks)**

……

……

……

……

……

……

……

Prefer Calling Amobi Group of Examiners @ 0743 333 000 or 0706 851 439 for Marking Schemes

……

……

……

……

……

……

……

……

b. You have prepared a food budget state six ways of reducing food expenditure in your home. **(6mks)**

……

……

……

……

……

……

……

c. Identify four factors that may interfere with a family budget. **(4mks)**

……

……

……

……

……

……

SECTION C

ANSWER ANY TWO QUESTIONS

20. a Explain how to launder a woollen jumper. **(10mks)**

b. Draw 10(ten) care label symbols and give their meaning. **(10mks)**

21. a. List 6 point to consider when making a seam. **(6mks)**

b. Name five methods of neatening raw edges. **(5mks)**

c. With aid of well labelled diagrams, explain how to make French seams. **(9mks)**

Prefer Calling Amobi Group of Examiners @ 0743 333 000 or 0706 851 439 for Marking Schemes

22. a. What is kwashiorkor? **(1mk)**

b. List five signs and symptoms of kwashiorkor. **(5mks)**

c. name two ways to prevent occurrence of kwashiorkor. **(2mks)**

d. List five ways on management of kwashiorkor. **(5mks)**

e. Discuss how to conserve food nutrients during preparations, cooking and storage. **(7mks)**

i. Preparation

ii. Cooking

iii. storage

……

……

……

……

……

……

……

……

……

……

……

……

……

……

……

……

……

……

……

……

……

……

Prefer Calling Amobi Group of Examiners @ 0743 333 000 or 0706 851 439 for Marking Schemes

BRILLIANT STUDENTS

FORM 3 END TERM 3 SERIES 3 EXAMS

NAME: ……

SCHOOL: ……

ADM NO: …… **SIGN:** …… **DATE:** ……

Term 3

HOME SCIENCE (441/2)

PAPER 2

CLOTHING AND CONSTRUCTION

FORM THREE (3)

Time: 2½ Hours

Instructions to candidates

This paper consists of 3 printed pages

Candidates should check the question paper to ascertain that all the pages are printed as indicated and that no questions are missing

GIRL'S SKIRT

A pattern of a girl's skirt is provided. You are advised to study the sketches, instructions and layout carefully before you begin the test.

MATERIALS PROVIDED

1.PATTERN PIECES

A. Skirt back
B. Yoke [front]
C. Lower skirt [front]
D. Front waistband
E. Back waistband
F. Frill
G. Pocket

Prefer Calling Amobi Group of Examiners @ 0743 333 000 or 0706 851 439 for Marking Schemes

2.Plain light weight cotton fabric 56 cm long by 90 cm wide.

3.Sewing thread to match the fabric

4.One large envelope.

THE TEST

Using the materials provided, cut out and make the left half of the girl's skirt to show the following processes;

a) Cutting out. **(20½ marks)**

b) Making of the dart at the back skirt. **(5½ marks)**

c) Joining of the yoke front to the lower skirt front using an overlaid seam. **Do not trim**.
Neaten half of the seam using loop stitches. **(12 marks)**

d) Preparation and attaching of the patch pocket **(9 marks)**

e) Attaching of the frill to the lower skirt front using a plain seam.
Do not trim the seam allowance. **(10 marks)**

f) Making of the skirt side seam from the yoke to the hemline using an open seam. **(7 marks)**

g) Attaching of the front and back waistbands and holding them in place using even tacking stiches. **(20 marks)**

OMIT

h) The management of the skirt hem

i) Overall presentation **(6 marks)**

Prefer Calling Amobi Group of Examiners @ 0743 333 000 or 0706 851 439 for Marking Schemes

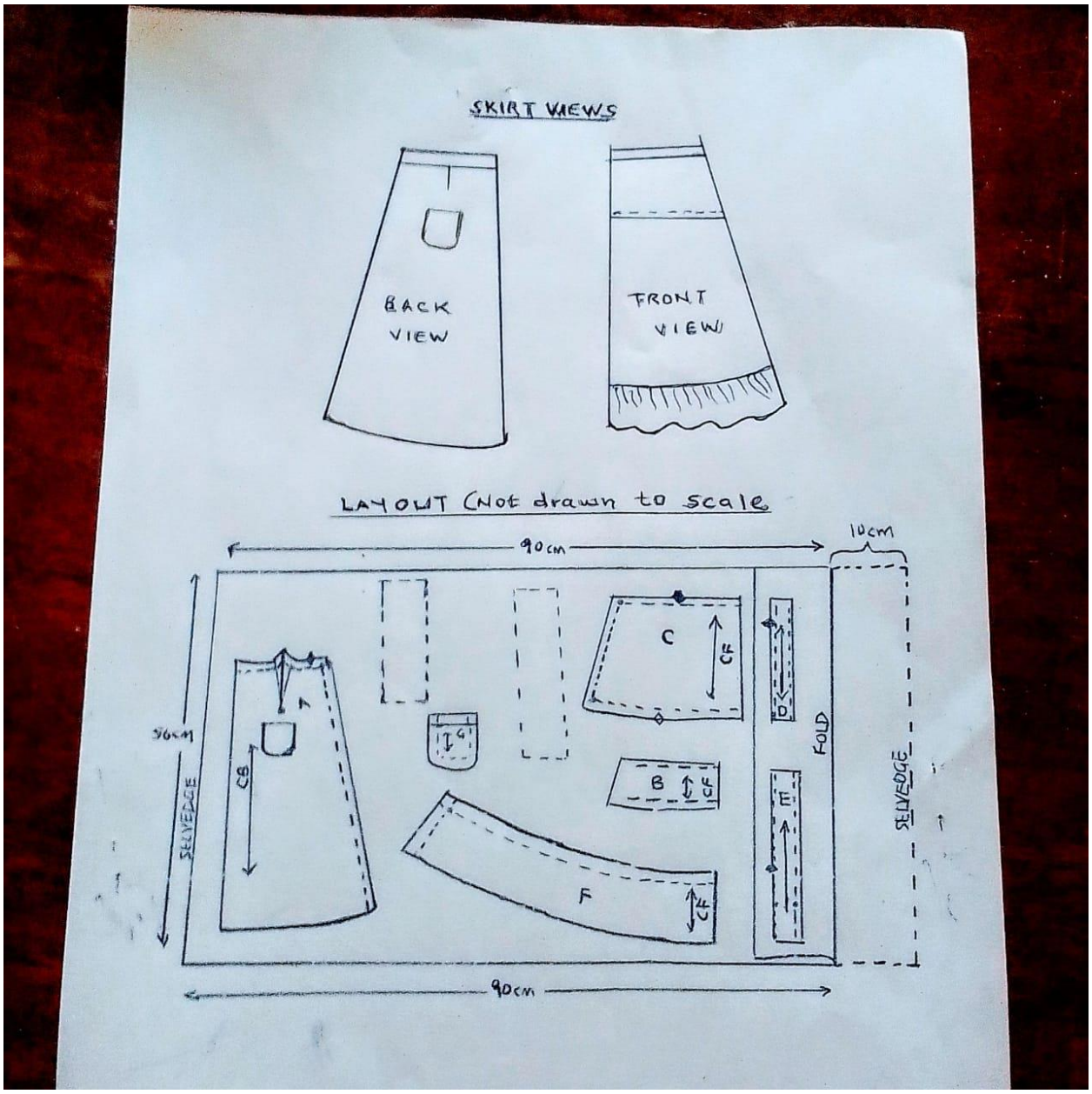

Prefer Calling Amobi Group of Examiners @ 0743 333 000 or 0706 851 439 for Marking Schemes

BRILLIANT STUDENTS

FORM 3 END TERM 3 SERIES 3 EXAMS

NAME: ……

SCHOOL: ……

ADM NO: …… SIGN: …… DATE: ……

441/3 - HOMESCIENCE

Paper 3

(PRACTICAL)

FOODS AND NUTRITION 1 ¾ hours

Instructions to Candidates

PLANNING SESSION	30 minutes
PRACTICAL TEST SESSION	1 ¼ hours

a) Read the test carefully

b) Textbooks and recipes may be used during the planning session as reference materials

c) You will be expected to keep your order of work during the practical session

d) You are only allowed to take away your reference materials that the end of the planning session

e) You are not allowed to bring additional notes to the practical session.

This paper consists of 2 printed pages.

Candidates should check the question paper to ascertain that both produce a printed as indicated and that no questions are missing.

Prefer Calling Amobi Group of Examiners @ 0743 333 000 or 0706 851 439 for Marking Schemes

THE TEST

You are delivering lunch to your sister who has recently given birth through a Caesarean section. Using all the ingredients listed below prepare, Cook and pack a suitable one course lunch for two. Include a nutritious drink.

Ingredients

Milk

Sugar

Potatoes/ Green Bananas/ Rice

Green grams/Liver

Salt

Oil

Coriander

Tomatoes

Onions

Fruits in season

Cabbage/ green leafy vegetable

Carrots

PLANNING SESSION 30 minutes

Use separate sheets of paper for each task listed below and a carbon paper to make duplicate copies. Then proceed as follows:

1. Identify the dishes and write down the recipes;
2. Write down your order of work;
3. Make a list of the food stuff and equipment you will require

Prefer Calling Amobi Group of Examiners @ 0743 333 000 or 0706 851 439 for Marking Schemes

BRILLIANT STUDENTS

FORM 3 END TERM 3 SERIES 3 EXAMS

JINA: ……..…….…….…….…….…….…….…….…….

SHULE: …….…….…….…….…….…….…….…….…….

NAMBARI YA USAJILI: …… SAHIHI: …… TAREHE: ……

102/1

KISWAHILI

KARATASI YA 1

(INSHA)

MUDA: SAA $1^3/_4$

MUHULA WA TATU

KISWAHILI KIDATO CHA TATU

MAAGIZO:

- Andika insha mbili. Insha ya kwanza ni ya **lazima**
- Kisha chagua insha moja nyingine kutoka kwa hizo tatu zilizobakia.
- Kila insha isipungue maneno 400
- Kila insha ina alama 20
- Karatasi hii ina kurasa 2. Matahiniwa ni lazima aangalie kama kurasa zote za karatasi hii zimepigwa chapa sawasawa na kuwa maswali yote yamo

1. **SWALI LA LAZIMA**.

Visa vya dhuluma dhidi ya mtoto wa kike vimeongezeka sana nchini.Andika taarifa ya hali hii nchini.

2. Uhifadhi wa mazingira una manufaa mengi kwa binadamu .Thibitisha.

3. Kutangulia si kufika.

4. Malizia kwa……tulifukumana huku nyuso zetu zikiwa na tabasamu la matumaini.

Prefer Calling Amobi Group of Examiners @ 0743 333 000 or 0706 851 439 for Marking Schemes

BRILLIANT STUDENTS

FORM 3 END TERM 3 SERIES 3 EXAMS

JINA: ……..……

SHULE: ……..……..

NAMBARI YA USAJILI: …… SAHIHI: …… TAREHE: ……...……

MUHULA WA TATU

KIDATO CHA TATU

102/2

KISWAHILI

KARATASI YA 2

LUGHA

SAA 2 ½

- Andika jina na namba yako katika nafasi ulizoachiwa hapo juu
- Jibu maswali yote. Majibu yako yaandikwe katika nafasi zilizoachwa wazi katika kijitabu hiki cha maswali.

Swali	Upeo	Alama
1	15	
2	15	
3	40	
	10	
	Jumla	

Prefer Calling Amobi Group of Examiners @ 0743 333 000 or 0706 851 439 for Marking Schemes

SEHEMU YA A: UFAHAMU (ALAMA 15)

Soma kifungu kifuatacho kisha ujibu maswali

"Asubuhi moja ilinipata ndani ya afisi ya mwalimu mkuu wa Shule ya Kilimo. Mwalimu Mkuu, Bi. Tamasha alisikiliza kadhia yangu kwa makini. Hakuonyeha kushtuka kwa yaliyonipata katika umri wangu mdogo hivi. 'Unaweza kuanza masomo katika darasa la pili. Nitamwomba mzazi mmoja akupe hifadhi,' alisema Bi. Tamasha. Huo ndio uliokuwa mwanzo wa maisha yangu katika makao ya wafanyikazi wa mashamba ya chai. Bwana Tenge na mkewe, Kimai, walinichukua kunilea pamoja na watoto wao watano. Wenzangu, nyinyi hamjui adha zinazowapata wafanyakazi wa kima kidogo. Mtajuaje na haamjawahi kukikalia kitanda hiki mkafahamiana a kunguni wake? Ninayowaambia ni asilimia ndogo mno ya niliyoyaona. Chumba cha wafadhili wangu kilikuwa hichohicho kimoja; ndicho cha mlazi, ndicho cha mpokezi, ndicho jikoni. Sebule na chumba cha malazi viligawanywa na shuka moja nyepesi. Usiku sisi watoto tulilala juu ya vigodoro ambavyo ni kama viliwekwa mvunguni mwa kitanda cha wazazi.

"Usiniulize niliyaona na kuyaskia mangapi katika chumba hiki ambacho kiligeuka *danguro* wakati Bi. Kimai alipokuwa ameenda mashambani. Wakati huu Bwana Tenge angeamua kumleta mwanamke mmoja baada ya mwingine, hapo hapo, mbele ya macho ya wanawe, hadi usiku wa kuamkia siku ya kurudi kwa Bi. Kimai. Mara mojamoja Bi. Kimai angerudi bila kutarajiwa na kumshika ugoni mke mwenzake!Mwaa mmoja, miwili, mitatu ... hata nikaona kwamba, mbali na dhiki za kisaikolojia nilizozipata kwa kushuhudia vituko vya kila aina, nilikuwa mzigo mkubwa kwa wahisani wangu. Si kwamba waja hawa walinibagua, la! Kusema hivyo kutakuwa kuwapaka mashizi bure. Hata hivyo nilihisi kwamba nimepata mbavu za kufanya angaa kibarua kidogo, na kuwatua wawili hawa mzigo wa kuninunulia sare na madaftari.

"Nlianza kuchuna majani chai kwa malipo kidogo nikiwa katika darasa la tano. Wakati mwingine ningerauka alfajiri na mapema kufanya kazi kabla ya kwenda shuleni saa kumi na mbili asubuhi. Jioni nilipitia huko huko. Nyakati nyingi nililala humo humo katikati ya michai, wakati mwingine kwa marafiki wanfu, kwa Bwana Tenge, na juu ya uchaga mkubwa wa saruji uliotumiwa kama karo na wauza chakula sokoni. Hakuna mmoja kati ya walimu wangu aliyejua mabadiliko haya hadi pale nilipoufanya mtihani wangu wa darasa la nane na kufuzu vyema.

"Wakati huo Bwana Tenge alikuwa ameishi kupewa uhamisho, akaenda kufanya kazi katika shamba lingine. Ndivyo wafanywavyo wafanyakazi hawa; kuhamishwa kila uchao bila mtu kuwazia kwamba wana watoto wanaoenda shule, na kwamba kuhamahama huku kunawavurugia masomo wana hawa."

Prefer Calling Amobi Group of Examiners @ 0743 333 000 or 0706 851 439 for Marking Schemes

Maswali

i) Eleza namna wazazi wanavyoweza kuchangia katika kuzorotesha maadili ya watoto katika jamii. **(al.2)**

……

……

……

……

ii) Onyesha namna haki za watoto zilivyokiukwa katika kifungu. **(al.3)**

……

……

……

……

……

iii) Wafanyakazi wa kima kidogo hupitia dhiki zipi kulingana na kifungu? **(al.3)**

……

……

……

……

……

iv) Eleza sifa tatu za mkewe Tenge – Kimai. **(al.3)**

……

……

……

……

……

v) Eleza namna ndoa inavyosawiriwa katika kifungu. **(al.2)**

……

……

……

……

Prefer Calling Amobi Group of Examiners @ 0743 333 000 or 0706 851 439 for Marking Schemes

vi) Eleza maana ya maneno haya kama yalivyotumiwa katika kifungu; (al.2)

a. Danguro

……

……

……

b. Kisaikolojia

……

……

……

SEHEMU YA B **(ALAMA 15)**

Soma kifungu hiki kisha ujibu maswali

Ripoti za kila mara kuhusu uharibifu wa pesa za umma katika serikali za kaunti ni za kusikitisha. Kuna mabilioni ya pesa za mlipa ushuru ambazo hufujwa katika serikali kuu, na hivyo basi wananchi wanakosewa sana wanapoona mtindo huu ukiendelea pia katika serikali za kaunti. Wakati katiba ilipopitishwa mwaka wa 2010, wakenya wengi walikuwa na matumaini mno kwamba ugatuzi ungewatatulia matatizo ambayo walikuwa wakipata katika tawala zilizotangulia, hasa katika maeneo yaliyotengwa kimaendeleo.

Miaka tisa baadaye, kuna mafanikio ambayo yamepatikana ila hatua kubwa zaidi inaweza kupigwa katika kuboresha maisha ya raia kama mianya inayotumiwa kufuja pesa za umma itazibwa. Wizi huu unaojumuisha pia jinsi magavana wanavyobuni nafasi za kazi zisizo na maana ambazo wakati mwingi hupeanwa kwa jamaa na marafiki wao, ni sharti ukomeshwe mara moja.

Kuna wananchi wengi ambao tayari wameanza kufa moyo kuhusu umuhimu wa ugatuzi ilhali ukweli ni kwamba hatungependa kurejelea utawala ulio chini ya serikali kuu pekee. Changamoto za ugatuzi zinazosababishwa na ulafi wa viongozi wachache zinatoa nafasi kwa wakosoaji wa mfumo huu wa uongozi kushawishi wananchi na hata wahisani wasishughulike kuchangia kaatika maendeleo ya kaunti zao.

Juhudi zozote zile za maendeleo haziwezi kufanikisha bila ushirikiano kutoka kwa wananchi na wahisani na hivyo basi ni jukumu la viongozi kuonyesha nia ya kutumia mamlaka waliyopewa kwa manufaa ya raia. Tume ya maadili ya kupambana na ufisadi (EACC) kufikia sasa imeonekana kufanya kazi nzuri kwa kuwasaka na kuwashtaki magavana walio mamlakani na wengine walioondoka, kwa kushukiwa kufuja mali za umma. Tungependa asasi zote zinazohusika na masuala ya kupambana na uhalifu, pamoja na wadau wengine katika jamii wenye nia njema kwa wananchi wasifumbie macho maovu yanayotendwa katika kaunti zetu.

Prefer Calling Amobi Group of Examiners @ 0743 333 000 or 0706 851 439 for Marking Schemes

Nchi hii inatawalwa kwa misingi ya kisheria na hivyo basi hakuna sababu kumhurumia kiongozi yeyote anayekiuka sheria anapokuwa mamlakani kwa msingi wa mamlaka aliyoshikilia. Ni kupitia adhabu kali za kisheria pekee ambapo tutafanikiwa kukomesha uongozi mbaya kwani kama wananchi watakuwa wakisubiri kuwaadhibu wahusika kwa kuwaondoa mamlakani pekee, watakuwa wametoa nafasi ya ufujaji kwa viongopzi wapya kila miaka mitano.

Maswali

a. Fupisha ujumbe wa aya tatu za kwanza kwa maneno 80. (al.8, 1 ya mtiririko)

Matayarisho

……

……

……

……

……

……

Jibu

……

……

……

……

……

……

……

……

……

……

……

……

……

……

……

Prefer Calling Amobi Group of Examiners @ 0743 333 000 or 0706 851 439 for Marking Schemes

b.Fupisha aya mbili za mwisho kwa maneno 70. (al.7, 1 ya mtiririko)

Matayarisho

……

……

……

……

……

……

……

……

……

Jibu

……

……

……

……

……

……

……

……

……

……

……

……

……

……

……

……

……

……

Prefer Calling Amobi Group of Examiners @ 0743 333 000 or 0706 851 439 for Marking Schemes

SEHEMU YA C (ALAMA 40)

a.i) Elezea sifa mbili za sauti /e/. **(al.1)**

……

……

……

ii) Elezea maana ya sauti mwambatano. **(al.1)**

……

……

……

iii) Onyesha mfano mmoja wa sauti mwambatano. **(al.1)**

……

……

……

b. i) Elezea maana ya kiimbo. **(al.1)**

……

……

ii) Elezea umuhimu wake. **(al.2)**

……

……

……

……

c. Onyesha miundo miwili tofauti ya nomino zipatikanazo katika ngeli ya U-ZI. **(Al.1)**

……

……

……

d. Bainisha mazingira mawili ambapo alama ya kiulizi (?) hutumika. **(al.1)**

……

……

……

……

Prefer Calling Amobi Group of Examiners @ 0743 333 000 or 0706 851 439 for Marking Schemes

e.Bainisha aina mbili za silabi katika neno; Alhamisi. **(al.2)**

……

……

……

……

f. Yakinisha katika wingi. **(al.1)**

Mwalimu hakumwadhibu mwanafunzi.

……

……

g.Andika sentensi ifuatayo katika wakati uliopita hali timilifu. **(al.1)**

Mtoto analala

……

……

h. Onyesha aina mbili za mofimu katika sentensi ifuatayo. **(al.2)**

Mimi ninasoma vizuri

……

……

……

i. Tunga sentensi yenye muundo ufuatao. **(al.3)**

RN+RT+RN

……

……

……

j. Changanua sentensi ifuatayo kwa njia ya mishale. **(al.3)**

Mbaywayu na korongo ni ndege ambao huishi.

……

……

……

……

……

……

Prefer Calling Amobi Group of Examiners @ 0743 333 000 or 0706 851 439 for Marking Schemes

k. Bainisha aina za shamirisho. **(al.3)**

Mwalimu alimwandikia mwanafunzi maagizo kwa kalamu.

……

……

……

……

……

l. Bainisha aina ya vishazi katika sentensi. **(al.2)**

Mwanafunzi aliyekuwa akisoma amechoka.

……

……

……

……

m. Andika visawe vya maneno haya. **(al.2)**

i. Heshima –……

ii. Ruhusa -……

n. Eleza maana mbili ya fungu hili. **(al.2)**

Jua lile

……

……

……

……

o.Onyesha matumizi ya kiambishi 'ku' katika sentensi ifuatayo. **(al.2)**

Opiyo atakutengenezea mpini wa jembe na kukuletea kwako.

……

……

……

……

Prefer Calling Amobi Group of Examiners @ 0743 333 000 or 0706 851 439 for Marking Schemes

p. Andika sentensi hii upya ukitumia vinyume vya maneno yaliyopigiwa mstari. **(al.2)**

Mwanafunzi <u>aliketi</u> kisha <u>akakitega</u> kitendawili.

……

……

……

……

q. Tunga sentensi moja moja ukitumia vitenzi hivi kwa kauli uliyopewa. **(al.2)**

i. La – (tendeana)

ii. Vaa - (tendwa)

……

……

……

……

r. Andika kwa msemo wa taarifa. **(al.2)**

"Tusipofanya kazi yetu kwa bidii na kujitegemea, tutabaki kuwa watumwa katika nchi yetu," Rais alisema.

……

……

……

……

s. Tumia 'O' rejeshi kama <u>kiwakilishi</u>. **(al.1)**

Msichana ambaye huja shuleni mwetu ni mwanasheria.

……

……

t. Bainisha aina ya virai vilivyopigiwa mstari. **(al.2)**

Mhadhara <u>huo tata</u> ulitolewa <u>jana jioni</u>.

……

……

……

……

Prefer Calling Amobi Group of Examiners @ 0743 333 000 or 0706 851 439 for Marking Schemes

SEHEMU YA D (ALAMA 10)

a) Taja lahaja zozote nne katika kiswahili. **(al.4)**

……

……

……

……

……

……

b) Elezea nadharia zozote tatu ambazo huelezea chanzo cha kiswahili. **(al.3)**

……

……

……

……

……

c) Fafanua sifa zozote tatu za salamu katika mazungumzo. Toa sababu tatu.

……

……

……

……

……

……

……

Prefer Calling Amobi Group of Examiners @ 0743 333 000 or 0706 851 439 for Marking Schemes

BRILLIANT STUDENTS

FORM 3 END TERM 3 SERIES 3 EXAMS

JINA: ……

SHULE: ……

NAMBARI YA USAJILI: …… SAHIHI: …… TAREHE: ……

KIDATO CHA TATU

102/3

KISWAHILI

KARATASI YA 3

FASIHI

MUHULA WA TATU

MUDA: Saa 2 ½

MAAGIZO

a) Jibu maswali **manne** pekee.

b) Swali la **kwanza** ni la **LAZIMA**.

c) Chagua maswali mengine **matatu** kutoka sehemu **nne** zilizobaki yaani; Ushairi, Riwaya,Hadithi fupi na Tamthilia.

d) Usijibu maswali **mawili** kutoka sehemu moja.

e) Kila swali lina **alama 20**

f) Majibu yote yaandike kwa lugha ya **Kiswahili.**

Prefer Calling Amobi Group of Examiners @ 0743 333 000 or 0706 851 439 for Marking Schemes

SEHEMU YA A: FASIHI SIMULIZI

1.

a) Taja mifano minane ya vipera vya utanzu wa semi katika fasihi simulizi. **(alama4)**

b) Fafanua sifa zozote tatu za mawaidha katika fasihi simulizi **(alama3)**

c) Eleza umuhimu tatu wa ngomezi. **(alama3)**

d) Eleza istilahi hizi za fasihi simulizi. **(alama3**

i) Maghani

ii) Mapisi

iii) Misimu/simo

e) Fafanua sifa zozote tatu ambazo mtambaji wa hadithi anastahili kuwa nazo. **(alama3)**

f) Taja methali zozote mbili zilizo na dhana ya tashibihi. **(alama2)**

g) Eleza sifa zozote mbili za nyimbo. **(alama2)**

SEHEMU YA B: USHAIRI

2.Soma shairi lifuatalo kisha ujibu maswali yanayofuata

Mkata ni mkatika,harithi hatoridhiwa
Sina ninalolishika,wala ninalochukuwa
Mlimwengu kanipoka, hata tone la muruwa!
Mrithi nini wanangu?

Sina ngo'mbe sina mbuzi,sina konde sina buwa
Sina hata makaazi,mupasayo kuyajuwa
Sina mazuri makuzi,jinsi nilivyoachwa
Mrithi nini wanangu?
Sina kazi sina bazi ila wingi wa shakawa
Sina chembe ya majazi mno ni kukamuliwa
Nakwa'cheni upagazi,ngumu kwenu ku'tuwa
Mrithi nini wanangu?

Prefer Calling Amobi Group of Examiners @ 0743 333 000 or 0706 851 439 for Marking Schemes

Sina sikuachi jina,mkata hatasifiwa
Hata nifanye la mana,mno mi kulaumiwa
Poleni wangu sana,sana kwenu cha kutowa
Mrithi nini wanangu?

Sina leo sina jana,sina kesho kutwaliwa
Sina zizi sina shina,wala tawi kuchipuwa
Sina wanangu mi sina,sana la kuacha kuraduwa
Mrithi nini wanangu?

Sina utu sina haki,mila yangu meuliwa
Nyuma yangu ili dhiki,na mbele imakaliwa
N'na wana na milik,hadi nitakapofukiwa
Mrithi nini wanangu?

Sina ila kesho kwenu,wenyewe kulongowa
Muwane kwa nyinyi mbinu,mwende pasi kupumuwa
Leo siyo kesho yenu,kama mutajikamuwa
Mrithi nini wananngu?

MASWALI

a) Taja mambo yoyote mawili ambayo mtunzi angewarithisha wanawe. **(alama2)**

b) Eleza sababu ya mtunzi kutoweza kuwarithisha wanawe. **(alama3)**

c) Andika ubeti wa nne kwa lugha nathari. **(alama4)**

d) Dondoa mifano miwili miwili ya: **(alama2)**

i. Inkisari

ii. Tabdila

e) Chambua shairi hili kwa upande wa:

i. Dhamira **(alama2)**

ii. Muundo **(alama4)**

Prefer Calling Amobi Group of Examiners @ 0743 333 000 or 0706 851 439 for Marking Schemes

f) Eleza maana ya vifungu vifuatavyo kama vilivyotumiwa katika shairi. **(alama3)**

i. Mlimwengu kanipoka

ii. Sina konde sina buwa.

iii. Wingi wa shakawa.

SEHEMU YA C: RIWAYA

A.K Matei: Chozi la Heri

3**.** Malezi ya watoto katika riwaya ya Chozi la Heri ndicho kitovu cha ufanisi na matatizo yote yanayowapiku watoto. Jadili **(alama 20)**

4. "…, Di, ni mimi… niko hai. Auntie Sauna alishikwa na polisi. ''

a) Liweke dondoo hili katika muktadha wake **(alama 4)**

b) Fafanua sifa za msemaji. **(alama 6)**

c) Eleza tamathali moja ya lugha iliyotumika katika dondoo hii. **(alama2)**

d) Sauna alishikwa na polisi? Elezea kikamilifu **(alama 8)**

SEHEMU YA: D HADITHI FUPI

A.Chokocho na D.Kayanda:

Tumbo Lisiloshiba na Hadithi Nyinginezo

5. "Penzi lenu na nani? . . . . Mgomba changaraweni haupandwi ukamea. Potelea mbali mkate wee!"

a) Eleza muktadha wa dondoo hii. **(alama 4)**

b) Taja na ufafanue mbinu mbili za lugha zilizotumiwa katika dondoo hili. **(alama 4)**

c) Onyesha vile maudhui ya utabaka yanavyojitokeza katika hadithi nzima. **(alama 6)**

d) Eleza sifa sita za mzugumzaji kwenye dondoo. **(alama 6)**

6. Kwa kurejelea hadithi zozote tano katika diwani ya, 'Tumbo lisiloshiba na hadithi nyingine.' Jadili maudhui ya nafasi ya wazazi katika malezi. **(alama 20)**

SEHEMU YA E: TAMTHILIA

P.Kea: Kigogo

7. Tamthilia ya "Kigogo" ni kioo cha uhalisia wa maisha ya jamii nyingi za Kiafrika. Thibitisha.

Prefer Calling Amobi Group of Examiners @ 0743 333 000 or 0706 851 439 for Marking Schemes

BRILLIANT STUDENTS

FORM 3 END TERM 3 SERIES 3 EXAMS

NAME: ……..

SCHOOL: ……...

ADM NO: …… **SIGN:** …… **DATE:** ……...

FORM 3

MATHEMATICS PP1

TIME: $2\frac{1}{2}$ **HOURS**

END OF TERM 3 EXAMINATIONS

INSTRUCTIONS TO CANDIDATES

1.Write your name, admission number and school in the spaces provided.
2.This paper consists of two sections; **Section I** and **Section II.**
3.Answer ALL the questions in Section I and ONLY FIVE questions in Section II.
4.All answers and working must be written on the question paper in the spaces provided below each question.
5.Show all the steps in your calculations, giving your answer at each stage in the space provided below each question.
6.Marks may be given for correct working even if the answer is wrong.
7.Non programmable silent electronic calculators and **KNEC** mathematical tables may be used except where stated otherwise.
8.Candidates should check the question paper to ascertain that all pages are printed as indicated and that no questions are missing.

FOR EXAMINERS USE ONLY

SECTION I

Question	**1**	**2**	**3**	**4**	**5**	**6**	**7**	**8**	**9**	**10**	**11**	**12**	**13**	**14**	**15**	**16**	**TOTAL**
Marks																	

SECTION II

Question	**17**	**18**	**19**	**20**	**21**	**22**	**23**	**24**	**TOTAL**
Marks									

Grand Total

Prefer Calling Amobi Group of Examiners @ 0743 333 000 or 0706 851 439 for Marking Schemes

SECTION I (50 Marks)

Answer all the questions in the spaces provided.

1. Without using tables or a calculator evaluate; **(3 marks)**

$$\frac{-24 \div -8 \times 5 - (-30)}{-16 \times 4 \div 2 + (-8)}$$

2. Factorize completely $3x^2 - 2xy - y^2$ **(2 marks)**

3. A Kenyan bank buys and sells foreign currencies as shown below.

Currency	**Buying (Ksh)**	**Selling (Ksh)**
1 Hong Kong dollar	9.84	9.87
100 Japanese yen	76.08	76.12

A tourist arrived in Kenya with 100 500 Hong Kong Dollars and changed the whole amount to Kenyan shillings. While in Kenya he spent Ksh. 430 897 and changed the balance to Japanese yen before leaving for Tokyo. Calculate the amount in Japanese Yen that he received. **(3 marks)**

Prefer Calling Amobi Group of Examiners @ 0743 333 000 or 0706 851 439 for Marking Schemes

4.Use logarithm tables to evaluate **(4 marks)**

$$\sqrt[3]{\frac{0.7432 \times 80.23}{(4.125)^2}}$$

5.The sides of a triangle were measured to 1 decimal as 6.5cm, 7.4cm and 8.2cm respectively. Calculate the percentage error in its perimeter **(4 marks)**

6.Line L_1 passes through points $A(2,-4)$ and $B\ (6,-8)$. Find the equation of the line L_2, the perpendicular bisector of AB leaving your answer in the form $ax + by + c = 0$. **(3 marks)**

Prefer Calling Amobi Group of Examiners @ 0743 333 000 or 0706 851 439 for Marking Schemes

7. In the figure below, O is the centre of the circle. AC = 6 cm, BC = 9 cm and $\angle ACB = 132°$

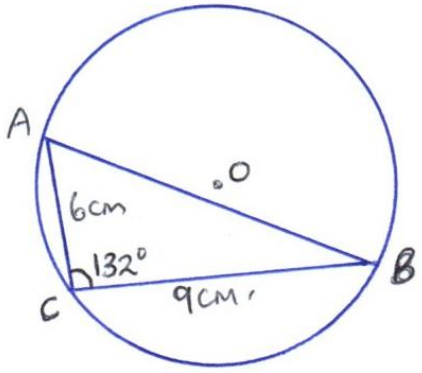

a) Calculate length AB correct to 2 decimal places. **(2 marks)**

b) Calculate the area of the circle. **(2 marks)**

8. Evalute, without using mathematical tables or the calculator, the expression. **(3 marks)**

$2\log_{10}5 - \frac{1}{2}\log_{10}16 + 2\log_{10}40$

Prefer Calling Amobi Group of Examiners @ 0743 333 000 or 0706 851 439 for Marking Schemes

9. Rationalize the denominator and leave your answer in surd form. **(3 marks)**

$$\frac{3}{2\sqrt{5}+\sqrt{2}}$$

10. Solve the quadratic equation $6a^2 = 5a + 4$ using completing the square method. **(3 marks)**

11. The hire purchase terms of a cupboard is a deposit of Ksh 4,400 and six monthly installments of Ksh 900 each. The hire purchase price is 175% of the cost price while the cash price is 25% more than the cost price .Calculate the cash price of the cupboard. **(3 marks)**

Prefer Calling Amobi Group of Examiners @ 0743 333 000 or 0706 851 439 for Marking Schemes

12. Construct triangle PQR in which $PQ = QR = 5\ cm$ and $\angle PRQ = 35°$. Measure PR. **(3 marks)**

13. **A** and **B** are two matrices. If $\mathbf{A} = \begin{bmatrix} 1 & 2 \\ 4 & 3 \end{bmatrix}$ find B given that $\mathbf{A^2} = \mathbf{A} + \mathbf{B}$. **(3 marks)**

14. Make n the subject of the formulae in $A = P\left(1 + \frac{r}{100}\right)^n$ **(3 marks)**

Prefer Calling Amobi Group of Examiners @ 0743 333 000 or 0706 851 439 for Marking Schemes

15. Solve the following inequality and show your solution on a number line. **(3 marks)**

$4x - 3 \leq \frac{1}{2}(x + 8) < x + 5$

16. The sixth term of an arithmetic progression is 27 and the tenth term is 43. Find the 16th term. **(3 marks)**

SECTION II (50 Marks)

Answer ONLY five the questions in the spaces provided.

17. Mr. Omwega is employed. His basic salary is Kshs. 21, 750 and is entitled to a house allowance of Kshs 15, 000 and a travelling allowance of Kshs 8, 000 per month. He also claims a family monthly relief of Kshs 1, 056 per month. Other deductions are;

Union dues Kshs 200 and

Co-operative shares Kshs 4, 500 per month.

The table below shows the tax rates for the year.

Income (Kshs per annum)	Tax rates
1 – 116, 600	10%
116, 161 – 225, 600	15%
225, 601 – 335, 040	20%
335, 041 – 444, 480	25%
Over 444, 480	30%

Prefer Calling Amobi Group of Examiners @ 0743 333 000 or 0706 851 439 for Marking Schemes

Calculate;

a) Mr. Omwega's annual taxable income. **(2 marks)**

b) The tax paid by Mr. Omwega in the year. **(6 marks)**

c) Mr. Omwega's net income per month. **(2 marks)**

Prefer Calling Amobi Group of Examiners @ 0743 333 000 or 0706 851 439 for Marking Schemes

18. a) Complete the table below giving your values correct to 2 decimal places. **(2 marks)**

$x°$	-90	-75	-60	-45	-30	-15	0	15	30	45	60	75	90
$3\cos 2x°$	-3	-2.6		0	1.5		3	2.6		0	-1.5		-3
$\sin(2x+30°)$	-0.5		-1	-0.87		0	0.5		1		0.5	0	-0.5

b) On the grid provided, draw on the same axes the graph of $y = 3\cos 2x°$ and $y = \sin(2x + 30°)$ for interval $-90° \leq x \leq 90°$. Take the scale 1 cm represent $15°$ on x – axis and 2 cm represent 1 unit on the y – axis.

. **(4 marks)**

c) Use the graph in (b) above to solve the equation;

i. $3\cos 2x° = \sin(2x + 30°)$ **(2 marks)**

ii. $6\cos 2x° + 5 = 0$ **(2 marks)**

Prefer Calling Amobi Group of Examiners @ 0743 333 000 or 0706 851 439 for Marking Schemes

19. Triangle ABC has coordinates $A\ (-4,1), B\ (-1,2)$ and $C\ (-3,4)$.

a) On the grid provided, draw triangle ABC. **(1 mark)**

b) Triangle $A'B'C'$ is the image of triangle ABC under an enlargement with scale factor -1 about the origin. On the same grid draw triangle $A'B'C'$ and state its coordinates. **(3 marks)**

c) Triangle $A''B''C''$ is the image of triangle $A'B'C'$ under a rotation of $-90°$ about the origin. On the same grid draw triangle $A''B''C''$ and state its coordinates. **(3 marks)**

d) Under a certain translation T, the image of points $A''B''C''$ are mapped onto triangle $A'''B'''C'''$ such that point A'' is mapped onto $A'''(2,3)$.

i. Find the translation T. **(1 mark)**

ii. Find the coordinates of the image points B''' and C''' and plot triangle $A'''B'''C'''$ on the same grid. **(2 marks)**

Prefer Calling Amobi Group of Examiners @ 0743 333 000 or 0706 851 439 for Marking Schemes

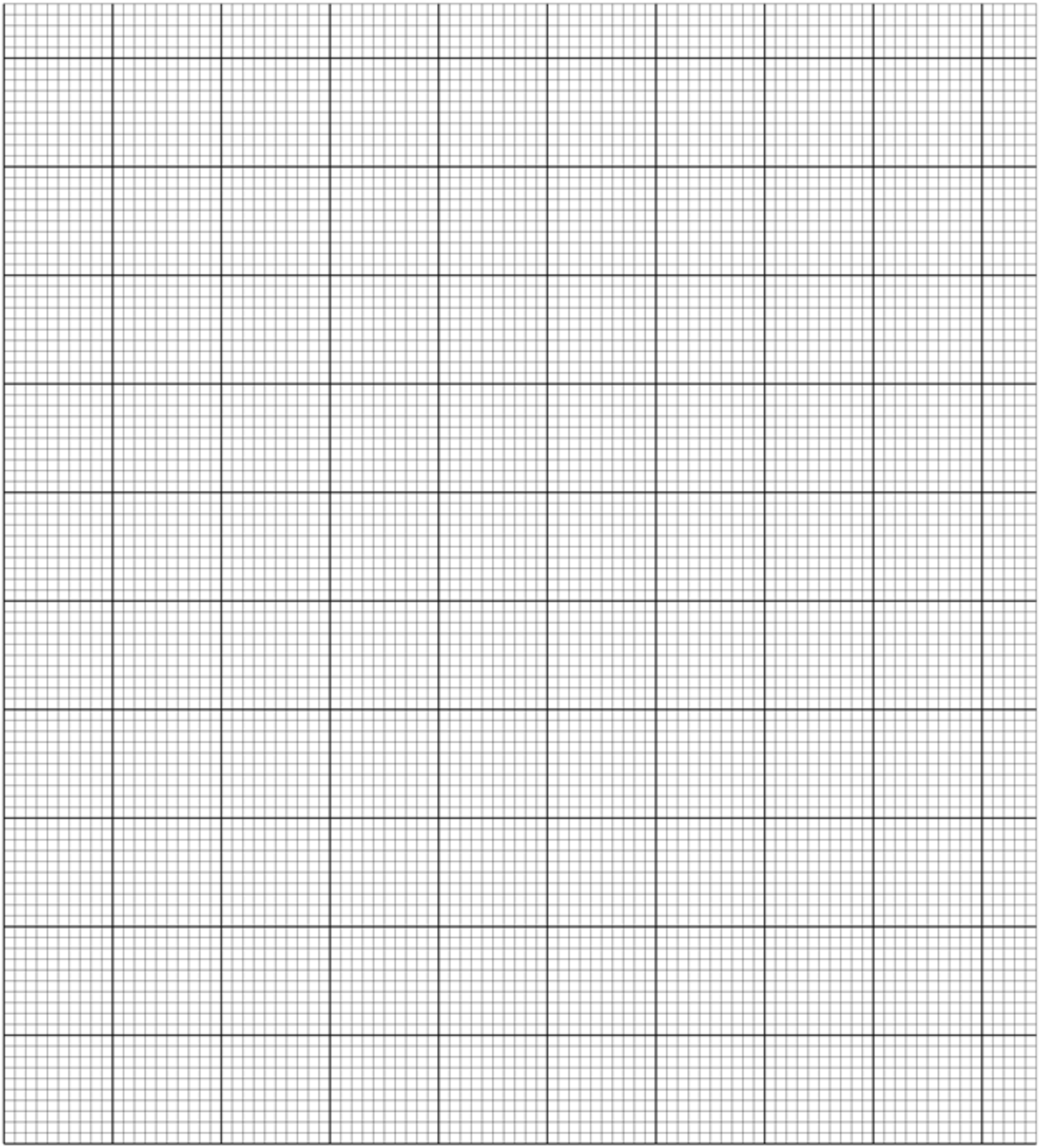

Prefer Calling Amobi Group of Examiners @ 0743 333 000 or 0706 851 439 for Marking Schemes

20. A parent has two children whose age difference is 5 years. Twice the sum of the ages of the two children is equal to the age of the parent.

a) Taking x to be the age of the elder child, write an expression for

i. The age of the younger child. **(1 mark)**

ii. The age of the parent **(1 mark)**

b) In twenty years' time, the product of the children's age will be 15 times the age of their parent

i. Form an equation in x and hence determine the present possible ages of the older child**.** **(4 marks)**

ii. Find the present possible ages of the parent**.** **(2 marks)**

iii. Determine the possible ages of the younger child in twenty years' time. **(2 marks)**

Prefer Calling Amobi Group of Examiners @ 0743 333 000 or 0706 851 439 for Marking Schemes

21. The masses of 40 students were measured to the nearest kilogram and recorded as shown below.

52	58	54	51	59	53	56	51
43	41	53	58	54	65	58	59
49	63	49	49	47	45	46	52
52	55	52	55	49	57	53	63
42	45	46	48	60	49	48	53

a) Use this data to complete the table below. (4 marks)

Kg	Class mid point x	cy f	fx
$41-45$			
$46-50$	48	10	480
$51-55$			
$56-60$			
$61-65$	63	3	189
		$\sum f = 40$	

b) Calculate ;

i. The mean mass. **(2 marks)**

ii. The median mass **(2 marks)**

c) Draw a frequency polygon for the distribution. **(2 marks)**

Prefer Calling Amobi Group of Examiners @ 0743 333 000 or 0706 851 439 for Marking Schemes

22. The figure below shows two pulleys with centres A and B of radii 9 cm and 6 cm respectively. C and D are contact points of the belt with the pulleys. The distance between the centres of the two pulleys is 50 cm. a belt is tied around the two pulleys as shown.

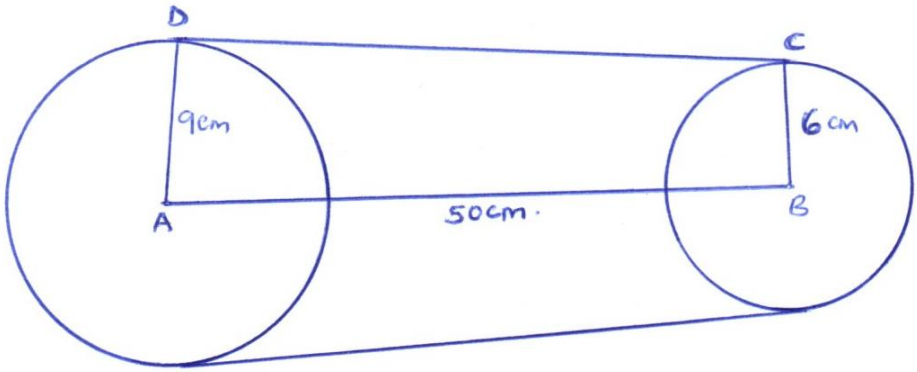

Calculate,

a) Length DC **(2 marks)**

b) The length of arc DE **(3 marks)**

c) The length of arc CF **(3 marks)**

d) The total length of the belt. **(2 marks)**

Prefer Calling Amobi Group of Examiners @ 0743 333 000 or 0706 851 439 for Marking Schemes

23. The figure below shows a rectangle attached to a semi-circle

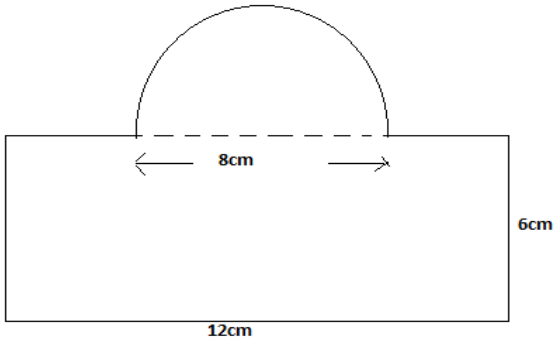

a) Calculate;

i. the area of the figure **(3marks)**

ii. the perimeter of the figure **(3 marks)**

b) If the figure represents a cross-section of a steel girder of length 9m, determine the volume of the steel girder in cubic centimetres **(2 marks)**

c) If the mass of the steel girder is 306kg, calculate its density in g/cm^3. **(2 marks)**

Prefer Calling Amobi Group of Examiners @ 0743 333 000 or 0706 851 439 for Marking Schemes

24. Five towns P,Q, R S and T are situated such that Q is 200 km east of P. R is 300 km from Q on a bearing of 150° from Q. S is 350 km on a bearing of 240° from R. T is 250 km from S and its bearing from P is 160°.

a) Using a scale of 1 cm to represent 50 km, draw a diagram representing the position of the towns. **(5 marks)**

b) From the diagram, determine:

i. The distance in km from P to T. **(1 mark)**

ii. The bearing of S from Q. **(1 mark)**

c) A plane heading to town R takes off from town P and flies upward at a constant angle which is less than 90°. After flying a distance of 100 km in the air, it sees a town R at angle of depression of 50°. By scale drawing, find the horizontal distance of the plane from R at this point. **(3 marks)**

Prefer Calling Amobi Group of Examiners @ 0743 333 000 or 0706 851 439 for Marking Schemes

BRILLIANT STUDENTS

FORM 3 END TERM 3 SERIES 3 EXAMS

NAME: ……

SCHOOL: ……

ADM NO: …… **SIGN:** …… **DATE:** ……

END OF TERM 3

FORM 3

MATHEMATICS PAPER 2.

TIME: 2HRS 30MIN

Instructions.

Answer all questions in this section in the spaces provided.

SECTION A : 50MKS.

1.Use mathematical tables to evaluate: **(4mks)**

$$\frac{3\sqrt{0.8423 \times 72.5}}{930.5}$$

Prefer Calling Amobi Group of Examiners @ 0743 333 000 or 0706 851 439 for Marking Schemes

2.After how many y years would kshs. 15000 amount to ksh 24015.50 at a rate of 16% p.a. **(3mks)**

3.Three years ago, Juma was three time as old as Ali. In two years time, the sum of their ages will be 62. Determine their present ages. **(3mks)**

4.Evaluate:

$^{1}/_{3}$ of (2 ¾ - 5 ½) x 3 $^{6}/_{7} \div {}^{9}/_{4}$ **(3mks)**

5.Find the height of an isosceles triangle if the equal sides are each 26cm and the base is 48cm long. **(2mks)**

Prefer Calling Amobi Group of Examiners @ 0743 333 000 or 0706 851 439 for Marking Schemes

6. A straight line L1 has a gradient of $-\frac{1}{2}$ and passes through the point P(-1, -3). Another straight line L2 passes through the points Q(1,-3) and R (4,5), find:

a. The equation of L1. **(2mks)**

b. The equation of L2. **(2mks)**

7. Solve the following quadratic equation by completing the square. **(3mks)**

$$2x^2 - 5x + 3 = 0$$

8. Make A the subject of the formula. **(3mks)**

$$T = \frac{2m}{n}\sqrt{\frac{L - A}{3K}}$$

Prefer Calling Amobi Group of Examiners @ 0743 333 000 or 0706 851 439 for Marking Schemes

9. In the figure below, chords AB and XY interest in a circl at R. Given that AR = 4cm, XR = 5cm and RY=3cm. find AB. **(2mks)**

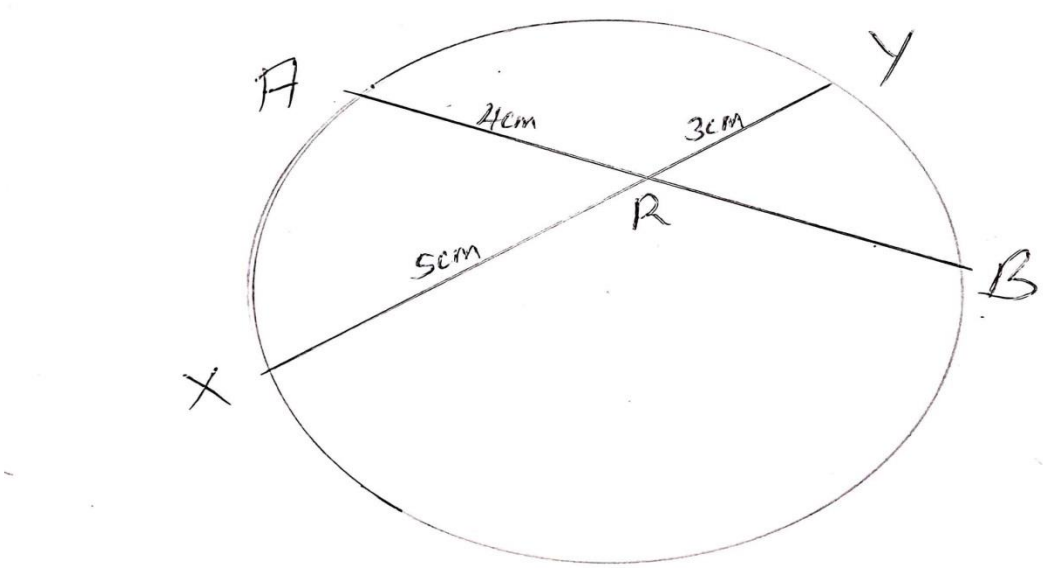

10. Given the matrix $M = \begin{pmatrix} 3 & -5 \\ 5 & 2 \end{pmatrix}$ Find the inverse of M and hence or otherwise, solve the simultaneous equations. **(3mks)**

$3x - 5y = -9$

$5x - 2y = 16$

11. Solve the equation equation equation $\frac{2}{x-1} - \frac{1}{x+2} = \frac{1}{x}$ **(3mks)**

Prefer Calling Amobi Group of Examiners @ 0743 333 000 or 0706 851 439 for Marking Schemes

12. Solve for x in the equation: **(3mks)**

$\text{Log } (x-1) = \log 12 - \log (x-2)$

13. Using binomial expression, expand and simplify $(1 - 2x)^3$ up to the term x^3. **(1mk)**

b. Use the simplified expansion in (a) above to calculate to 4 decimal places the approximate value of $(0.98)^3$ **(3mks)**

14. A trader bought two brands of sugar labeled Grade A and Grade B. Grade A sugar costs sh 60 per kg and grade B sugar costs sh 50 per kg. he mixed them in a ratio such that after selling the mixture at sh 81 per kg, he made a profit of 50%. Determine the ratio in which he mixed grade A sugar to grade B. **(3mks)**

Prefer Calling Amobi Group of Examiners @ 0743 333 000 or 0706 851 439 for Marking Schemes

15. A quantity P is partly constant and partly varies as the square of Q when Q=2, P= 40 and when Q=3 P=65. Determine the value of P when Q=4. **(3mks)**

16. A cold water tap can fill a bath in 6 minutes while a hot water tap can fill it in 12 minutes. The drainage pipe can empty the bath in 8 minutes. All the three are opened fully for 3 minutes and then the hot water tap is closed. How many more minutes will it take to fill the bath? **(4mks)**

SECTION B (50 MKS)

Answer any five questions in this section.

17. Personal tax relief p.a is sh 12672 p.a

Income (K£ per annum)	Rate (Sh per pound)
1-5808	2
5809-11280	3
11281-16752	4
16753-22224	5
Excess over 22224	6

Prefer Calling Amobi Group of Examiners @ 0743 333 000 or 0706 851 439 for Marking Schemes

a.Mr. Omondi earns a basic salary of sh 15000 per month. In addition, he gets a medical allowance of sh 2400 and a house allowance of sh 12000. Use the tax brackets above to calculate the tax he pays in a year. **(10mks)**

Prefer Calling Amobi Group of Examiners @ 0743 333 000 or 0706 851 439 for Marking Schemes

18. A student at Anestar school tossed a coin three times and recorded the results on every successive toss.

a) By use of a tree diagram, show all the possible outcomes. **(3mks)**

b) Find the probability of getting:

i. One head **(1mk)**

ii. Two heads and a tail, in the order. **(1mk)**

iii. Two heads and a tail, in any order. **(1mk)**

Prefer Calling Amobi Group of Examiners @ 0743 333 000 or 0706 851 439 for Marking Schemes

iv. Three heads. **(1mk)**

v. At least one head. **(1mk)**

vi. No head. **(2mks)**

19. The diagram below shows a frustrum made by cutting off a small cone on a plane parallel to the base of the original cone. The frustum represents a bucket with the open – end diameter of 28cm and the bottom diameter of 21cm. The bucket is 20cm deep as shown. Calculate to one decimal place, the capacity of the bucket in litres. **(10mks)**

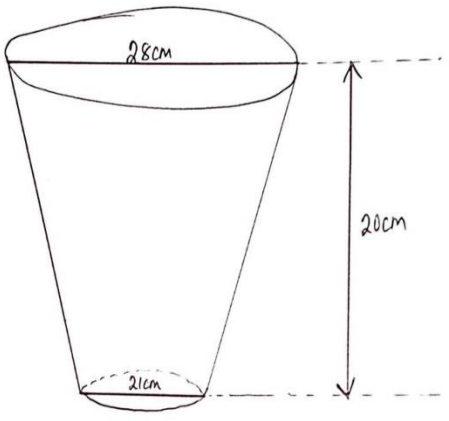

Prefer Calling Amobi Group of Examiners @ 0743 333 000 or 0706 851 439 for Marking Schemes

20. Town B is 180km on a bearing of 050° from town A. another town C is on a bearing of 110° from town A and on a bearing of 150° from town B. A fourth town D is 240km on a bearing of 320° from town A. using a scale drawing 1cm to represent 30km, calculate to the nearest kilometer:

a) The distance AC **(2mks)**

b) The distance CD **(2mks)**

c) The distance BC. **(2mks)**

21. In the figure below OPQ is a triangle in which OS= $^{1}/_{3}$ OP and OR = $^{1}/_{3}$OQ. T is a point on QS such that QT = ¾ QS.

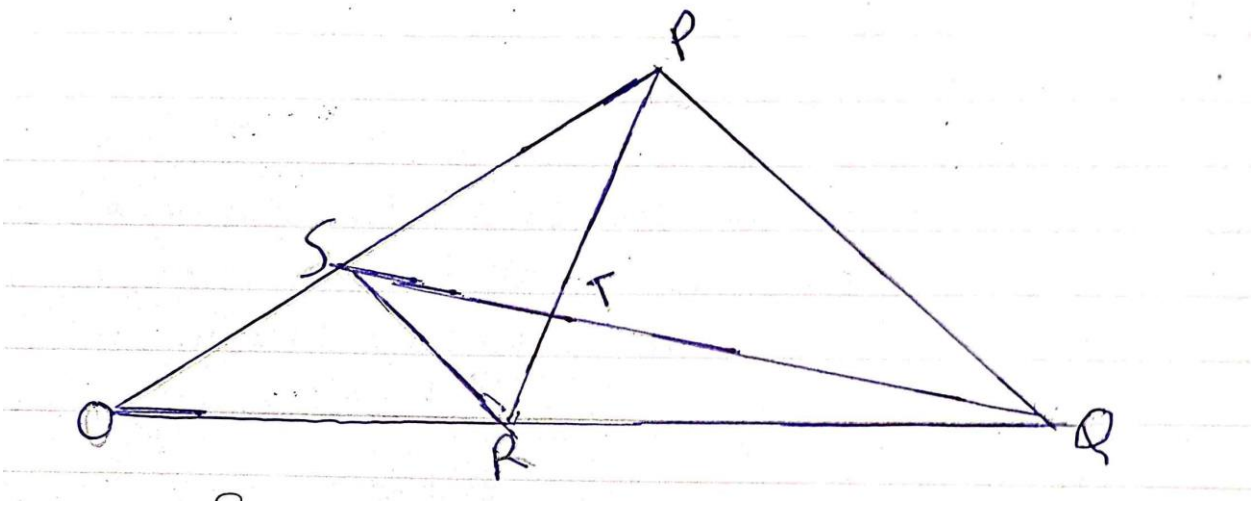

Prefer Calling Amobi Group of Examiners @ 0743 333 000 or 0706 851 439 for Marking Schemes

a) Given that OP = p and OQ=q, express the following vectors in terms of p and q.

i. SR **(2mks)**

ii. QS **(2mks)**

iii. PT **(2mks)**

iv. TR **(2mks)**

b) Hence or otherwise show that the points P,T and R are collinear. **(2mks)**

Prefer Calling Amobi Group of Examiners @ 0743 333 000 or 0706 851 439 for Marking Schemes

22. The first term of an arithmetic progression is 2, the sum of the first 8 terms of the AP is 240.

i. Find the common difference of the AP. **(2mks)**

ii. Given that the sum of the first n terms of the AP is 1560, find n. **(2mks)**

b. The 3rd, 5th and 8th term of another AP form the first three terms of a G.P if the common difference of the AP is 3. Find

i. The first term of G.P **(4mks)**

Prefer Calling Amobi Group of Examiners @ 0743 333 000 or 0706 851 439 for Marking Schemes

ii. The sum of the first 9 terms of the GP to 4 s.f **(2mks)**

23. James is a sale executive earning a salary of ksh. 20,000 and commission of 8% for the sales in excess of kshs. 100,000. If in January 2010 she earned a total of ksh. 48,000 in salaries and commissions.

a. Determine the amount of sales he made in the month. **(4mks)**

b. If the total sales in the month of February and March increased by 18% and they dropped by 25% respectively. Calculate:

i. James's commission in the month of February. **(3mks)**

ii. His total earning in the month of March. **(3mks)**

Prefer Calling Amobi Group of Examiners @ 0743 333 000 or 0706 851 439 for Marking Schemes

24. At the beginning of the year 2000, Gachago bought two houses, one in Thika and another one in Nakuru each at sh. 1,240,000. The value of the house in Thika appreciated at a rate of 12% p.a.

a. Calculate the value of the house in Thika after 9 years to the nearest shillings. **(2mks)**

b. After n years, the value of the house in Thika was 2,741,245 while the value of the house in Nakuru was 2917231.

i. Find n **(4mks)**

ii. Find the annual rate of appreciation of the house in Nakuru. **(4mks)**

Prefer Calling Amobi Group of Examiners @ 0743 333 000 or 0706 851 439 for Marking Schemes

BRILLIANT STUDENTS

FORM 3 END TERM 3 SERIES 3 EXAMS

NAME: ……

SCHOOL: ……

ADM NO: …… SIGN: …… DATE: ……

FORM 3 END OF TERM 3 EXAMINATION

231/ 1 - Physics - Paper 1 (Theory)

Time -:2 hours

INSTRUCTIONS TO CANDIDATES

(i) *Write your **name, admission number** and **class** in the spaces provided above.*

(ii) ***Sign and write the date** of examination in the spaces provided above.*

(iii) *This paper consists of **TWO** sections: **A** and **B**.*

(iv) *Answer **ALL** the questions in sections **A** and **B** in the spaces provided.*

(v) ***ALL** working **MUST** be clearly shown.*

(vi) *Non-programmable silent electronic calculators and KNEC mathematical tables may be used.*

(vii) ***Candidates should check the question paper to ascertain that all the pages are printed as indicated and that no questions are missing**.*

For Examiner's Use Only

Section	Question	Maximum Score	Candidate's Score
A	1 – 12	25	
	13	09	
	14	12	
	15	10	
	16	10	
	17	07	
	Total Score	80	

Prefer Calling Amobi Group of Examiners @ 0743 333 000 or 0706 851 439 for Marking Schemes

SECTION A (25 MARKS)

1.The diagram below sshows a section of a micrometer screw gauge . Give the reading shown **(2mks)**

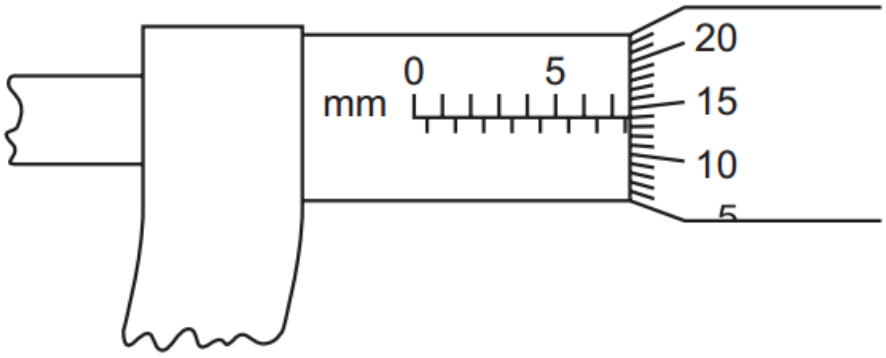

2.In an experiment to determine the density of liquid X, a student obtained the following date:

- ***Mass an empty density bottle = 55.0g.***
- ***Mass of the density bottle + water = 80.0g.***
- ***Mass of the density bottle + liquid x = 70g***.

Determine the density of liquid x (density of water is 1000kg/m3) **(3mks)**

3.(a) State the Pascals principle. **(1mk)**

……

……

……

Prefer Calling Amobi Group of Examiners @ 0743 333 000 or 0706 851 439 for Marking Schemes

(b) If the cross-sectional area of the output piston in a hydraulic device is ten times that of the imput pistons area, by how much will the device multiply the input force? **(1mk)**

4. Two beakers contains equal volumes of water and ethanol. A crystal of potassium permanganate is placed in the liquids at the bottom of each of the beakers. In which beaker will the diffusion be faster given that the two liquids are at the same temperature? Explain. **(2mks)**

……

……

……

……

5. The figure 4.0 shows a rod made of wood on one end and metal on the other end suspended freely with a piece of thread so that it is in equilibrium.

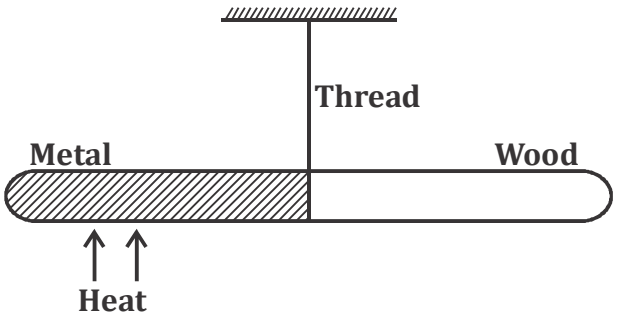

The side made of metal is heated with a bunsen burner flame. State with a reason, the side to which the rod is likely to tilt. **(2 marks)**

……

……

……

……

Prefer Calling Amobi Group of Examiners @ 0743 333 000 or 0706 851 439 for Marking Schemes

6.Clouds consist of very small drop of water. Explain why although water is much denser than air clouds do not seem to fall. **(1mk)**

……

……

……

7.Dams which hold water reservoirs are thick at the base than at the top.

Explain (1**mark**)

……

……

……

……

8.Figure 3.0 shows a brick of mass 8.0kg standing upright on the ground as shown.

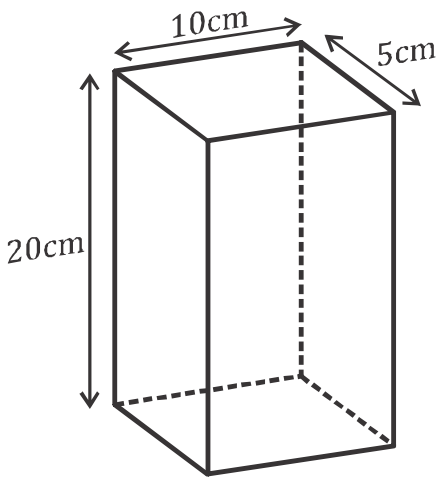

What is the pressure it exerts on the ground ? ($g = 10Nkg^{-1}$) **(3 marks)**

Prefer Calling Amobi Group of Examiners @ 0743 333 000 or 0706 851 439 for Marking Schemes

9. The Figure below shoes three toiy animals hanging from a rod . The rod hangs from the ceiling by a string tied at the centre of the rod. The system is in equilibrium

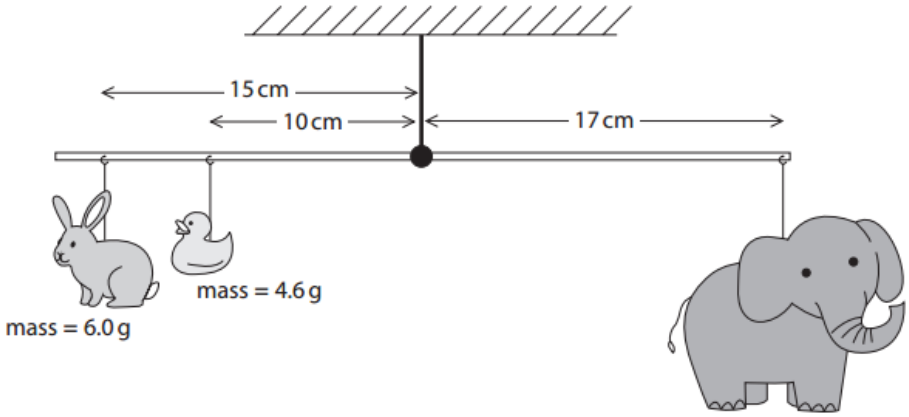

Figure 12

Using principle of moments calaculate the weight of oy elephant **(3mks)**

10. Figure below shows a loop of cotton thread tied onto a wire frame. The figure is dipped into a soap solution and withdrawn.

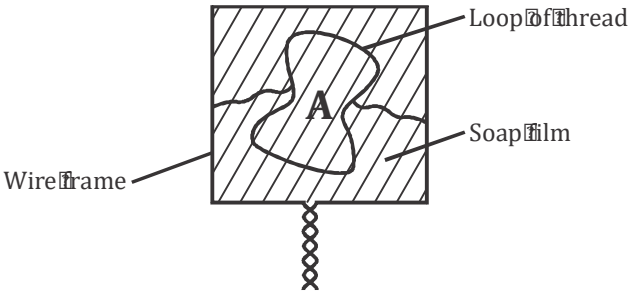

Prefer Calling Amobi Group of Examiners @ 0743 333 000 or 0706 851 439 for Marking Schemes

Illustrate the shape of the loop of thread when part A is broken by touching it with a hot needle. **(1 marks)**

11. The diagram in fig 5.0 shows a section of a pipe with different cross-sectional area.

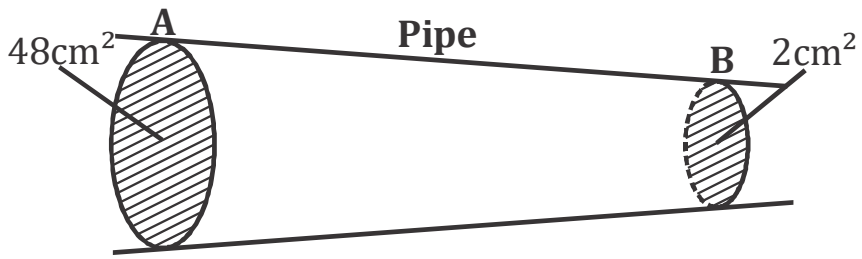

If water flows with a velocity of 10m/s in section A, what would be the velocity of water in section B ? **(2marks)**

……

……

……

……

12. The figure below shows a U – tube containing two liquids L_1 and L_2 of densities $0.5g/cm^3$ and $0.8g/cm^3$ respectively floating on a water surface. If the system is in equilibrium, determine the ratio $h_1 : h_2$ **(3mks)**

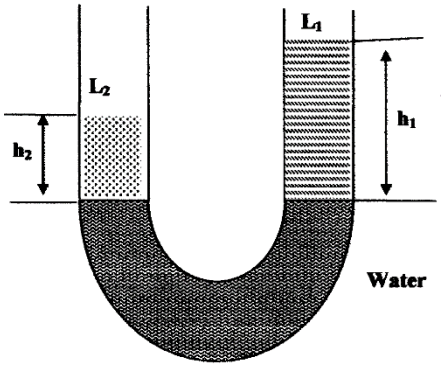

Prefer Calling Amobi Group of Examiners @ 0743 333 000 or 0706 851 439 for Marking Schemes

SECTION B(55 marks)

13. (a) Define the term mechanical advantage of a machine. **(1mk)**

……

……

……

(b) Figure 11 shows a pulley system being used to raise a load.

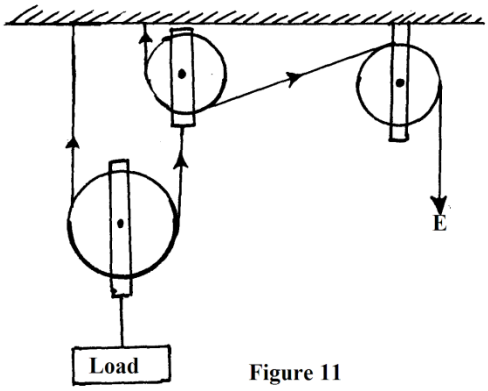

Figure 11

This pulley system has an efficiency of 75%.

(i) Determine the velocity ratio of the system. **(1mk)**

(ii) Calculate the mechanical advantage of the pulley system. **(2mks)**

(iii) What effort is required to raise a load of 240kg? **(2mks)**

Prefer Calling Amobi Group of Examiners @ 0743 333 000 or 0706 851 439 for Marking Schemes

(iv) Calculate the work done by a person using this machine in raising a load of 120kg through a vertical distance of 2.5m **(3mks)**

(c) Give two reasons to explain why the efficiency of a machine cannot be 100%. **(2mks)**

……

……

……

……

14. a) A boy throws a tennis ball vertically upwards from a truck moving at a constant velocity. Give the reason why the ball lands back exactly the same point where it was projected. **(1 mark)**

……

……

……

b) Define impulse in terms of momentum. **(1 mark)**

……

……

……

c) A trailer of mass 30 tonnes travelling at a velocity of 72km/h rams onto a stationary bus of mass 10 tonnes. The impact takes 0.5 seconds before the two vehicles move off together at a constant velocity for 15 seconds. Determine:

i) the common velocity **(3 marks)**

Prefer Calling Amobi Group of Examiners @ 0743 333 000 or 0706 851 439 for Marking Schemes

ii) The distance moved after the impact **(2 marks)**

iii) the impulsive force on the trailer on impact **(3 marks)**

d) Give reasons why a safety seat belt used in a vehicle:

i) Should have a wide surface area **(1 mark)**

……

……

……

ii) Should be slightly extensible **(1 mark)**

……

……

……

13. (a) A motor car tyre is inflated so that the pressure is 2×10^5 Nm^{-2} at a temperature of 17^oC. During a journey the tyre heats up to 47^oC, what will be the new pressure? (Assume that the tyre does not expand)

(3mks)

Prefer Calling Amobi Group of Examiners @ 0743 333 000 or 0706 851 439 for Marking Schemes

(b) Table 1 shows the results from Boyles Law experiment

Pressure (atmosphere)	1	1.3	1.5	1.8	2.3	2.6	3.2	3.7
Length of air column, L (mm)	41	30	27.5	22	18	16	12.5	11.0
$^1/_L$ x 10^{-2} (mm^{-1})								

(i) Complete the table by filling in the values of the last two rows **(2mks)**

(ii) Plot a graph of pressure against $^1/_L$ on the grid provided **(4mks)**

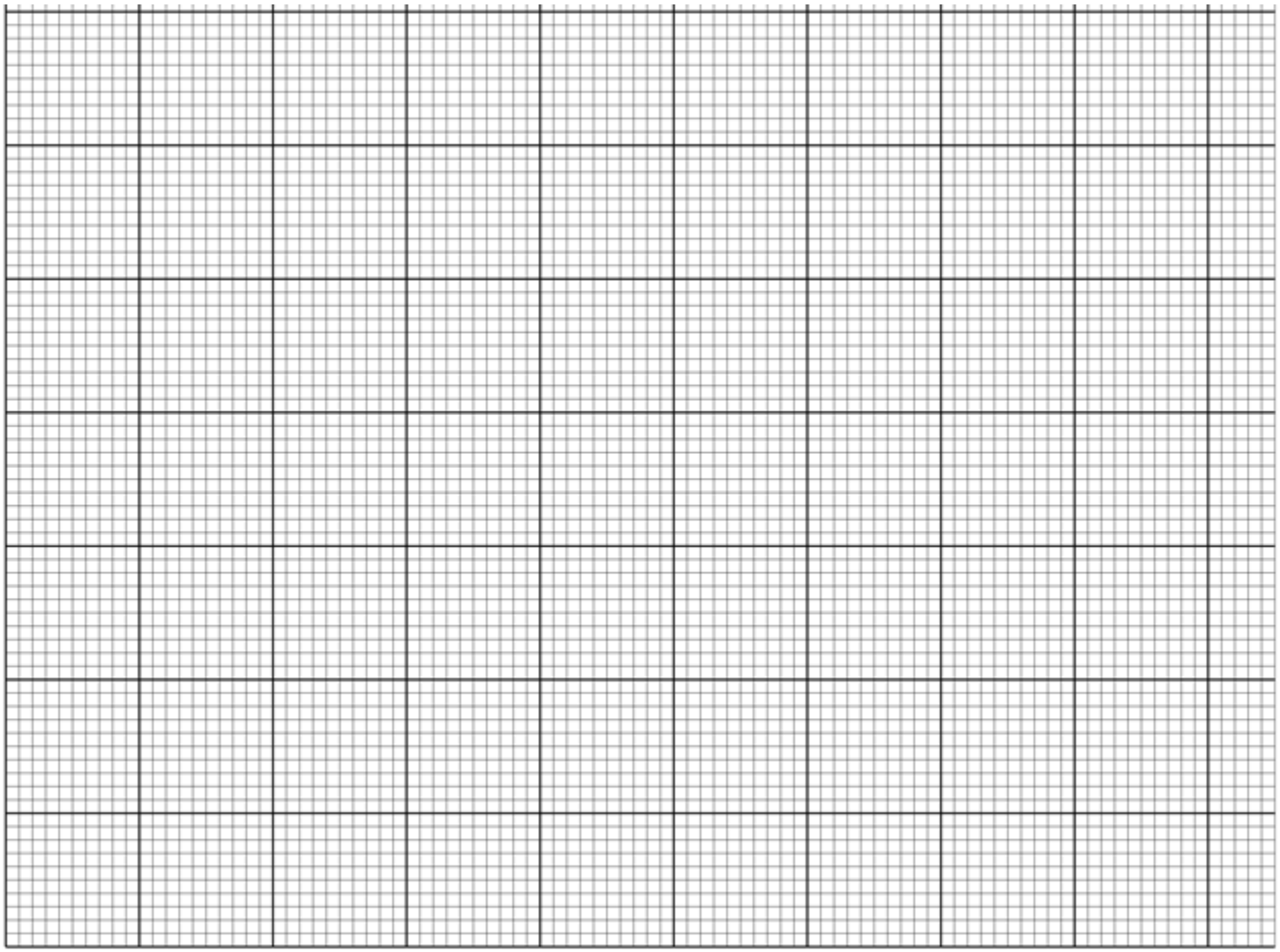

Prefer Calling Amobi Group of Examiners @ 0743 333 000 or 0706 851 439 for Marking Schemes

(iii) Estimate the pressure of the air column when the length of the air is zero **(2mks)**

14. The Figure below shows a graph of velocity against time for a moving body

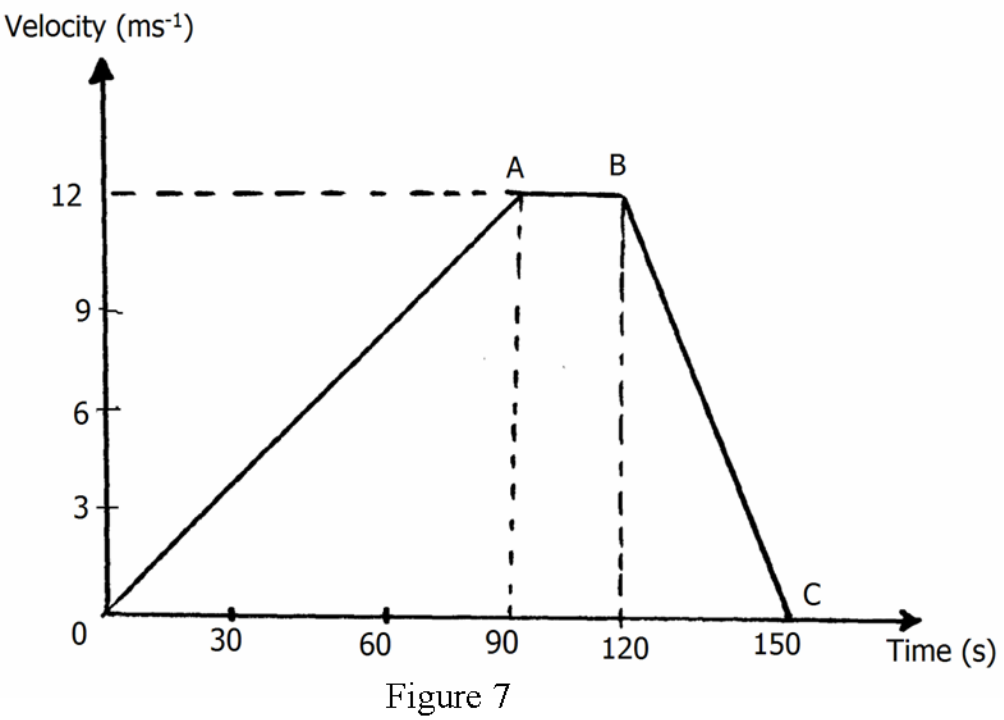

Figure 7

(a) (i) Describe the motion between O and A **(2mks)**

……

……

……

……

(ii) Determine the acceleration between A and B **(2mks)**

Prefer Calling Amobi Group of Examiners @ 0743 333 000 or 0706 851 439 for Marking Schemes

(b) A body moving initially at $50ms^{-1}$ decelerates uniformly at $2ms^{-2}$ until it comes to rest .
What distance does it cover from the time it started to decelerate **(3mks)**

(c) The initial velocity of a body of mass 50kg is $10ms^{-1}$. A constant resultant force of 15N is then applied. How long will it take before the kinetic energy doubles **(3mks)**

15. a) Explain why it is advisable to use a pressure cooker at high altitude. **(2marks)**

b) Water of mass 3.0kg initially at 20^0C is heated in an electric kettle rated 3.0kW. The water is heated until it boils at 100^oC (take specific heat capacity of water = $4200Jkg^{-1}k^{-1}$, heat capacity of the kettle = $450Jkg^{-1}$ and specific latent heat of vaporization of water = $2.3MJkg^{-1}j$.

Determine:

(i)The heat absorbed by the water. **(2 marks)**

Prefer Calling Amobi Group of Examiners @ 0743 333 000 or 0706 851 439 for Marking Schemes

(ii)The heat absorbed by the electric kettle. **(2 marks)**

(iii)The time taken for the water to boil. **(2marks)**

(iv)How much longer it will take to boil all the water. **(3marks)**

Prefer Calling Amobi Group of Examiners @ 0743 333 000 or 0706 851 439 for Marking Schemes

BRILLIANT STUDENTS

FORM 3 END TERM 3 SERIES 3 EXAMS

NAME: ……

SCHOOL: ……

ADM NO: …… **SIGN:** …… **DATE:** ……

231/ 2 - Physics -Paper 2 (Theory)

END OF TERM 3

Time: 2 Hours

INSTRUCTIONS TO CANDIDATES

(i) *Write your* ***name, admission number*** *and* ***class*** *in the spaces provided above.*

(ii) Sign and write the date *of examination in the spaces provided above.*

(iii)*This paper consists of* ***TWO*** *sections:* ***A*** *and* ***B****.*

(iv) *Answer* ***ALL*** *the questions in sections* ***A*** *and* ***B*** *in the spaces provided.*

(v) ALL *working* ***MUST*** *be clearly shown.*

(vi) *Non-programmable silent electronic calculators and KNEC mathematical tables may be used.*

(vii) Candidates should check the question paper to ascertain that all the pages are printed as indicated and that no questions are missing*.*

FOR EXAMINER'S USE ONLY:

Section	Question	Maximum Score	Candidate's Score
A	1 – 13	25	
	14	07	
	15	12	
B	16	12	
	17	13	
	18	11	
Total Score		80	

Prefer Calling Amobi Group of Examiners @ 0743 333 000 or 0706 851 439 for Marking Schemes

SECTION A (25 MARKS)

Attempt ALL the questions in this section.

1.The figure **below** shows an object O placed in front of a plane mirror.

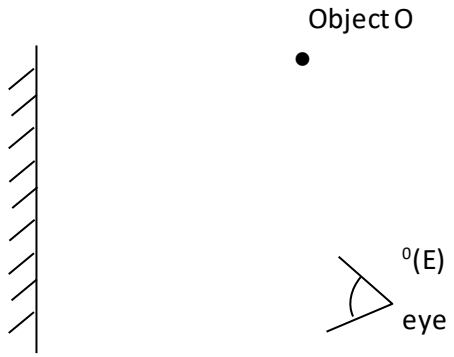

On the same diagram, draw rays to locate the position of the image I as seen from the eye E. **(2marks)**

2.A circuit consists of a battery, metal wire, ammeter and a switch connected in series. The switch is closed and the ammeter reading noted. The metal wire is now heated.

a) State the observations made on the ammeter reading. **(1mark)**

……

……

……

b) Give one reason for the above observation made **(1mark)**

……

……

……

Prefer Calling Amobi Group of Examiners @ 0743 333 000 or 0706 851 439 for Marking Schemes

3.Figure 2 shows an incident ray normal to the surface BC of a right-angled glass prism ABC. The critical angle of the glass is 42^0

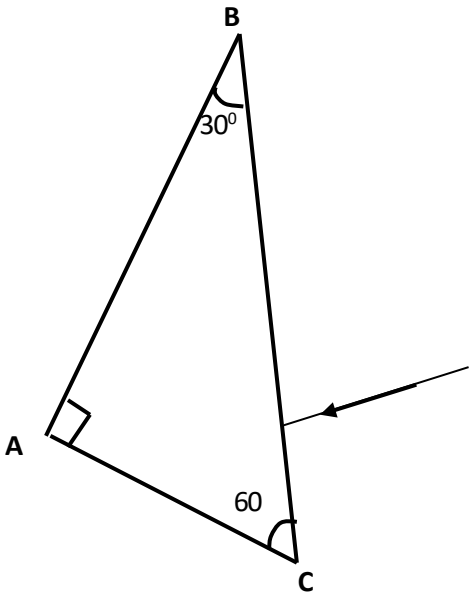

Complete the diagram to show the path of the ray. **(2marks)**

4.The image formed by a convex mirror is virtual. State two other characteristics of image formed by the convex mirror. **(2 Marks)**

……

……

……

……

5. (a)State the basic law of magnetism. **(1 mark)**

……

……

……

……

(b) The figure **below** shows how magnets are stored in pairs with keepers at the ends.

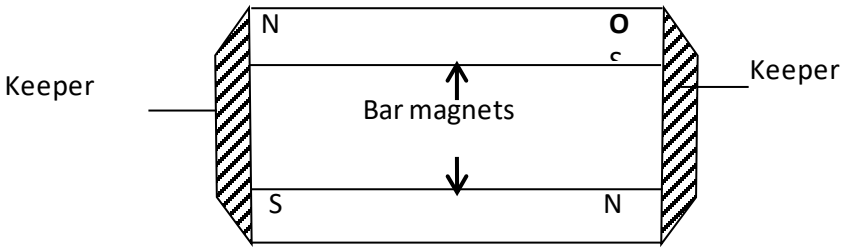

Prefer Calling Amobi Group of Examiners @ 0743 333 000 or 0706 851 439 for Marking Schemes

Explain how this method of storing helps in retaining magnetism longer. **(2 marks)**

……

……

……

……

……

……

6. The figure below shows a hack-saw blade clamped horizontally on a bench and the free end is made to vibrate about the rest position.

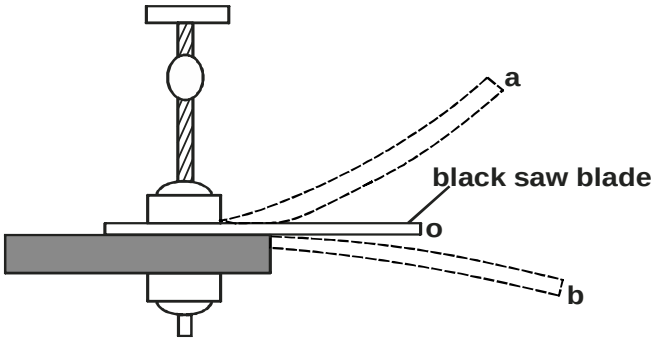

The movement $o \rightarrow a \rightarrow o \rightarrow b \rightarrow o \rightarrow a \rightarrow o \rightarrow b$ takes 0.7seconds
Determine the frequency of vibration of the blade. **(3 marks)**

7. A current carrying conductor AB is in a magnetic field as shown in figure 1 below.

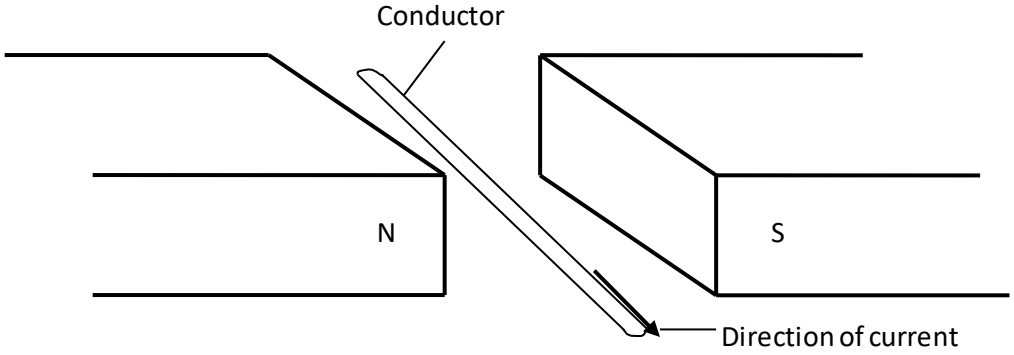

Fig 1

Prefer Calling Amobi Group of Examiners @ 0743 333 000 or 0706 851 439 for Marking Schemes

a) Indicate the direction of the force F acting on the conductor. **(1mark)**

b) State the factors that determine the direction of the force F. **(2marks)**

……

……

……

……

……

8. (a) Distinguish between a transverse and a longitudinal wave. **(1 mark)**

……

……

……

……

(b) Determine the frequency of the wave shown below. **(2 marks)**

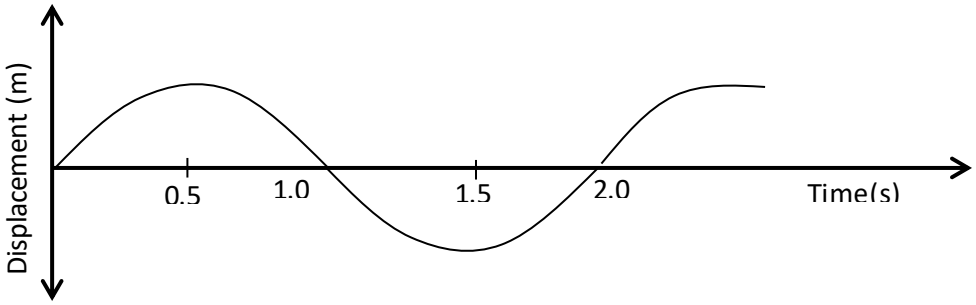

Prefer Calling Amobi Group of Examiners @ 0743 333 000 or 0706 851 439 for Marking Schemes

9. (a) What is meant by the term "topping" as applied to a lead acid accumulator ? **(1 mark)**

……

……

……

……

b) State two advantage of a lead acid accumulator over nickel-iron accumulator. **(2 mark)**

……

……

……

……

10. The figure below shows a sharp pin fixed on a cap of the electroscope. The electroscope is highly charged and then left for some time.

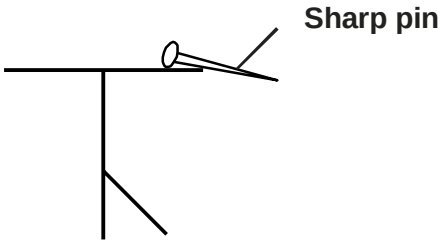

Explain why the leaf collapses. **(2 marks)**

……

……

……

……

11. The figure below shows a positive charge near a plate carrying negative charge.

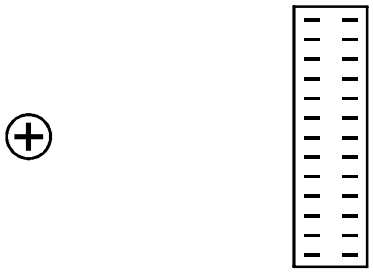

Draw an electric field pattern between them **(1 mark)**

Prefer Calling Amobi Group of Examiners @ 0743 333 000 or 0706 851 439 for Marking Schemes

SECTION B (55 MARKS)

Attempt ALL the questions in this section.

12. (a)Define the refractive index of a substance . **(1 mark)**

b) In an experiment to determine the refractive index in a liquid, the liquid was poured into a measuring cylinder. A pin was placed at the bottom of the cylinder and another pin was used to locate the apparent position of the first pin. The real and apparent depth were measured. The experiment was repeated with other values of real depth. The table below shows the results obtained.

Real depth (cm)	5	10	15	20	25
Apparent depth (cm)	3.3	6.7	10	13.3	16.7

i) Plot the graph of real depth against apparent depth. **(5 marks)**

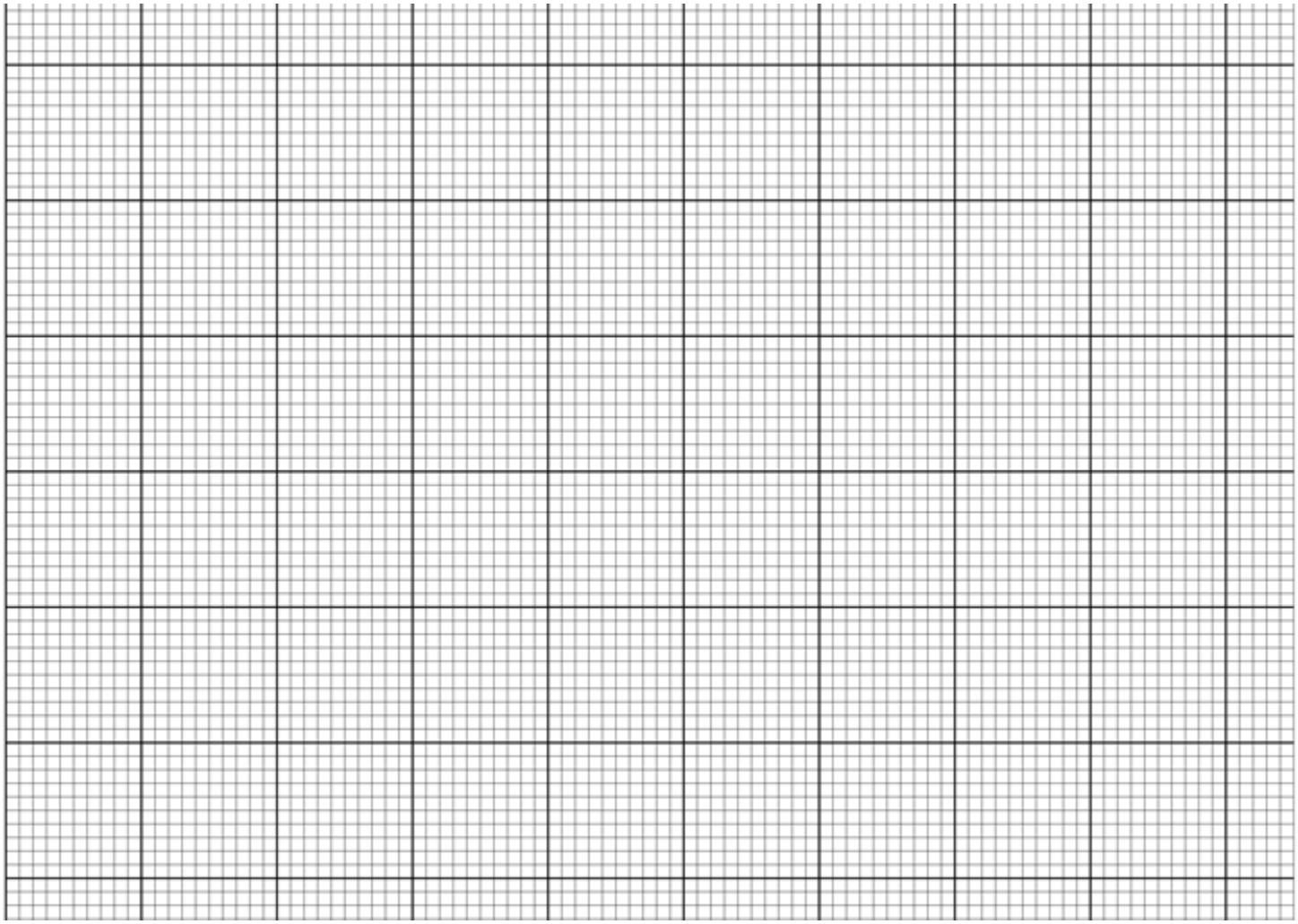

Prefer Calling Amobi Group of Examiners @ 0743 333 000 or 0706 851 439 for Marking Schemes

ii) From the graph determine the refractive index of the liquid. **(3 marks)**

c) The figure 5 shows a ray of light incident on a glass-air interface.

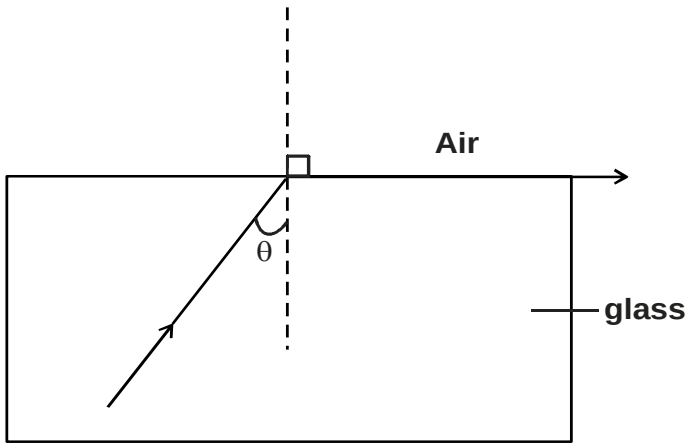

Given that the refractive index of the glass is 1.6, determine angle θ. **(3 marks)**

13. (a) State Ohm's law. **(2 mark)**

Prefer Calling Amobi Group of Examiners @ 0743 333 000 or 0706 851 439 for Marking Schemes

b) Study the circuit diagram (Fig 6) below and answer the questions that follow.

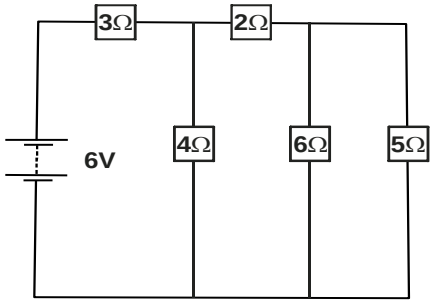

i) Calculate the effective resistance of the circuit. **(4marks)**

ii) Find the total current in the circuit. **(3 marks)**

Prefer Calling Amobi Group of Examiners @ 0743 333 000 or 0706 851 439 for Marking Schemes

c) The figure 7 below shows a low voltage lighting circuit.

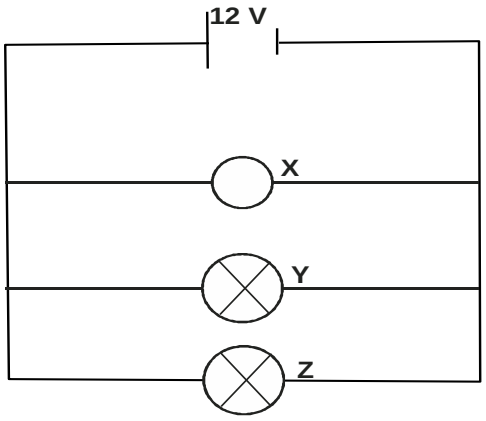

Fig 7

i) On the figure indicate with letter S a point in the circuit where a switch could be placed that would turn off lamp Y and Z at the same time but would leave lamps X still lit. **(1 mark)**

ii) The current in lamp Z is 3.0A, calculate the resistance of this lamp. **(3 marks)**

14. In figure 15 shown below. Two identical electroscopes A and B carry the same type of charges as shown. The two are then connected with a copper wire.

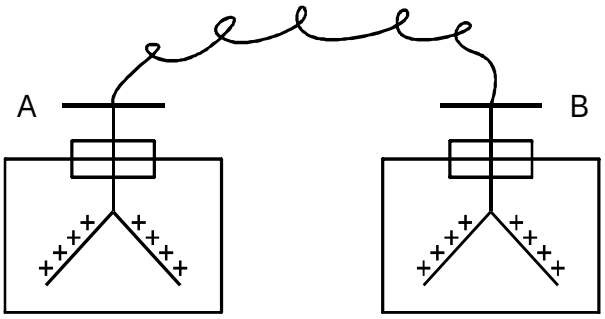

Fig 15

Prefer Calling Amobi Group of Examiners @ 0743 333 000 or 0706 851 439 for Marking Schemes

State and explain the observations made. **(2 marks)**

……

……

……

……

b) When a charged body P is brought close to the cap of a negatively charged electroscope the leaf of the electroscopes rises. State with reason the charge on the body P. **(2 marks)**

……

……

……

……

c) Four capacitors were connected in a circuit as shown in figure 16 below. Determine the charge stored in the combination of the capacitors when the switch is closed. **(4 marks)**

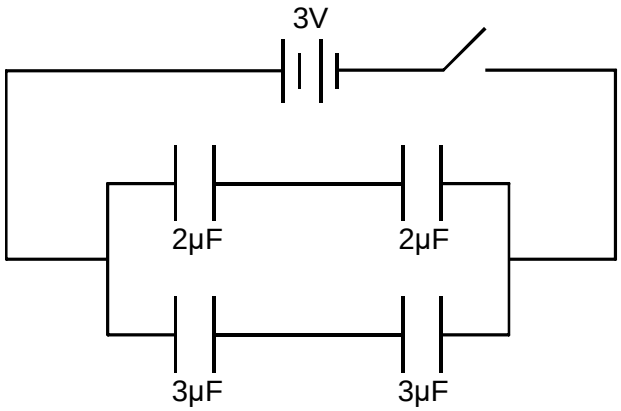

Fig 16

Prefer Calling Amobi Group of Examiners @ 0743 333 000 or 0706 851 439 for Marking Schemes

d) State two ways in the capacitance of a parallel plate capacitor can be increased. **(2 marks)**

……

……

……

……

1. (a) A person standing behind a wall hears a bell ringing although he cannot see the bell. What property of sound enables him to hear the sound? **(1 mark)**

……

……

……

b) The figure below is a sketch of ripples caused by a vibrator in a ripple tank whose frequency is 50Hz.

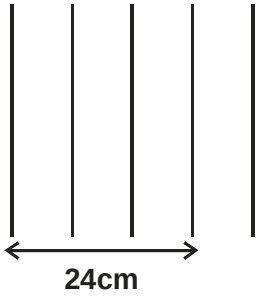

Using the above information, determine the speed of the wave motion. **(3 marks)**

c)The speed of sound in air determined on a warm day is 330m/s. Explain any difference you would expect in the results if the measurement is done on a cold day. **(2 marks)**

……

……

……

……

……

……

Prefer Calling Amobi Group of Examiners @ 0743 333 000 or 0706 851 439 for Marking Schemes

d) In an experiment to determine the speed of sound, an observer stood in front of a high wall at a distance of 80m. He clapped two boards together at such a rate that each clap coincided with the echo from the wall. A second observer noted a time of 9.5 seconds starting with first clap and ending with the 21st clap.

i) Calculate the speed of sound under these conditions. **(4 marks)**

ii) Describe two probable source of error in this experiment. **(2mark)**

……

……

……

……

iii) State two way in which sound wave differ from light waves. **(2 mark)**

……

……

……

……

Prefer Calling Amobi Group of Examiners @ 0743 333 000 or 0706 851 439 for Marking Schemes

BRILLIANT STUDENTS

FORM 3 END TERM 3 SERIES 3 EXAMS

NAME: ……..

SCHOOL: ……...

ADM NO: …… **SIGN:** …… **DATE:** ……...

232/3

PHYSICS PAPER 3 (PRACTICAL)

TIME: 2 $^1/_2$HOURS

FORM 3 END OF TERM 3 EXAMINATION

INSTRUCTIONS TO CANDIDATES

- Write **your name** and **admission number** in the spaces provided
- Answer **ALL** the questions in the spaces provided in the question paper.
- You are supposed to spend the first 15 minutes of the 2 $^1/_2$ hours allowed for this paper reading the whole paper carefully before commencing your work.
- Marks are given for clear record of observations made, their suitability, accuracy and the use made of them.
- Candidates are advised to record their observations as soon as they are made.
- **Non-programmable** silent electronic calculators and KNEC mathematical table may be used.
- This paper consists of ***5 printed pages***. Candidates should check to ensure that all pages are printed as indicated and no questions are missing

FOR EXAMINER'S USE ONLY

QUESTION	MAXIMUM SCORE	CANDIDATES SCORE
1	20	
2	20	
TOTAL	40	

Prefer Calling Amobi Group of Examiners @ 0743 333 000 or 0706 851 439 for Marking Schemes

1.You are provided with the following apparatus:-

a) A rectangular glass slab.

b) A soft board.

c) White sheets of paper.

d) 4 optical pins.

e) Four tamp pin

NB: You should have mathematical tables / calculator, geometrical set and a transparent ruler.

Proceed as follows:

(i) Fix a white sheet of paper on the soft board using tamp pins.

(ii) Place the glass slab on the white piece of paper. Trace the outline of the glass slap on the paper.

(iii) Stick two pins P_1 and P_2 so that the line joining them falls on the edge of the glass obliquely, forming an angle of 15^0 with normal NA.

(iv) Stick two other pins P_3 and P_4 so that they appear to be in line with the images of object pins P_1 and P_2 in the slab as shown on the diagram below.

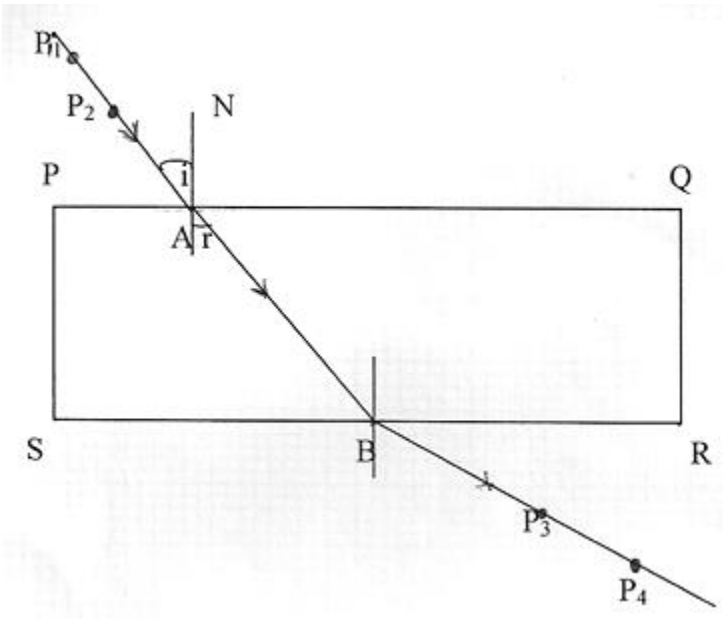

(v) Now remove the slab. Draw the lines joining P_1 and P_2 and P_3 and P_4. Extend the two lines to meet the outline of the block at the points A and B respectively. The lines P_1 and P_2, AB and P_3 and P_4 show the path the ray follows as it passes from one medium to another: air to glass and back to air again. Mark the direction with arrows.

Prefer Calling Amobi Group of Examiners @ 0743 333 000 or 0706 851 439 for Marking Schemes

(vi) Measure the angle of refraction (r) between AB and the normal. Record it in the table below. Repeat the procedure for angles of incidence of 30^0, 45^0, 60^0 and 75^0 and record the values in the table below. **(7mks)**

Angle of incidence (i^0)	15^0	30^0	45^0	60^0	75^0
Angle of refraction (r^0)					
Sin i^0					
Sin r^0					

(vii) Draw a graph of sin i^0 (Y-axis) against sin r^0 (X-axis) in the grid provided below. **(5mks)**



Prefer Calling Amobi Group of Examiners @ 0743 333 000 or 0706 851 439 for Marking Schemes

(viii) Determine the gradient of the graph and write down the equation of the graph. **(3mks)**

(ix) Compare the value of refractive index, ŋ, if ŋ = sin i / sin r using a point on the graph. **(3mks)**

(x) NB: Remember to hand in the pieces of white sheet of paper you used. **(2mks)**

4. You are provided with the following apparatus

– Two dry cells

– An ammeter

– A voltmeter

– A cell holder

– Five connecting wires

– A jockey

– A nichrome wire mounted on a mm scale labeled PQ

PROCEDURE

a) Set up the apparatus as shown below

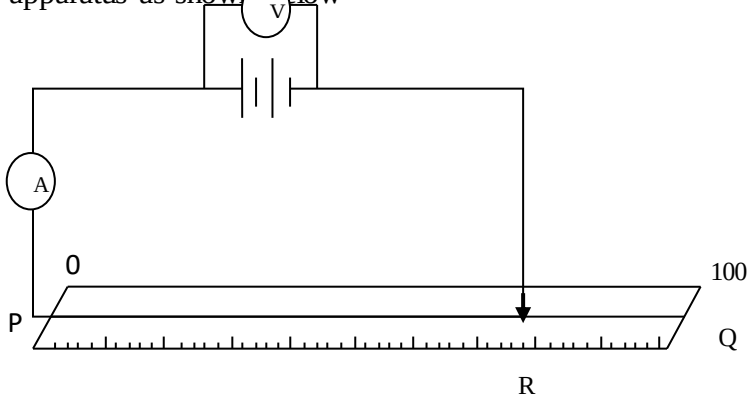

Prefer Calling Amobi Group of Examiners @ 0743 333 000 or 0706 851 439 for Marking Schemes

Disconnect the jockey from the wire at point R and record the voltmeter reading V and the corresponding ammeter reading. **(2marks)**

V =.....

I =.....

b) Now connect the jockey at the 70cm mark and record the voltmeter reading V and the corresponding ammeter reading in the table below. Repeat for values of V and J at the 50cm, 40cm, 30cm,20cm and10cm mark **(6 marks)**

Length cm	70	50	40	30	20	10
p.d (v)						
Current I(A)						

c) Plot a graph of p.d (v) against current I **(5marks)**



Prefer Calling Amobi Group of Examiners @ 0743 333 000 or 0706 851 439 for Marking Schemes

d) From the graph determine

a. The e.m.f of one cell **(2marks)**

b. The internal resistance of one cell, given that $E = V + Ir$ **(3marks)**

c. The voltage p.d when current I=0.05A **(1mark)**

d. The current I when the p.d voltage is 1.0V **(1mark)**

Prefer Calling Amobi Group of Examiners @ 0743 333 000 or 0706 851 439 for Marking Schemes

CALL AMOBI GROUP OF EXAMINERS @ 0743 333 000 OR 0706 851 439 TO ACQUIRE :











