Ethiopian Building Code Standard – Based on European Norme

Actions on structures - General actions - Part 1-4:

Wind actions

ONLY FOR REVIEW PURPOSE

© 2014 All rights reserved.
Ministry of Urban Development, Housing and Construction.

Ethiopian Building Code Standard Revision Committee on "BASIS OF DESIGN AND ACTIONS ON STRUCTURES"

Steering Committee Chair

Hailemeskel Tefera

Project Coordinator

Esayas Gebreyouhannes

Technical Committee Members

Bedilu Habte	**Chairman**
Wondimu Kassa	**Secretary**
Adil Zekaria	
Esayas Gebreyouhannes	
Fekadu Melese	

Editorial work assisted by:

Yisshak Taddesse

ONLY FOR REVIEW PURPOSE

NATIONAL FOREWORD

The Proclamation to define the powers and duties of The Executive organs of The Federal Democratic Republic of Ethiopia Proclamation No 691/ 2010 and Ethiopian Building Proclamation No 624/2009 empowers the Ministry of Urban Development, Housing and Construction to prepare the Country's Building Code, issue Standards for design and construction works, and follow up and supervise the implementation of same.

This Ethiopian Standard is the official English language version of "BASIS OF STRUCTURAL DESIGN - **EBCS EN 1991-1-4:2014**". It supersedes part of "BASIS OF DESIGN AND ACTIONS ON STRUCTURES - EBCS-1 1995" which is withdrawn. With an eye on the latest technological advancements and trends worldwide and with the aim of bringing the Ethiopian Construction Standard at par with the present state-of-the-art, this edition has brought a major shift in terms of contents and comprehensiveness. Ethiopia is a signatory member of CEN/CENELEC to adopt European Standards in a similar fashion as the Members and Affiliates of CEN/CENELEC in which Ethiopia is bound to comply with the CEN/CENELEC Internal Regulations which stipulate the conditions for giving the basic framework of European Standard the status of a national standard without any alteration. The major benefits to be gained in applying these standards are the harmonization of professional practice and the ensuring of appropriate level of workmanship, level of safety and quality of construction work.

EBCS EN 1991-1-4:2014 is prepared based on EN 1991-1-4 by a Technical Committee "BASIS OF DESIGN AND ACTIONS ON STRUCTURES" the secretariat of which is held by Addis Ababa University. The document is intended to be used in conjunction with EBCS EN 1991:2014 to EBCS EN 1998:2014 for the structural design of buildings and civil engineering works, including geotechnical aspects, structural fire design, situations involving earthquakes, execution and temporary structures. The normative part of this Ethiopian Building Code Standard is chosen based on the local needs and construction practice. The range and possible choice are given in the normative text, and a Note will qualify it as a Nationally Determined Parameter (NDP) specific for the Ethiopian Construction industry. The NDPs can be a specific value for a factor, a specific level or class, a particular method or a particular application rule. In the current version of the Ethiopian Building Codes, the NDPs are mostly taken from the recommendations provided by the European Standards. To particularly determine the appropriate values, levels, methods and application conforming to our local conditions extensive and continuous research shall be conducted. In line with such rigorous approach, the NDPs will be published in a National Annex which will be incorporated by amendment into this Ethiopian Standard in due course, after public consultation has taken place for a grace period of one year. As this standard is technical document which, by their very nature, require periodic updating, revised edition will be issued by the Ministry from time to time as appropriate.

This document does not purport to include all the necessary provisions of a contract. Users are responsible for their correct application.

Compliance with this Ethiopian Building Code Standard does not of itself confer immunity from legal obligations.

ONLY FOR REVIEW PURPOSE

The Ministry of Urban Development Housing and Construction as mandated acknowledges this document as a national resource tool and reference document which comprises a front cover, an inside front cover, a title page, National foreword, Table of Contents, pages 1 to 141 and a back cover. This Ethiopian Construction Standard, having been prepared under the direction of the Ethiopian Building Proclamation No 624/2009, was published under the authority of the Ministry of Urban Development, Housing and Construction on 01 December 2014.

Ministry of Urban development, Housing and Construction

FDRE

ONLY FOR REVIEW PURPOSE

ONLY FOR REVIEW PURPOSE

CONTENTS PAGE

Introduction

.....i

SECTION 1 General 1

1.1 Scope 1
1.2 Normative references 2
1.3 Assumptions 2
1.4 Distinction between Principles and Application Rules 2
1.5 Design assisted by testing and measurements 2
1.6 Definitions 2
1.6.1 fundamental basic wind velocity 3
1.6.2 basic wind velocity 3
1.6.3 mean wind velocity 3
1.6.4 pressure coefficient 3
1.6.5 force coefficient 3
1.6.6 Background response factor 3
1.6.7 Resonance response factor 3
1.7 Symbols 3

SECTION 2 Design situations 7

SECTION 3 Modelling of wind actions 8

3.1 Nature 8
3.2 Representations of wind actions 8
3.3 Classification of wind actions 8
3.4 Characteristic values 8
3.5 Models 8

SECTION 4 Wind velocity and velocity pressure 9

4.1 Basis for calculation 9
4.2 Basic values 9
4.3 Mean wind 10
4.3.1 Variation with height 10
4.3.2 Terrain roughness 10
4.3.3 Terrain orography 12
4.3.4 Large and considerably higher neighbouring structures 13
4.3.5 Closely spaced buildings and obstacles 13
4.4 Wind turbulence 13
4.5 Peak velocity pressure 13

SECTION 5 Wind actions 15

5.1 General 15

ONLY FOR REVIEW PURPOSE

5.2 Wind pressure on surfaces **16**
5.3 Wind forces **17**

SECTION 6 Structural factor $c_s c_d$ **19**

6.1 General **19**
6.2 Determination of $c_s c_d$ **19**
6.3 Detailed procedure **19**
6.3.1 Structural factor $c_s c_d$ 19
6.3.2 Serviceability assessments 21
6.3.3 Wake buffeting 21

SECTION 7 Pressure and force coefficients **22**

7.1 General **22**
7.1.1 Choice of aerodynamic coefficient 22
7.1.2 Asymmetric and counteracting pressures and forces 23
7.1.3 Effects of ice and snow 24
7.2 Pressure coefficients for buildings **24**
7.2.1 General 24
7.2.2 Vertical walls of rectangular plan buildings 25
7.2.3 Flat roofs 28
7.2.4 Monopitch roofs 31
7.2.5 Duopitch roofs 33
7.2.6 Hipped roofs 37
7.2.7 Multispan roofs 38
7.2.8 Vaulted roofs and domes 40
7.2.9 Internal pressure 42
7.2.10 Pressure on walls or roofs with more than one skin 44
7.3 Canopy roofs **45**
7.4 Free-standing walls, parapets, fences and signboards **52**
7.4.1 Free-standing walls and parapets 52
7.4.2 Shelter factors for walls and fences 54
7.4.3 Signboards 54
7.5 Friction coefficients **55**
7.6 Structural elements with rectangular sections **57**
7.7 Structural elements with sharp edged section **58**
7.8 Structural elements with regular polygonal section **59**
7.9 Circular cylinders **61**
7.9.1 External pressure coefficients 61
7.9.2 Force coefficients 63
7.9.3 Force coefficients for vertical cylinders in a row arrangement 65
7.10 Spheres **66**
7.11 Lattice structures and scaffoldings **67**
7.12 Flags **70**
7.13 Effective slenderness λ and end-effect factor ψ_λ **72**

SECTION 8 Wind actions on bridges **75**

8.1 General **75**

ONLY FOR REVIEW PURPOSE

8.2 Choice of the response calculation procedure **78**
8.3 Force coefficients **78**
8.3.1 Force coefficients in x-direction (general method) 78
8.3.2 Force in x-direction – Simplified Method 82
8.3.3 Wind forces on bridge decks in z-direction 82
8.3.4 Wind forces on bridge decks in y-direction 83
8.4 Bridge piers **84**
8.4.1 Wind directions and design situations 84
8.4.2 Wind effects on piers 84

Annex A (informative) Terrain effects **85**

A.2 Transition between roughness categories 0, I, II, III and IV **86**
A.3 Numerical calculation of orography coefficients **88**
A.4 Neighbouring structures **93**
A.5 Displacement height **94**

Annex B (informative) Procedure 1 for determining the structural factor $c_s c_d$ **95**

B.1 Wind turbulence **95**
B.2 Structural factor $c_s c_d$ **96**
B.3 Number of loads for dynamic response **98**
B.4 Service displacement and accelerations for serviceability assessments of a vertical structure **99**

Annex C (informative) Procedure 2 for determining the structural factor $c_s c_d$ **101**

C.1 Wind turbulence **101**
C.2 Structural factor **101**
C.3 Number of loads for dynamic response **103**
C.4 Service displacement and accelerations for serviceability assessments **103**

Annex D (informative) $c_s c_d$ values for different types of structures **105**

Annex E (informative) Vortex shedding and aeroelastic instabilities **108**

E.1 Vortex shedding **108**
E.1.1 General 108
E.1.2 Criteria for vortex shedding 108
E.1.3 Basic parameters for vortex shedding 108
E.1.4 Vortex shedding action 112
E.1.5 Calculation of the cross wind amplitude 112
E.1.6 Measures against vortex induced vibrations 123
E.2 Galloping **123**
E.2.1 General 123
E.2.2 Onset wind velocity 123
E.2.3 Classical galloping of coupled cylinders 125
E.3 Interference galloping of two or more free standing cylinders **128**
E.4 Divergence and Flutter **129**
E.4.1 General 129

ONLY FOR REVIEW PURPOSE

E.4.2 Criteria for plate-like structures 129
E.4.3 Divergency velocity 129

Annex F (informative) Dynamic characteristics of structures 131

F.1 General 131
F.2 Fundamental frequency 131
F.3 Fundamental mode shape 136
F.4 Equivalent mass 138
F.5Logarithmic decrement of damping 138

Bibliography 141

ONLY FOR REVIEW PURPOSE

Introduction

This Ethiopian Standard has been prepared by Technical Committee “Actions on Structures”, the Secretariat for which is held by Addis Ababa University.

This Ethiopian Standard supersedes EBCS-1,1995.

The Annexes A, B, C, D, E and F are informative.

The Structural programme comprises the following standards generally consisting of a number of Parts :

EBCS EN 1990	Ethiopian Building Code Standard 0:	Basis of Structural Design
EBCS EN 1991	Ethiopian Building Code Standard 1:	Actions on structures
EBCS EN 1992	Ethiopian Building Code Standard 2:	Design of concrete structures
EBCS EN 1993	Ethiopian Building Code Standard 3:	Design of steel structures
EBCS EN 1994	Ethiopian Building Code Standard 4:	Design of composite steel and concrete structures
EBCS EN 1995	Ethiopian Building Code Standard 5:	Design of timber structures
EBCS EN 1996	Ethiopian Building Code Standard 6:	Design of masonry structures
EBCS EN 1997	Ethiopian Building Code Standard 7:	Geotechnical design
EBCS EN 1998	Ethiopian Building Code Standard 8:	Design of structures for earthquake resistance

Status and field of application of Ethiopian codes

The Ministry of Urban Development, Housing and Construction recognise the Ethiopian Construction Codes serve as reference documents for the following purposes:

- as a means to prove compliance of building and civil engineering works with the essential requirements of Ethiopian Building Proclamation No 624/2009.
- as a basis for specifying contracts for construction works and related engineering services;
- as a framework for drawing up harmonised technical specifications for construction products

The Ethiopian Construction standards provide common structural design rules for everyday use for the design of whole structures and component products of both a traditional and an innovative nature. Unusual forms of construction or design conditions are not specifically covered and additional expert consideration will be required by the designer in such cases.

ONLY FOR REVIEW PURPOSE

This standard gives alternative procedures, values and recommendations for classes with notes indicating where National choice is made. EBCS EN 1991-1-4 has a National Annex containing Nationally Determined Parameters to be used for the design of buildings and civil engineering works to be constructed in Ethiopia.

The following are clauses where National choices from the context of the Ethiopian construction industry are made in EBCS EN 1991-1-4:

4.1 (1)
4.2 (1)P Note 2
4.2 (2)P Notes 1, 2, 3 and 5
4.3.1 (1) Notes 1 and 2
4.3.2 (1)
4.3.2 (2)
4.3.3 (1)
4.3.4 (1)
4.3.5 (1)
4.4 (1) Note 2
4.5 (1) Notes 1 and 2

5.3 (5)

6.1 (1)
6.3.1 (1) Note 3
6.3.2 (1)

7.1.2 (2)
7.1.3 (1)
7.2.1 (1) Note 2
7.2.2 (1)
7.2.2 (2) Note 1
7.2.8 (1)
7.2.9 (2)
7.2.10 (3) Notes 1 and 2
7.4.1 (1)
7.6 (1) Note 1
7.7 (1) Note 1
7.8 (1)
7.10 (1) Note 1
7.11 (1) Note 2
7.13 (1)
7.13 (2)

8.1 (1) Notes 1 and 2
8.1 (4)
8.1 (5)
8.2 (1) Note 1
8.3 (1)
8.3.1 (2)

ONLY FOR REVIEW PURPOSE

8.3.2 (1)
8.3.3 (1) Note 1
8.3.4 (1)
8.4.2 (1)

A.2 (1)

E.1.3.3 (1)
E.1.5.1 (1) Notes 1 and 2
E.1.5.1 (3)
E.1.5.2.6 (1) Note 1
E.1.5.3 (2) Note 1
E.1.5.3 (4)
E.1.5.3 (6)
E.3 (2)

ONLY FOR REVIEW PURPOSE

SECTION 1 GENERAL

1.1 Scope

(1) EBCS EN 1991-1-4 gives guidance on the determination of natural wind actions for the structural design of building and civil engineering works for each of the loaded areas under consideration. This includes the whole structure or parts of the structure or elements attached to the structure, e.g. components, cladding units and their fixings, safety and noise barriers.

(2) This Part is applicable to:

– Buildings and civil engineering works with heights up to 200 m. See also (11).

– Bridges having no span greater than 200 m, provided that they satisfy the criteria for dynamic response, see (12) and 8.2.

(3) This part is intended to predict characteristic wind actions on land-based structures, their components and appendages.

(4) Certain aspects necessary to determine wind actions on a structure are dependent on the location and on the availability and quality of meteorological data, the type of terrain, etc. These need to be provided in the National Annex and Annex A, through National choice by notes in the text as indicated. Default values and methods are given in the main text, where the National Annex does not provide information.

(5) Annex A gives illustrations of the terrain categories and provides rules for the effects of orography including displacement height, roughness change, influence of landscape and influence of neighbouring structures.

(6) Annex B and C give alternative procedures for calculating the structural factor $c_s c_d$.

(7) Annex D gives $c_s c_d$ factors for different types of structures.

(8) Annex E gives rules for vortex induced response and some guidance on other aeroelastic effects.

(9) Annex F gives dynamic characteristics of structures with linear behaviour

(10) This part does not give guidance on local thermal effects on the characteristic wind, e.g. strong arctic thermal surface inversion or funneling or tornadoes.

(11) Guyed masts and lattice towers are treated in EBCS EN 1993-7-1 and lighting columns in EN 40

(12) This part does not give guidance on the following aspects:

– torsional vibrations, e.g. tall buildings with a central core

– bridge deck vibrations from transverse wind turbulence

ONLY FOR REVIEW PURPOSE

– cable supported bridges

– vibrations where more than the fundamental mode needs to be considered

Note: The National Annex may provide guidance on these aspects as non contradictory complementary information.

1.2 Normative references

The following normative documents contain provisions which, through references in this text, constitute provisions of this Ethiopian standard. For dated references, subsequent amendments to, or revisions of any of these publications do not apply. However, parties to agreements based on this Ethiopian standard are encouraged to investigate the possibility of applying the most recent editions of the normative documents indicated below. For undated references the latest edition of the normative document referred to applies.

EBCS EN 1990 Ethiopian code: Basis of structural design

EBCS EN 1991-1-3 Ethiopian code 1: Actions on structures: Part 1-3: Snow loads

EBCS EN 1991-1-6 Ethiopian code 1: Actions on structures: Part 1-6: Actions during execution

EBCS EN 1991-2 Ethiopian code 1: Actions on structures: Part 2: Traffic loads on bridges

1.3 Assumptions

(1)P The general assumptions given in EBCS EN 1990, 1.3 apply.

1.4 Distinction between Principles and Application Rules

(1)P The rules in EBCS EN 1990, 1.4 apply.

1.5 Design assisted by testing and measurements

(1) With the approval of the appropriate Authority, wind tunnel tests and proven and/or properly validated numerical methods may be used to obtain load and response information, using appropriate models of the structure and of the natural wind.

(2) With the approval of the appropriate Authority, load and response information and terrain parameters may be obtained by appropriate full scale data.

1.6 Definitions

For the purposes of this European Standard, the definitions given in ES ISO 2394, ES ISO 3898 and ES ISO 8930 and the following apply. Additionally for the purposes of this Standard a basic list of definitions is provided in EBCS EN 1990,1.5.

ONLY FOR REVIEW PURPOSE

1.6.1 **fundamental basic wind velocity**
the 10 minute mean wind velocity with an annual risk of being exceeded of 0.02, irrespective of wind direction, at a height of 10 m above flat open country terrain and accounting for altitude effects (if required)

1.6.2 **basic wind velocity**
the fundamental basic wind velocity modified to account for the direction of the wind being considered and the season (if required)

1.6.3 **mean wind velocity**
the basic wind velocity modified to account for the effect of terrain roughness and orography

1.6.4 **pressure coefficient**
external pressure coefficients give the effect of the wind on the external surfaces of buildings; internal pressure coefficients give the effect of the wind on the internal surfaces of buildings.

The external pressure coefficients are divided into overall coefficients and local coefficients. Local coefficients give the pressure coefficients for loaded areas of 1 m^2or less e.g. for the design of small elements and fixings; overall coefficients give the pressure coefficients for loaded areas larger than 10 m^2.

Net pressure coefficients give the resulting effect of the wind on a structure, structural element or component per unit area.

1.6.5 **force coefficient**
force coefficients give the overall effect of the wind on a structure, structural element or component as a whole, including friction, if not specifically excluded

1.6.6 **Background response factor**
the background factor allowing for the lack of full correlation of the pressure on the structure surface

1.6.7 **Resonance response factor**
the resonance response factor allowing for turbulence in resonance with the vibration mode

ONLY FOR REVIEW PURPOSE

1.7 Symbols

(1) For the purposes of this Ethiopian standard, the following symbols apply

Note: The notation used is based on ES ISO 3898:1999. In this Part the symbol dot in expressions indicates the multiplication sign. This notation has been employed to avoid confusion with functional expressions.

(2) A basic list of notations is provided in EBCS EN 1990, 1.6 and the additional notations below are specific to EBCS EN 1991-1-4.

Latin upper case letters Latin lower case letters

A	area
A_{fr}	area swept by the wind
A_{ref}	reference area

B^2	background response part
C	wind load factor for bridges
E	Young's modulus
F_{fr}	resultant friction force
F_j	vortex exciting force at point j of the structure
F_w	resultant wind force
H	height of a topographic feature
I_v	turbulence intensity
K	mode shape factor; shape parameter
K_{iv}	interference factor for vortex shedding
K_{rd}	reduction factor for parapets
K_w	correlation length factor
K_x	non dimensional coefficient
L	length of the span of a bridge deck; turbulent length scale
L_d	actual length of a downwind slope
L_e	effective length of an upwind slope
L_j	correlation length
L_u	actual length of an upwind slope
N	number of cycles caused by vortex shedding
N_g	number of loads for gust response
R^2	resonant response part
R_e	Reynolds number
R_h, R_b	aerodynamic admittance
S	wind action
S_c	Scruton number
S_L	non dimensional power spectral density function
St	strouhal number
W_s	weight of the structural parts contributing to the stiffness of a chimney
W_t	total weight of a chimney

Latin lower case letter

a_G	factor of galloping instability
a_{IG}	combined stability parameter for interference galloping
b	width of the structure
c_{alt}	altitude factor
c_d	dynamic factor
c_{dir}	directional factor
c_r	force coefficient
$c_{f,o}$	force coefficient of structures or structural elements without free-end flow
$c_{f,l}$	lift force coefficient
c_{fr}	friction coefficient
c_{lat}	aerodynamic exciting coefficient
c_M	moment coefficient
c_p	pressure coefficient
c_{prob}	probability factor
c_r	roughness factor
c_o	orography factor
c_s	size factor
c_{season}	seasonal factor
d	depth of the structure
e	eccentricity of a force or edge distance
f_L	non dimensional frequency
h	height of the structure
h_{dis}	displacement height
k	equivalent roughness
k_L	turbulence factor
k_p	peak factor
k_r	terrain factor
k_e	torsional stiffness

ONLY FOR REVIEW PURPOSE

l	lengh of a horizontal structure
m	mass per unit length
m_1	equivalent mass per unit length
n_i	natural frequency of the structure of the mode I
$n_{1,x}$	fundamental frequency of along wind vibration
$n_{1,y}$	fundamental frequency of cross-wind vibration
n_0	ovalling frequency
p	annual probability of exceedence
q_b	peak velocity pressure
r	radius
s	factor; coordinate
t	averaging time of the reference wind speed, plate thickness
v_{CG}	onset wind velocity for galloping
v_{CIG}	critical wind velocity of vortex shedding
v_{crit}	critical wind velocity of vortex shedding
v_{div}	divergence wind velocity
v_m	mean wind velocity
$v_{b,o}$	fundamental value of the basic wind velocity
v_b	basic wind velocity
w	wind pressure
x	horizontal distance of the site from the top of a crest
x-direction	horizontal direction, perpendicular to the span
y-direction	horizontal direction along the span
y_{max}	maximum cross-wind amplitude at critical wind speed
z	height above ground
z_{ave}	average height
z-direction	vertical direction
z_0	roughness length
$z_{e,zi}$	reference height for external wind action, internal pressure
z_g	distance from the ground to the considered component
z_{max}	maximum height
zmin	minimum height

Greek upper case letter

Φ	upwind slope
$\Phi 1,x$	fundamental alongwind modal shape
θ	torsional angle

Greek lower case letters

α_G	galloping instability parameter
α_{IG}	combined stability parameter of interference gallopint
δ	Logarithmic decrement of damping
δ_a	logarithmic decrement of aerodynamic damping
δ_d	logarithmic decrement of damping due to special devices
δ_s	logarithmic decrement of structural damping
ε	coefficient
ε_0	bandwidth factor
ε_1	frequency factor
η	variable
φ	Solidity ratio, blockage of canopy
λ	Slenderness ratio
μ	opening ratio, permeability of a skin
ν	Up-crossing frequency, Poisson ratio, kinematic viscosity
ρ	air density
σ_v	standard deviation of the turbulence
$\sigma_{a,x}$	standard deviation of alongwind acceleration

ONLY FOR REVIEW PURPOSE

Ψ_{mc}	reduction factor for multibay canopies
Ψ_r	reduction factor of force coefficient for square sections with rounded corners
Ψ_λ	reduction factor of force coefficient for structural elements with end-effects
$\Psi_{\lambda\alpha}$	end-effect factor for citcular cylinders
Ψ_s	shelter factor for walls and fences
Ψ_{sc}	reduction factor of force coefficient for scaffoldings effected by solid building face
ζ	Exponent of mode shape

Indices

crit	critical
e	external, exposure
fr	friction
i	internal, mode number
j	current number of inceremental area or point of a structure
m	mean
p	peak, parapet
ref	reference
v	wind velocity
x	alongwind direction
y	cross-wind direction
z	vertical direction

ONLY FOR REVIEW PURPOSE

SECTION 2 DESIGN SITUATIONS

(1)P The relevant wind actions shall be determined for each design situation identified in accordance with EBCS EN 1990, 3.2.

(2) In accordance with EBCS EN 1990, 3.2 (3)P other actions (such as snow, traffic or ice) which will modify the effects due to wind should be taken into account.

Note: See also EBCS EN 1991-1-3, EBCS EN 1991-2 and ES ISO 12494

(3) In accordance with EBCS EN 1990, 3.2 (3)P, the changes to the structure during stages of execution (such as different stages of the form of the structure, dynamic characteristics, etc.), which may modify the effects due to wind, should be taken into account.

Note: See also EBCS EN 1991-1-6

(4) Where in design windows and doors are assumed to be shut under storm conditions, the effect of these being open should be treated as an accidental design situation.

Note: See also EBCS EN 1990, 3.2 (2) (P)

(5) Fatigue due to the effects of wind actions should be considered for susceptible structures.

Note: The number of load cycles may be obtained from Annex B, C and E.

ONLY FOR REVIEW PURPOSE

SECTION 3 MODELLING OF WIND ACTIONS

3.1 Nature

(1) Wind actions fluctuate with time and act directly as pressures on the external surfaces of enclosed structures and, because of porosity of the external surface, also act indirectly on the internal surfaces. They may also act directly on the internal surface of open structures. Pressures act on areas of the surface resulting in forces normal to the surface of the structure or of individual cladding components. Additionally, when large areas of structures are swept by the wind, friction forces acting tangentially to the surface may be significant.

3.2 Representations of wind actions

(1) The wind action is represented by a simplified set of pressures or forces whose effects are equivalent to the extreme effects of the turbulent wind.

3.3 Classification of wind actions

(1) Unless otherwise specified, wind actions should be classified as variable fixed actions, see EBCS EN 1990, 4.1.1.

3.4 Characteristic values

(1) The wind actions calculated using EBCS EN 1991-1-4 are characteristic values (see EBCS EN 1990, 4.1.2). They are determined from the basic values of wind velocity or the velocity pressure. In accordance with EBCS EN 1990 4.1.2 (7)P the basic values are characteristic values having annual probabilities of exceedence of 0.02, which is equivalent to a mean return period of 50 years.

Note: All coefficients or models, to derive wind actions from basic values, are chosen so that the probability of the calculated wind actions does not exceed the probability of these basic values.

3.5 Models

(1) The effect of the wind on the structure (i.e. the response of the structure), depends on the size, shape and dynamic properties of the structure. This Part covers dynamic response due to along-wind turbulence in resonance with the along-wind vibrations of a fundamental flexural mode shape with constant sign.

The response of structures should be calculated according to Section 5 from the peak velocity pressure, q_p, at the reference height in the undisturbed wind field, the force and pressure coefficients and the structural factor $c_s c_d$ (see Section 6). q_p depends on the wind climate, the terrain roughness and orography, and the reference height. q_p is equal to the mean velocity pressure plus a contribution from short-term pressure fluctuations.

(2) Aeroelastic response should be considered for flexible structures such as cables, masts, chimneys and bridges.

Note: Simplified guidance on aeroelastic response is given in Annex E.

ONLY FOR REVIEW PURPOSE

SECTION 4 WIND VELOCITY AND VELOCITY PRESSURE

4.1 Basis for calculation

(1) The wind velocity and the velocity pressure are composed of a mean and a fluctuating component.

The mean wind velocity v_m should be determined from the basic wind velocity v_b which depends on the wind climate as described in 4.2, and the height variation of the wind determined from the terrain roughness and orography as described in 4.3. The peak velocity pressure is determined in 4.5.

The fluctuating component of the wind is represented by the turbulence intensity defined in 4.4.

Note: The National Annex may provide National climatic information from which the mean wind velocity v_m, the peak velocity pressure q_p and additional values may be directly obtained for the terrain categories considered.

4.2 Basic values

(1)P The fundamental value of the basic wind velocity, $v_{b,0}$, is the characteristic 10 minutes mean wind velocity, irrespective of wind direction and time of year, at 10 m above ground level in open country terrain with low vegetation such as grass and isolated obstacles with separations of at least 20 obstacle heights.

Note 1: This terrain corresponds to terrain category II in Table 4.1.

Note 2: The value of the basic wind velocity, $v_{b,0}$, may be given in the National Annex.

(2)P The basic wind velocity shall be calculated from Expression (4.1).

$$v_b = c_{dir} \cdot c_{season} \cdot v_{b,0} \qquad (4.1)$$

Where:

v_b is the basic wind velocity, defined as a function of wind direction and time of year at 10 m above ground of terrain category II

$v_{b,0}$ is the fundamental value of the basic wind velocity, see (1)P

c_{dir} is the directional factor, see Note 2.

c_{season} is the season factor, see Note 3.

Note 1: Where the influence of altitude on the basic wind velocity v_b is not included in the specified fundamental value $v_{b,0}$ the National Annex may give a procedure to take it into account.

Note 2: The value of the directional factor, $c_{dir,}$ for various wind directions may be found in the National Annex. The recommended value is 1.0.

Note 3: The value of the season factor, c_{season}, may be given in the National Annex. The recommended value is 1.0.

ONLY FOR REVIEW PURPOSE

Note 4: The 10 minutes mean wind velocity having the probability p for an annual exceedence is determined by multiplying the basic wind velocity v_b in 4.2 (2)P by the probability factor, c_{prob} given by Expression (4.2). See also EBCS EN 1991-1-6.

$$C_{prob} = \left(\frac{1 - K \cdot ln\left(-ln\left(1-p\right)\right)}{1 - K \cdot ln\left(-ln\left(0.98\right)\right)} \right) \quad (4.2)$$

Where:

K is the shape parameter depending on the coefficient of variation of the extreme-value distribution.

n is the exponent.

Note 5: The values for *K* and *n* may be given in the National Annex. The recommended values are 0.2 for *K* and 0.5 for n.

(3) For temporary structures and for all structures in the execution phase, the seasonal factor c_{season} may be used. For transportable structures, which may be used at any time in the year, c_{season} should be taken equal to 1.0.

Note: See also EBCS EN 1991-1-6.

4.3 Mean wind

4.3.1 Variation with height

(1) The mean wind velocity $v_m(z)$ at a height z above the terrain depends on the terrain roughness and orography and on the basic wind velocity, v_b, and should be determined using Expression (4.3)

$$v_m(z) = c_r(z) \cdot c_0(z) \cdot v_b \quad (4.3)$$

Where:

$c_r(z)$ is the roughness factor, given in 4.3.2

$c_0(z)$ is the orography factor, taken as 1.0 unless otherwise specified in 4.3.3

Note 1: Information on c_0 may be given in the National Annex. If the orography is accounted for in the basic wind velocity, the recommended value is 1.0.

Note 2: Design charts or tables for $v_m(z)$ may be given in the National Annex.

The influence of neighbouring structures on the wind velocity should be considered (see 4.3.4).

4.3.2 Terrain roughness

(1) The roughness factor, $c_r(z)$, accounts for the variability of the mean wind velocity at the site of the structure due to:

- the height above ground level
- the ground roughness of the terrain upwind of the structure in the wind direction considered

ONLY FOR REVIEW PURPOSE

Note: The procedure for determining cr(z) may be given in the National Annex. The recommended procedure for the determination of the roughness factor at height z is given by Expression (4.4) and is based on a logarithmic velocity profile.

$$c_r(z) = k_r \cdot ln\left(\frac{z}{z_0}\right) \quad \text{for} \quad z_{min} \le z \le z_{max}$$
$$c_r(z) = c_r(z_{min}) \quad \text{for} \quad z \le z_{min} \tag{4.4}$$

where:

z_0 is the roughness length

k_r terrain factor depending on the roughness length z_0 calculated using

$$k_r = 0.19 \cdot \left(\frac{z_0}{z_{0,II}}\right)^{0.07} \tag{4.5}$$

Where:

$z_{0,II}$ 0.05 m (terrain category II, Table 4.1)

z_{min} is the minimum height defined in Table 4.1

z_{max} is to be taken as 200 m, unless otherwise specified in the National Annex

z_0, z_{min} depend on the terrain category. Recommended values are given in Table 4.1 depending on five representative terrain categories.

Expression (4.4) is valid when the upstream distance with uniform terrain roughness is long enough to stabilise the profile sufficiently. See (2).

Table 4.1 — Terrain categories and terrain parameters

Terrain category	Z_0 m	Z_{min} m
0 Sea or coastal area exposed to the open sea	0.003	1
I Lakes or flat and horizontal area with negligible vegetation and without obstacles	0.01	1
II Area with low vegetation such as grass and isolated obstacles (trees, buildings) with separations of at least 20 obstacle height	0.05	2
III Area with regular cover of vegetation or buildings or with isolated obstacles with separations of maximum 20 obstacle heights (such as villages, suburban terrain, permanent forest)	0.3	5
IV Area in which at least 15 % of the surface is covered with buildings and their average height exceeds 15 m	1.0	10
The terrain categories are illustrated in Annex A.1.		

ONLY FOR REVIEW PURPOSE

(2) The terrain roughness to be used for a given wind direction depends on the ground roughness and the distance with uniform terrain roughness in an angular sector around the wind direction. Small areas (less than 10% of the area under consideration) with deviating roughness may be ignored. See Figure 4.1.

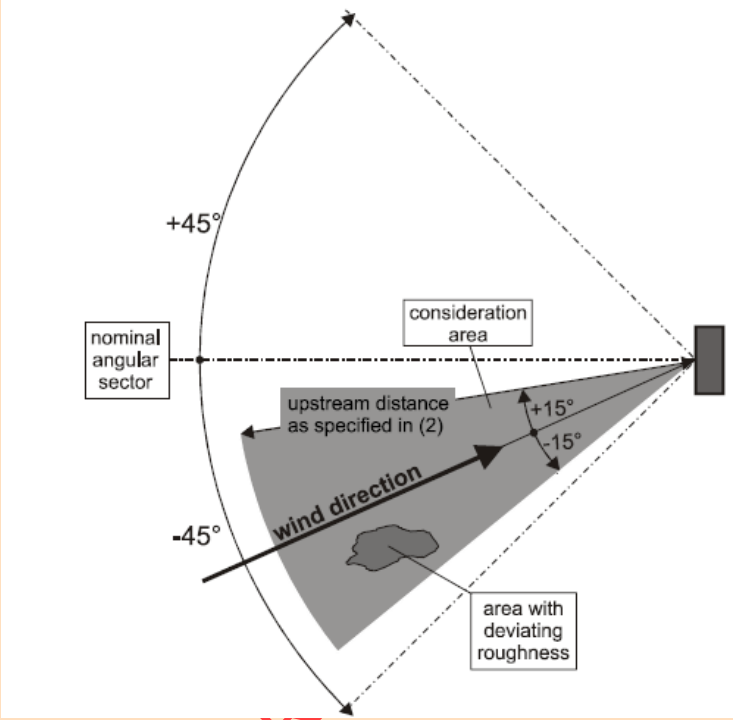

Figure 4.1 – Assessment of terrain roughness

Note: The National Annex may give definitions of the angular sector and of the upstream distance. The recommended value of the angular sector may be taken as the 30° angular sector within ±15° from the wind direction. The recommended value for the upstream distance may be obtained from Annex A.2.

(3) When a pressure or force coefficient is defined for a nominal angular sector, the lowest roughness length within any 30^0 angular wind sector should be used.

(4) When there is choice between two or more terrain categories in the definition of a given area, then the area with the lowest roughness length should be used.

4.3.3 Terrain orography

(1) Where orography (e.g. hills, cliffs etc.) increases wind velocities by more than 5% the effects should be taken into account using the orography factor c_O.

Note: The procedure to be used for determining c_O may be given in the National Annex. The recommended procedure is given in Annex A.3.

(2) The effects of orography may be neglected when the average slope of the upwind terrain is less than 3^0. The upwind terrain may be considered up to a distance of 10 times the height of the isolated orographic feature.

ONLY FOR R

4.3.4 Large and considerably higher neighbouring structures

(1) If the structure is to be located close to another structure, that is at least twice as high as the average height of its neighbouring structures, then it could be exposed (dependent on the properties of the structure) to increased wind velocities for certain wind directions. Such cases should be taken into account.

Note: The National Annex may give a procedure to take account of this effect. .A recommended conservative first approximation is given in Annex A.4.

4.3.5 Closely spaced buildings and obstacles

(1) The effect of closely spaced buildings and other obstacles may be taken into account.

Note: The National Annex may give a procedure. A recommended first approximation is given in Annex A.5. In rough terrain closely spaced buildings modify the mean wind flow near the ground, as if the ground level was raised to a height called displacement height h_{dis}.

4.4 Wind turbulence

(1) The turbulence intensity $I_v(z)$at height z is defined as the standard deviation of the turbulence divided by the mean wind velocity.

Note 1: The turbulent component of wind velocity has a mean value of 0 and a standard deviation σ_v. The standard deviation of the turbulence σ_v may be determined using Expression (4.6).

$$\sigma = k_r \cdot v_b \cdot k_I \qquad (4.6)$$

For the terrain factor k_r see Expression (4.5), for the basic wind velocity v_b see Expression (4.1) and for turbulence factor k_I see Note 2.

Note 2: The recommended rules for the determination of $I_v(z)$ are given in Expression (4.7)

$$I_v(z) = \frac{\sigma_v}{v_m(z)} = \frac{k_I}{c_o(z)\cdot \ln(z/z_0)} \quad \text{for} \quad z_{min} \le z \le z_{max}$$
$$I_v(z) = I_v(z_{min}) \quad \text{for} \quad z < z_{min} \qquad (4.7)$$

where:

k_I is the turbulence factor. The value of k_I may be given in the National Annex. The recommended value is k_I= 1.0.

c_o is the orography factor as described in 4.3.3

z_0 is the roughness length, given in Table 4.1

4.5 Peak velocity pressure

(1) The peak velocity pressure qp(z) at height z, which includes mean and short-term velocity fluctuations, should be determined.

Note 1: The National Annex may give rules for the determination of $q_p(z)$. The recommended rule is given in Expression (4.8).

ONLY FOR REVIEW PURPOSE

$$q_p(z) = \left[1 + 7 \cdot I_v(z)\right] \cdot \frac{1}{2} \cdot \rho \cdot v_M^2(z) = c_e(z) \cdot q_b \quad (4.8)$$

where:

ρ is the air density, which depends on the altitude, temperature and barometric pressure to be expected in the region during wind storms

$c_e(z)$ is the exposure factor given in Expression (4.9)

$$c_e(z) = \frac{q_p(z)}{q_b} \quad (4.9)$$

q_b is the basic velocity pressure given in Expression (4.10)

$$q_b = \frac{1}{2} \cdot \rho \cdot v_b^2 \quad (4.10)$$

The value 7 in Expression (4.8) is based on a peak factor equal to 3.5 and is consistent with the values of the pressure and force coefficients in Section 7.

For flat terrain where $c_0(z) = 1.0$ (see 4.3.3), the exposure factor $c_e(z)$ is illustrated in Figure 4.2 as a function of height above terrain and a function of terrain category as defined in Table 4.1.

N PURPOSE

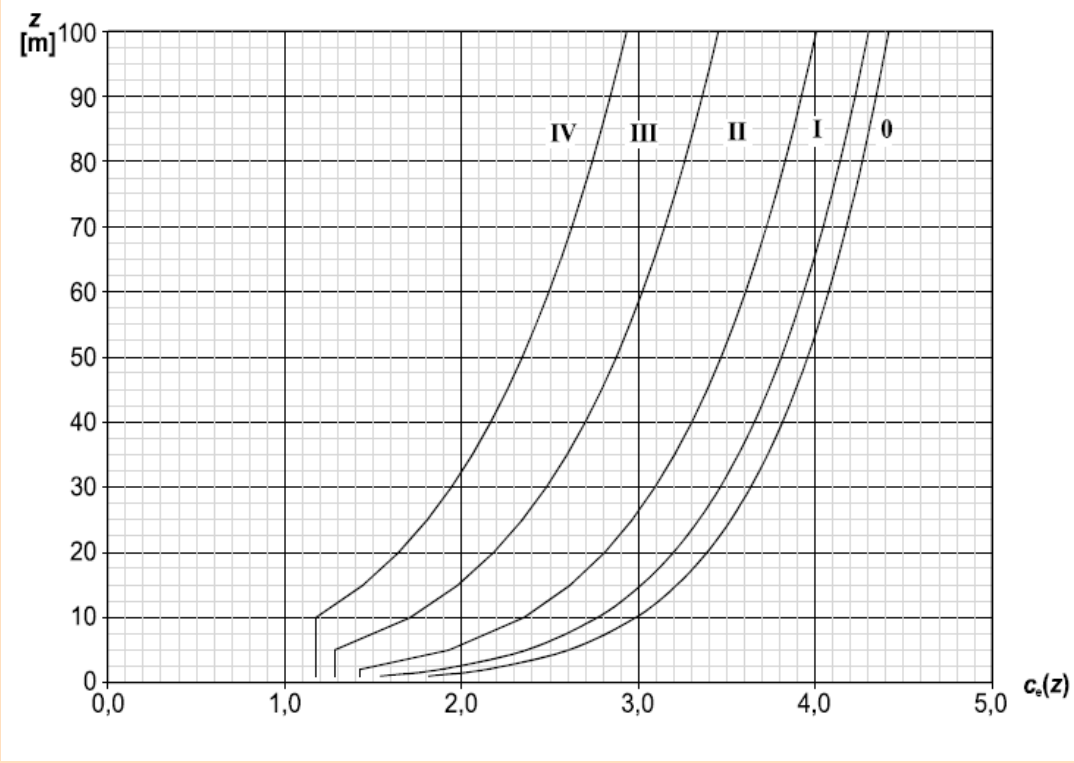

Figure 4.2 — Illustrations of the exposure factor $c_e(z)$ for c_O=1,0, k_I=1.0

Note 2: The values for ρ may be given in the National Annex. The recommended value is 1.25 kg/m^3.

SECTION 5 WIND ACTIONS

5.1 General

(1)P Wind actions on structures and structural elements shall be determined taking account of both external and internal wind pressures.

Note: A summary of calculation procedures for the determination of wind actions is given in Table 5.1.

Table 5.1 —Calculation procedures for the determination of wind actions

Parameter	Subject Reference
peak velocity pressure q_p	
basic wind velocity v_b	4.2 (2)P
reference height z_e	Section 7
terrain category	Table 4.1
characteristic peak velocity pressure q_p	4.5 (1)
turbulence intensity I_v	4.4
mean wind velocity v_m	4.3.1
orography coefficient $c_o(z)$	4.3.3
roughness coefficient $c_r(z)$	4.3.2
Wind pressures, e.g. for cladding, fixings and structural parts	
internal pressure coefficient c_{pi}	Section 7
external pressure coefficient c_{pe}	Section 7
external wind pressure: $we = q_p c_{pe}$	5.2 (1)
internal wind pressure: $w_i = q_p c_{pi}$	5.2 (2)
Wind forces on structures, e.g. for overall wind effects	
structural factor: $c_s c_d$	6
wind force F_w calculated from force coefficients	5.3 (2)
wind force F_w calculated from pressure coefficients	5.3 (3)

ONLY FOR REVIEW PURPOSE

5.2 Wind pressure on surfaces

(1) The wind pressure acting on the external surfaces, w_e, should be obtained from Expression (5.1).

$$w_e = q_p(z) \cdot c_{pe} \qquad (5.1)$$

where:

$q_p(z_e)$ is the peak velocity pressure

z_e is the reference height for the external pressure given in Section 7

c_{pe} is the pressure coefficient for the external pressure, see Section 7.

Note: $q_p(z)$ is defined in 4.5

(2) The wind pressure acting on the internal surfaces of a structure, w_i, should be obtained from Expression (5.2)

$$w_i = q_p(z_i) \cdot c_{pi} \qquad (5.2)$$

where:

$q_p(z_i)$ is the peak velocity pressure

z_i is the reference height for the internal pressure given in Section 7

c_{p_i} is the pressure coefficient for the internal pressure given in Section 7

Note: $q_p(z)$ is defined in 4.5

(3) The net pressure on a wall, roof or element is the difference between the pressures on the opposite surfaces taking due account of their signs. Pressure, directed towards the surface is taken as positive, and suction, directed away from the surface as negative. Examples are given in Figure 5.1.

ONLY FOR REVIEW PURPOSE

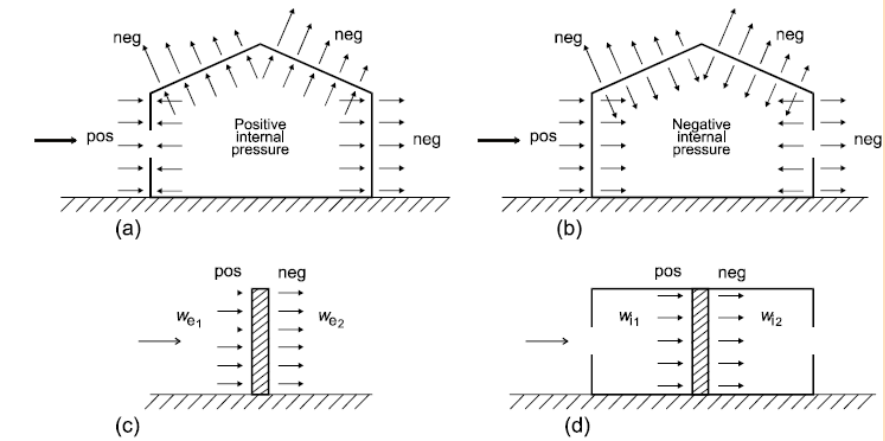

Figure 5.1 — Pressure on surfaces

5.3 Wind forces

(1) The wind forces for the whole structure or a structural component should be determined:

- by calculating forces using force coefficients (see (2)) or
- by calculating forces from surface pressures (see (3))

(2) The wind force Fw acting on a structure or a structural component may be determined directly by using Expression (5.3)

$$F_w = c_s c_d \cdot c_f \cdot q_p(z_e) \cdot A_{ref} \qquad (5.3)$$

or by vectorial summation over the individual structural elements (as shown in 7.2.2) by using Expression (5.4)

$$F_w = c_s c_d \cdot \sum_{\text{elements}} c_f \cdot q_p(z_e) \cdot A_{ref} \qquad (5.4)$$

where:

$c_s c_d$ is the structural factor as defined in Section 6

c_f is the force coefficient for the structure or structural element, given in Section 7 or Section 8

$q_p(z_e)$ is the peak velocity pressure (defined in 4.5) at reference height z_e (defined in Section 7 or Section 8)

A_{ref} is the reference area of the structure or structural element, given in Section 7 or Section 8

Note: Section 7 gives $c_f$values for structures or structural elements such as prisms, cylinders, roofs, signboards, plates and lattice structures etc. These values include friction effects. Section 8 gives $c_f$values for bridges.

(3) The wind force, F_w acting on a structure or a structural element may be determined by vectorial summation of the forces $F_{w,e}$, $F_{w,i}$ and F_{fr} calculated from the external and internal pressures using Expressions (5.5) and (5.6) and the frictional forces resulting from the friction of the wind parallel to the external surfaces, calculated using Expression (5.7).

external forces:

$$F_{w,e} = c_s c_d \cdot \sum_{\text{surfaces}} W_e \cdot A_{ref} \qquad (5.6)$$

internal forces:

$$F_{w,i} = \sum_{\text{surfaces}} W_i \cdot A_{ref}$$

friction forces:

ONLY FOR REVIEW PURPOSE

$$F_{fr} = c_{fr} \cdot q_p(z_e) \cdot A_{ref} \qquad (5.7)$$

where:

$c_s c_d$ is the structural factor as defined in Section 6

w_e is the external pressure on the individual surface at height z_e, given in Expression (5.1)

w_i is the internal pressure on the individual surface at height z_i, given in Expression (5.2)

A_{ref} is the reference area of the individual surface

c_{fr} is the friction coefficient derived from 7.5

A_{fr} is the area of external surface parallel to the wind, given in 7.5.

Note 1: For elements (e.g. walls, roofs), the wind force becomes equal to the difference between the external and internal resulting forces.

Note 2: Friction forces F_{fr}act in the direction of the wind components parallel to external surfaces.

(4) The effects of wind friction on the surface can be disregarded when the total area of all surfaces parallel with (or at a small angle to) the wind is equal to or less than 4 times the total area of all external surfaces perpendicular to the wind (windward and leeward).

(5) In the summation of the wind forces acting on building structures, the lack of correlation of wind pressures between the windward and leeward sides may be taken into account.

Note: The National Annex may determine whether this lack of correlation may be applied generally or be restricted to walls as applied in 7.2.2 (3). It is recommended to consider the lack of correlation only for walls (see 7.2.2 (3)).

ONLY FOR REVIEW PURPOSE

SECTION 6 STRUCTURAL FACTOR $C_S C_D$

6.1 General

(1) The structural factor $c_s c_d$ should take into account the effect on wind actions from the non-simultaneous

occurrence of peak wind pressures on the surface together with the effect of the vibrations of the structure due to turbulence.

Note: The structural factor $c_s c_d$ may be separated into a size factor c_s and a dynamic factor c_d, based on 6.3. Information on whether the structural factor $c_s c_d$ should be separated or not may be given in the National Annex.

6.2 Determination of $c_s c_d$

(1) $c_s c_d$ should be determined as follows:

a) For buildings with a height less than 15 m the value of $c_s c_d$ may be taken as 1.

b) For facade and roof elements having a natural frequency greater than 5 Hz, the value of $c_s c_d$ may be taken as 1.

c) For framed buildings which have structural walls and which are less than 100 m high and whose height is less than 4 times the in-wind depth, the value of $c_s c_d$ may be taken as 1.

d) For chimneys with circular cross-sections whose height is less than 60 m and 6.5 times the diameter, the value of $c_s c_d$ may be taken as 1.

e) Alternatively, for cases a), b), c) and d) above, values of $c_s c_d$ may be derived from 6.3.1.

f) For civil engineering works (other than bridges, which are considered in Section 8), and chimneys and buildings outside the limitations given in c) and d) above, $c_s c_d$ should be derived either from 6.3 or taken from Annex D.

Note 1: Natural frequencies of facade and roof elements may be calculated using Annex F (glazing spans smaller than 3 m usually lead to natural frequencies greater than 5 Hz).

Note 2: The figures in Annex D give values of $c_s c_d$ for various types of structures. The figures give envelopes of safe values calculated from models complying with the requirements in 6.3.1.

ONLY FOR REVIEW PURPOSE

6.3 Detailed procedure

6.3.1 Structural factor $c_s c_d$

(1) The detailed procedure for calculating the structural factor $c_s c_d$ is given in Expression (6.1). This procedure can only be used if the conditions given in 6.3.1 (2) apply.

$$c_s c_d = \frac{1 + 2 \cdot k_p \cdot I_v(z_s) \cdot \sqrt{B^2 + R^2}}{1 + 7 \cdot I_v(Z_s)} \qquad (6.1)$$

where:

z_e is the reference height, see Figure 6.1. For structures where Figure 6.1 does not apply ze may be equal to h, the height of the structure.

k_p is the peak factor defined as the ratio of the maximum value of the fluctuating part of the response to its standard deviation

I_v is the turbulence intensity defined in 4.4

B^2 is the background factor, allowing for the lack of full correlation of the pressure on the structure surface

R^2 is the resonance response factor, allowing for turbulence in resonance with the vibration mode

Note 1: The size factor c_s takes into account the reduction effect on the wind action due to the non-simultaneity of occurrence of the peak wind pressures on the surface and may be obtained from Expression (6.2):

$$c_s = \frac{1+7\cdot I_v(z_s)\cdot\sqrt{B^2}}{1+7\cdot I_v(Z_s)} \qquad (6.2)$$

Note 2: The dynamic factor c_d takes into account the increasing effect from vibrations due to turbulence in resonance with the structure and may be obtained from Expression (6.3):

$$c_d = \frac{1+2\cdot k_p\cdot I_v(z_s)\cdot\sqrt{B^2+R^2}}{1+7\cdot I_v(Z_s)\cdot\sqrt{B^2}} \qquad (6.3)$$

Note 3: The procedure to be used to determine k_p, B and R may be given in the National Annex. A recommended procedure is given in Annex B. An alternative procedure is given in Annex C. As an indication to the users the differences in $c_s c_d$ using Annex C compared to Annex B does not exceed approximately 5%.

(2)P Expression (6.1) shall only be used if all of the following requirements are met:

– the structure corresponds to one of the general shapes shown in Figure 6.1,

– only the along-wind vibration in the fundamental mode is significant, and this mode shape has a constant sign.

Note: The contribution to the response from the second or higher along wind vibration modes is negligible.

ONLY FOR REVIEW PURPOSE

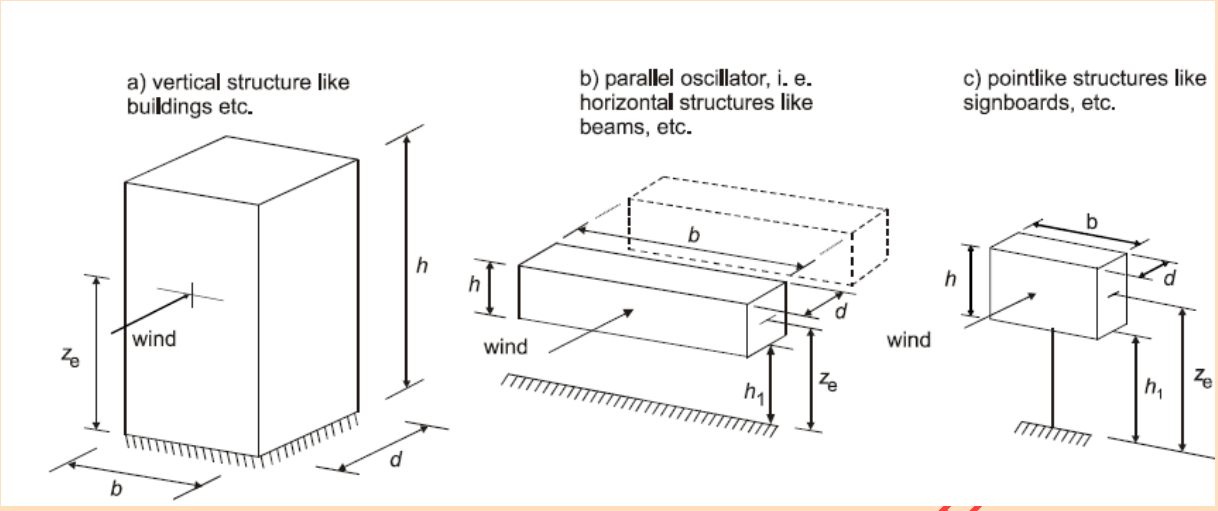

Note: Limitations are also given in 1.1 (2)

$z_e = 0.6.h \lambda z_{min}$ $z_e = h_1 + h/2 \lambda z_{min}$ $z_e = h_1 + h/2 \lambda z_{min}$

Figure 6.1 - General shapes of structures covered by the design procedure. The structural dimensions and the reference height used are also shown.

ONLY FOR REVIEW PURPOSE

6.3.2 Serviceability assessments

(1) For serviceability assessments, the maximum along-wind displacement and the standard deviation of the characteristic along-wind acceleration of the structure at height *z* should be used. For the maximum along-wind displacement the equivalent static wind force defined in 5.3 should be used.

Note: The National Annex may give a method for determining the along-wind displacement and the standard deviation of the along-wind acceleration. The recommended method is given in Annex B. An alternative method is given in Annex C.

6.3.3 Wake buffeting

(1) For slender buildings (h/d> 4) and chimneys (h/d> 6.5) in tandem or grouped arrangement, the effect of increased turbulence in the wake of nearby structures (wake buffeting) should be taken into account.

(2) Wake buffeting effects may be assumed to be negligible if at least one of the following conditions applies:

– The distance between two buildings or chimneys is larger than 25 times the cross wind dimension of the upstream building or chimney.

– The natural frequency of the downstream building or chimney is higher than 1 Hz.

Note: If 6.3.3 (2) is not fulfilled wind tunnel tests or specialist advice is recommended.

SECTION 7 PRESSURE AND FORCE COEFFICIENTS

7.1 General

(1) This section should be used to determine the appropriate aerodynamic coefficients for structures. Depending on the structure the appropriate aerodynamic coefficient will be:

– Internal and external pressure coefficients, see 7.1.1 (1),

– Net pressure coefficients, see 7.1.1 (2),

– Friction coefficients, see 7.1.1 (3),

– Force coefficients, see 7.1.1 (4).

7.1.1 Choice of aerodynamic coefficient

(1) Pressure coefficients should be determined for:

– Buildings, using 7.2 for both internal and external pressures, and for

– Circular cylinders, using 7.2.9 for the internal pressures and 7.9.1 for the external pressures

NOTE 1 External pressure coefficients give the effect of the wind on the external surfaces of buildings; internal pressure coefficients give the effect of the wind on the internal surfaces of buildings.

NOTE 2 The external pressure coefficients are divided into overall coefficients and local coefficients. Local coefficients give the pressure coefficients for loaded areas of 1 m^2. They may be used for the design of small elements and fixings. Overall coefficients give the pressure coefficients for loaded areas of 10 m^2. They may be used for loaded areas larger than 10 m^2

(2) Net pressure coefficients should be determined for:

– Canopy roofs, using 7.3

– Free-standing walls, parapets and fences using 7.4

NOTE Net pressure coefficients give the resulting effect of the wind on a structure, structural element or component per unit area.

(3) Friction coefficients should be determined for walls and surfaces defined in 5.2 (3), using 7.5.

(4) Force coefficients should be determined for:

– Signboards, using 7.4.3,

– Structural elements with rectangular cross section, using 7.6,

– Structural elements with sharp edged section, using 7.7,

– Structural elements with regular polygonal section, using 7.8,

– Circular cylinders, using 7.9.2 and 7.9.3,

ONLY FOR REVIEW PURPOSE

– Spheres, using 7.10,

– Lattice structures and scaffoldings, using 7.11,

– Flags, using 7.12.

A reduction factor depending on the effective slenderness of the structure may be applied, using 7.13.

NOTE Force coefficients give the overall effect of the wind on a structure, structural element or component as a whole, including friction, if not specifically excluded.

7.1.2 **Asymmetric and counteracting pressures and forces**

(1) If instantaneous fluctuations of wind over surfaces can give rise to significant asymmetry of loading and the structural form is likely to be sensitive to such loading (e.g. torsion in nominally symmetric single core buildings) then their effect should be taken into account.

(2) For buildings, free-standing canopies and signboards, 7.2, 7.3 and 7.4 should be applied.

NOTE The National Annex may give procedures for other structures. The recommended procedures are:

a) For rectangular structures that are susceptible to torsional effects the pressure distribution given in Figure 7.1 should be applied for the representation of the torsional effects due to an inclined wind or due to lack of correlation between wind forces acting at different places on the structure.

OR REVIEW PURPOSE

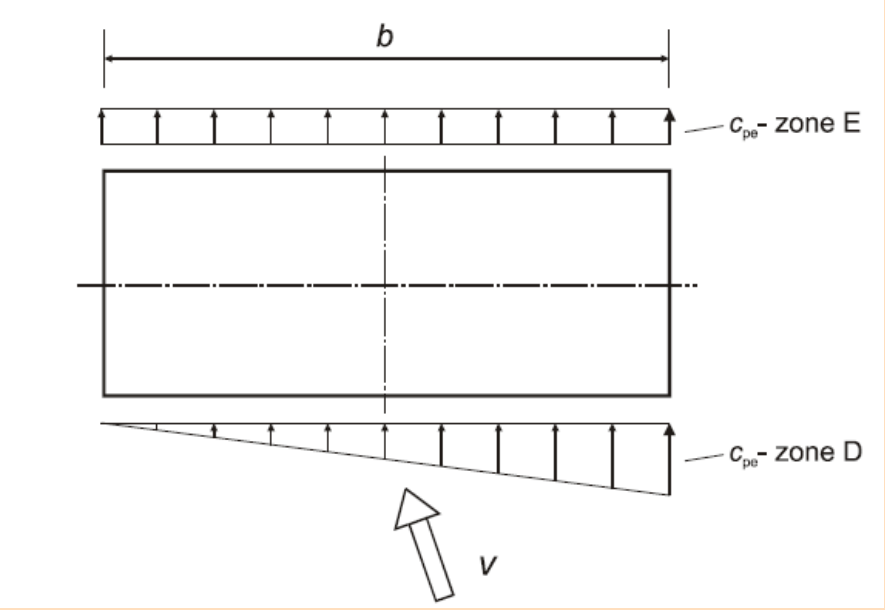

Figure 7.1 — Pressure distribution used to take torsional effects into account. The zones and values for c_{pe} are given in Table 7.1 and Figure 7.5.

b) For other cases an allowance for asymmetry of loading should be made by completely removing the design wind action from those parts of the structure where its action will produce a beneficial effect.

7.1.3 Effects of ice and snow

(1) If ice or snow alters the geometry of a structure so that it changes the reference area or shape, this should be taken into account.

NOTE Further information may be given in the National Annex.

7.2 Pressure coefficients for buildings

7.2.1 General

(1) The external pressure coefficients c_{pe} for buildings and parts of buildings depend on the size of the loaded area A, which is the area of the structure, that produces the wind action in the section to be calculated. The external pressure coefficients are given for loaded areas A of 1 m^2 and 10 m^2 in the tables for the appropriate building configurations as $c_{pe,1}$, for local coefficients, and $c_{pe,10}$, for overall coefficients, respectively.

NOTE 1 Values for $c_{pe,1}$ are intended for the design of small elements and fixings with an area per element of 1 m^2 or less such as cladding elements and roofing elements. Values for $c_{pe,10}$ may be used for the design of the overall load bearing structure of buildings.

NOTE 2 The National Annex may give a procedure for calculating external pressure coefficients for loaded areas above 1 m^2 based on external pressure coefficients $c_{pe,1}$ and $c_{pe,10}$. The recommended procedure for loaded areas up to 10 m^2 is given in Figure 7.2

REVIEW PURPOSE

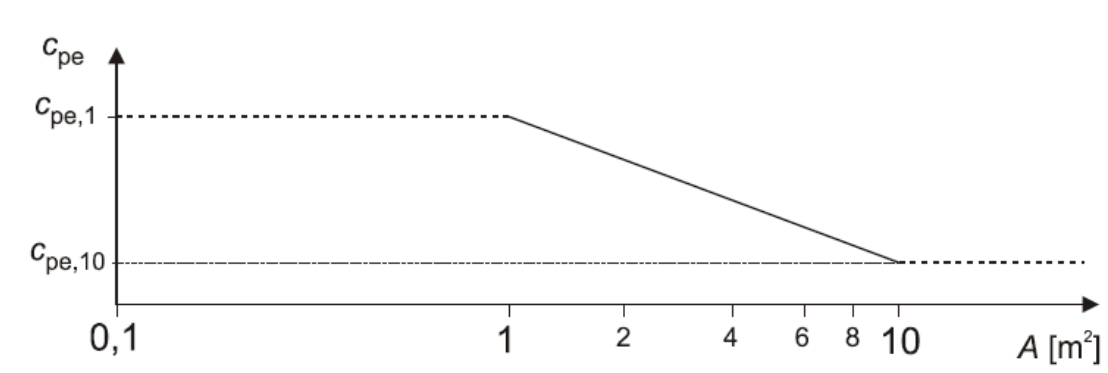

The figure is based on the following:

for 1 m^2 < A < 10 m^2 $c_{pe} = c_{pe,1} - (c_{pe,1} - c_{pe,10}) \log_{10} A$

Figure 7.2 — Recommended procedure for determining the external pressure coefficient c_{pe} for buildings with a loaded area A between 1 m^2 and 10 m^2

(2) The values $c_{pe,10}$ and $c_{pe,1}$ in Tables 7.2 to 7.5 should be used for the orthogonal wind directions 0°, 90°, 180°. These values represent the most unfavourable values

obtained in a range of wind direction θ = ± 45° either side of the relevant orthogonal direction.

(3) For protruding roof corners the pressure on the underside of the roof overhang is equal to the pressure for the zone of the vertical wall directly connected to the protruding roof; the pressure at the top side of the roof overhang is equal to the pressure of the zone, defined for the roof.

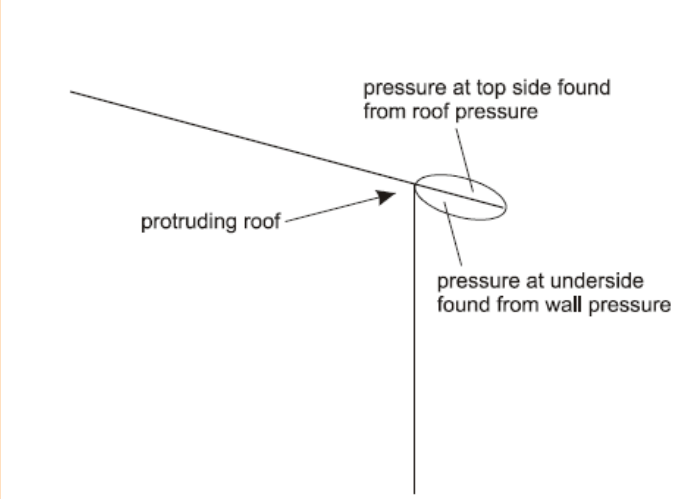

Figure 7.3 — Illustration of relevant pressures for protruding roofs

7.2.2 Vertical walls of rectangular plan buildings

(1) The reference heights, z_e, for windward walls of rectangular plan buildings (zone D, see Figure 7.5) depend on the aspect ratio *h/b* and are always the upper heights of the different parts of the walls. They are given in Figure 7.4 for the following three cases:

– A building, whose height *h* is less than b should be considered to be one part.

– A building, whose height *h* is greater than *b*, but less than 2*b*, may be considered to be two parts, comprising: a lower part extending upwards from the ground by a height equal to *b* and an upper part consisting of the remainder.

– A building, whose height *h*is greater than 2*b* may be considered to be in multiple parts, comprising: a lower part extending upwards from the ground by a height equal to *b*; an upper part extending downwards from the top by a height equal to b and a middle region, between the upper and lower parts, which may be divided into horizontal strips with a height h_{strip} as shown in Figure 7.4.

NOTE The rules for the velocity pressure distribution for leeward wall and sidewalls (zones A, B, C and E, see Figure 7.5) may be given in the National Annex or be defined for the individual project. The recommended procedure is to take the reference height as the height of the building.

ONLY FOR REVIEW

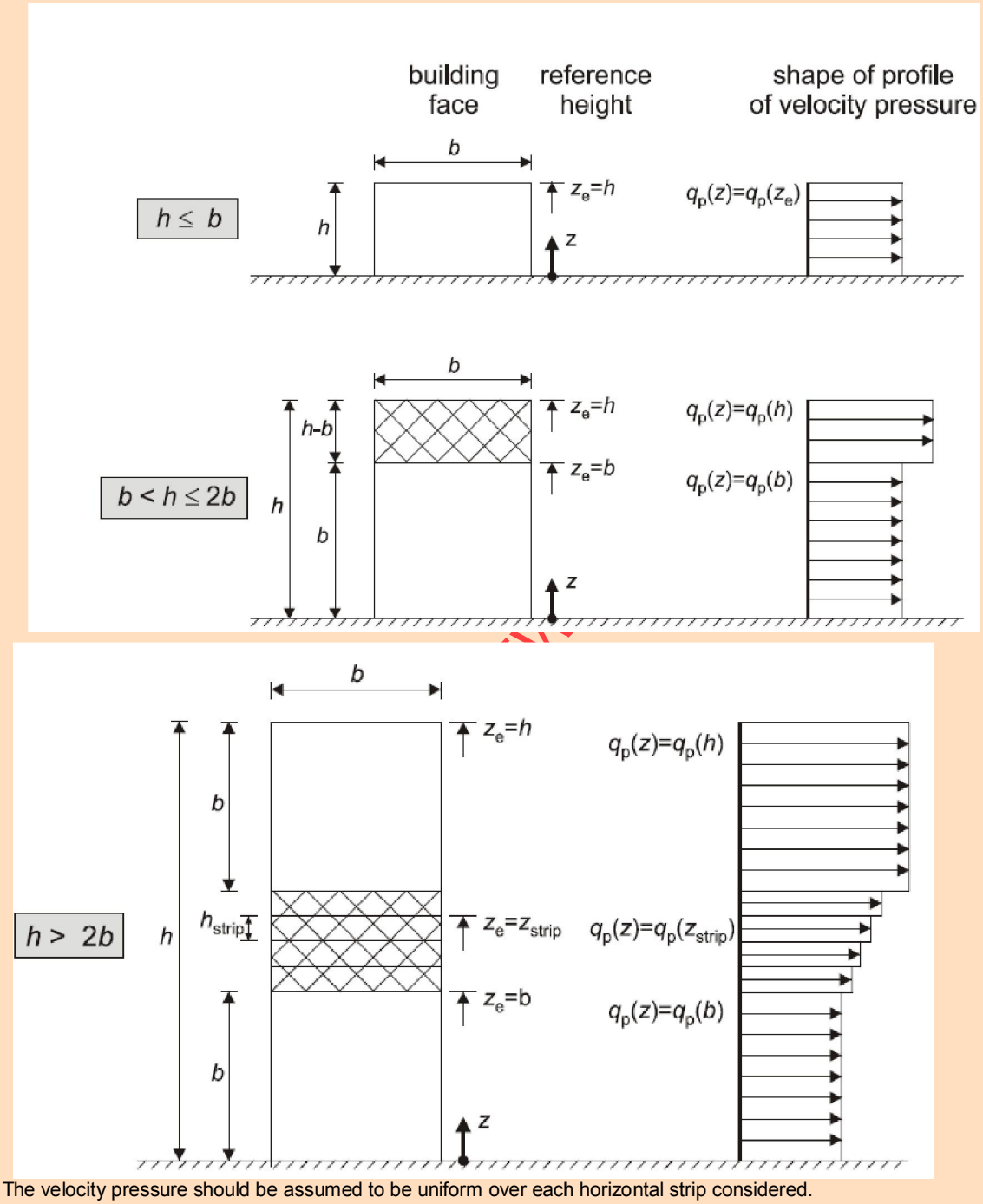

NOTE The velocity pressure should be assumed to be uniform over each horizontal strip considered.

Figure 7.4 — Reference height, z_e, depending on h and b, and corresponding velocity pressure profile

(2) The external pressure coefficients $c_{pe,10}$ and $c_{pe,1}$ for zone A, B, C, D and E are defined in Figure 7.5.

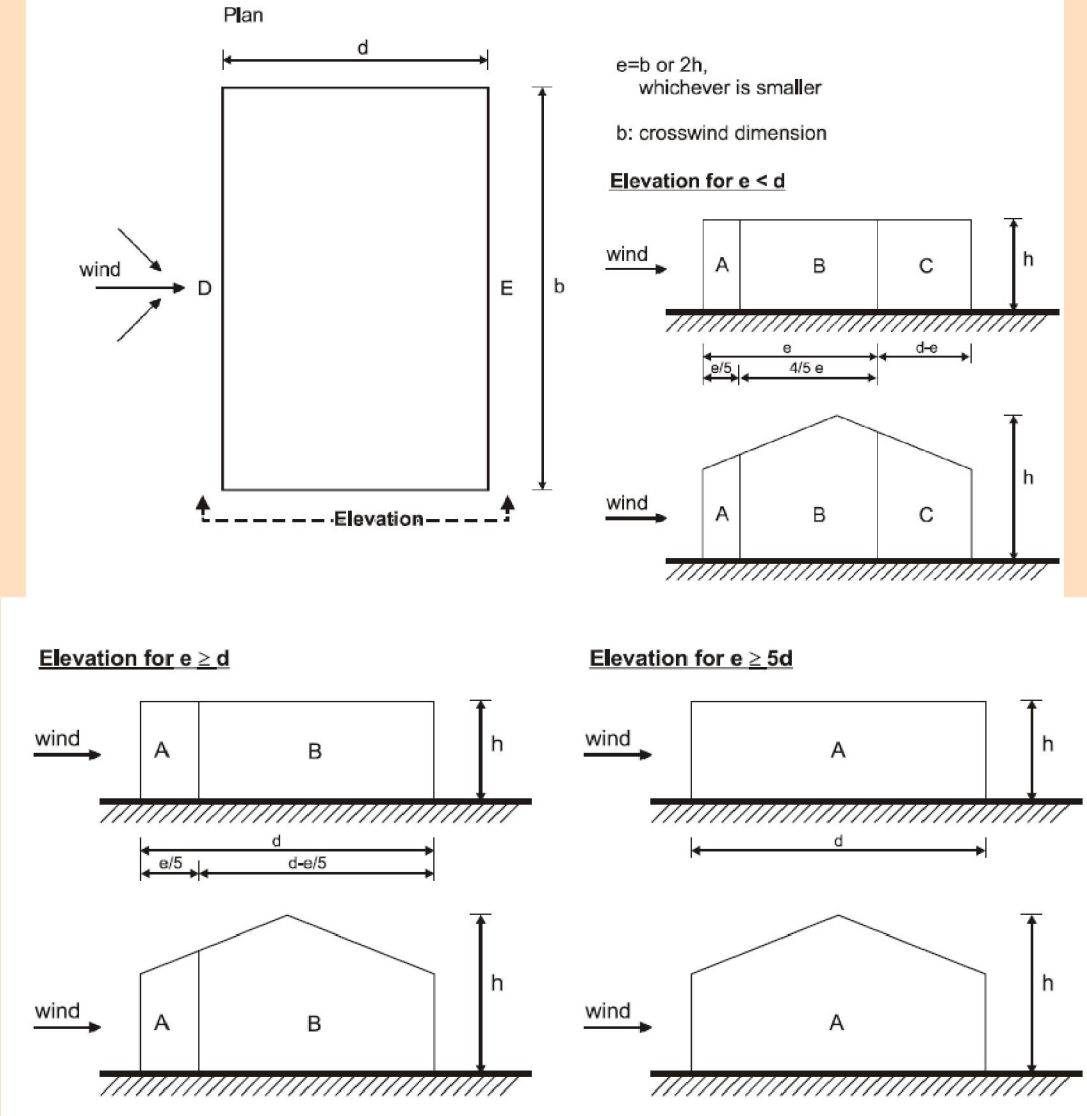

Figure 7.5 — Key for vertical walls

NOTE 1 The values of $c_{pe,10}$ and $c_{pe,1}$ may be given in the National Annex. The recommended values are given in Table 7.1, depending on the ratio h/d. For intermediate values of h/d, linear interpolation may be applied. The values of Table 7.1 also apply to walls of buildings with inclined roofs, such as duopitch and monopitch roofs.

Table 7.1 — Recommended values of external pressure coefficients for vertical walls of rectangular plan Buildings

Zone	A		B		C		D		E	
h/d	$c_{pe,10}$	$c_{pe,1}$	$c_{pe,10}$	$c_{pe,1}$	$c_{pe,10}$	$c_{pe,1}$	$c_{pe,10}$	$c_{pe,1}$	$c_{pe,10}$	$c_{pe,1}$
5	-1.2	-1.4	-0.8	-1.1	-0.5		+0.8	+1.0	-0.7	
1	-1.2	-1.4	-0.8	-1.1	-0.5		+0.8	+1.0	-0.5	
≤ 0.25	-1.2	-1.4	-0.8	-1.1	-0.5		+0.7	+1.0	-0.3	

NOTE 2 For buildings with *h/d*> 5, the total wind loading may be based on the provisions given in Sections 7.6 to 7.8 and 7.9.2.

(3) In cases where the wind force on building structures is determined by application of the pressure coefficients c_{pe}on windward and leeward side (zones D and E) of the building simultaneously, the lack of correlation of wind pressures between the windward and leeward side may have to be taken into account.

NOTE The lack of correlation of wind pressures between the windward and leeward side may be considered as follows. For buildings with *h/d* ≥ 5 the resulting force is multiplied by 1. For buildings with *h/d* ≤ 1, the resulting force is multiplied by 0.85. For intermediate values of h/d, linear interpolation may be applied.

7.2.3 Flat roofs

(1) Flat roofs are defined as having a slope (α) of –5°< α < 5°

(2) The roof should be divided into zones as shown in Figure 7.6.

(3) The reference height for flat roof and roofs with curved or mansard eaves should be taken as h. The reference height for flat roofs with parapets should be taken as *h* + *h*p, see Figure 7.6.

(4) Pressure coefficients for each zone are given in Table 7.2.

(5) The resulting pressure coefficient on the parapet should be determined using 7.4.

ONLY FOR REVIEW PURPOSE

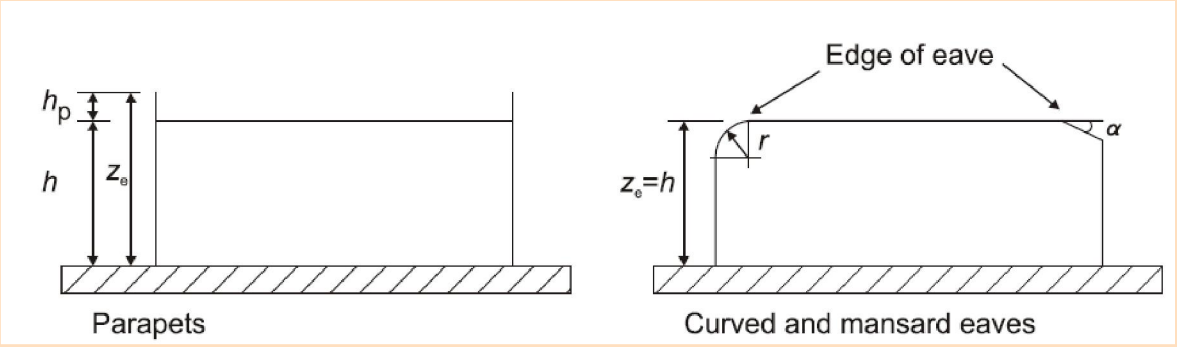

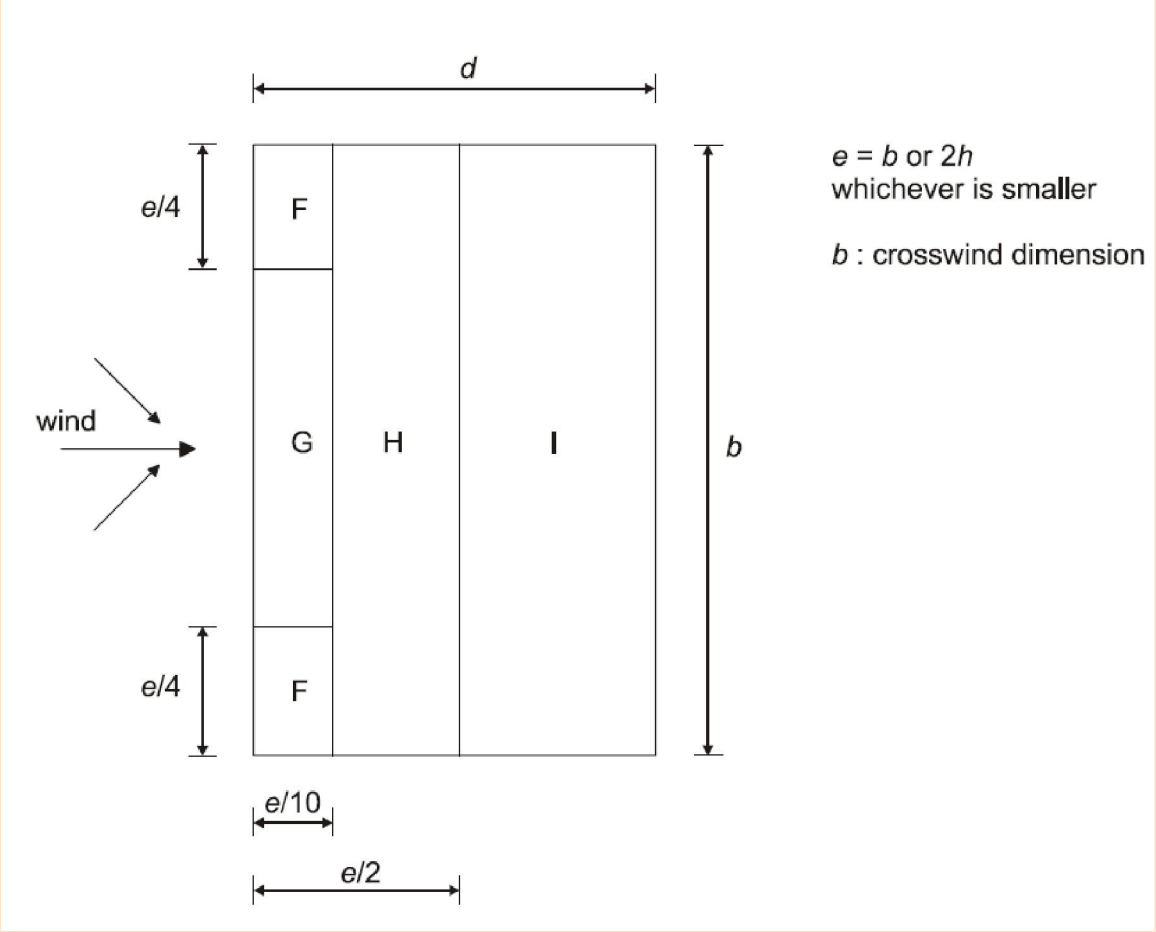

Figure 7.6 — Key for flat roofs

Table 7.2-External pressure coefficients for flat roofs

Roof type		Zone							
		F		G		H		I	
		$C_{pe,10}$	$C_{pe,1}$	$C_{pe,10}$	$C_{pe,1}$	$C_{pe,10}$	$C_{pe,1}$	$C_{pe,10}$	$C_{pe,1}$
Sharp eaves		-1,8	-2,5	-1,2	-2,0	-0,7	-1,2	+0,2	
								-0,2	
With Parapets	h_p/h=0,025	-1,6	-2,2	-1,1	-1,8	-0,7	-1,2	+0,2	
								-0,2	
	h_p/h=0,05	-1,4	-2,0	-0,9	-1,6	-0,7	-1,2	+0,2	
								-0,2	
	h_p/h=0,10	-1,2	-1,8	-0,8	-1,4	-0,7	-1,2	+0,2	
								-0,2	
Curved Eaves	r/h = 0,05	-1,0	-1,5	-1,2	-1,8	-0,4		+0,2	
								-0,2	
	r/h = 0,10	-0,7	-1,2	-0,8	-1,4	-0,3		+0,2	
								-0,2	
	r/h = 0,20	-0,5	-0,8	-0,5	-0,8	-0,3		+0,2	
								-0,2	
Mansard Eaves	α = 30°	-1,0	-1,5	-1,0	-1,5	-0,3		+0,2	
								-0,2	
	α = 45°	-1,2	-1,8	-1,3	-1,9	-0,4		+0,2	
								-0,2	
	α = 60°	-1,3	-1,9	-1,3	-1,9	-0,5		+0,2	
								-0,2	

NOTE 1 For roofs with parapets or curved eaves, linear interpolation may be used for intermediate values of hp/h and r/h.

NOTE 2 For roofs with mansard eaves, linear interpolation between α = 30°, 45° and α = 60° may be used. For α > 60° linear interpolation between the values for α = 60° and the values for flat roofs with sharp eaves may be used.

NOTE 3 In Zone I, where positive and negative values are given, both values shall be considered.

NOTE 4 For the mansard eave itself, the external pressure coefficients are given in Table 7.4 "External pressure coefficients for duopitch roofs: wind direction 0° ", Zone F and G, depending on the pitch angle of the mansard eave.

NOTE 5 For the curved eave itself, the external pressure coefficients are given by linear interpolation along the curve, between values on the wall and on the roof.

ONLY FOR REVIEW PURPOSE

7.2.4 **Monopitch roofs**

(1) The roof, including protruding parts, should be divided into zones as shown in Figure 7.7.

(2) The reference height z_e should be taken equal to h.

(3) The pressure coefficients for each zone that should be used are given in Table 7.3.

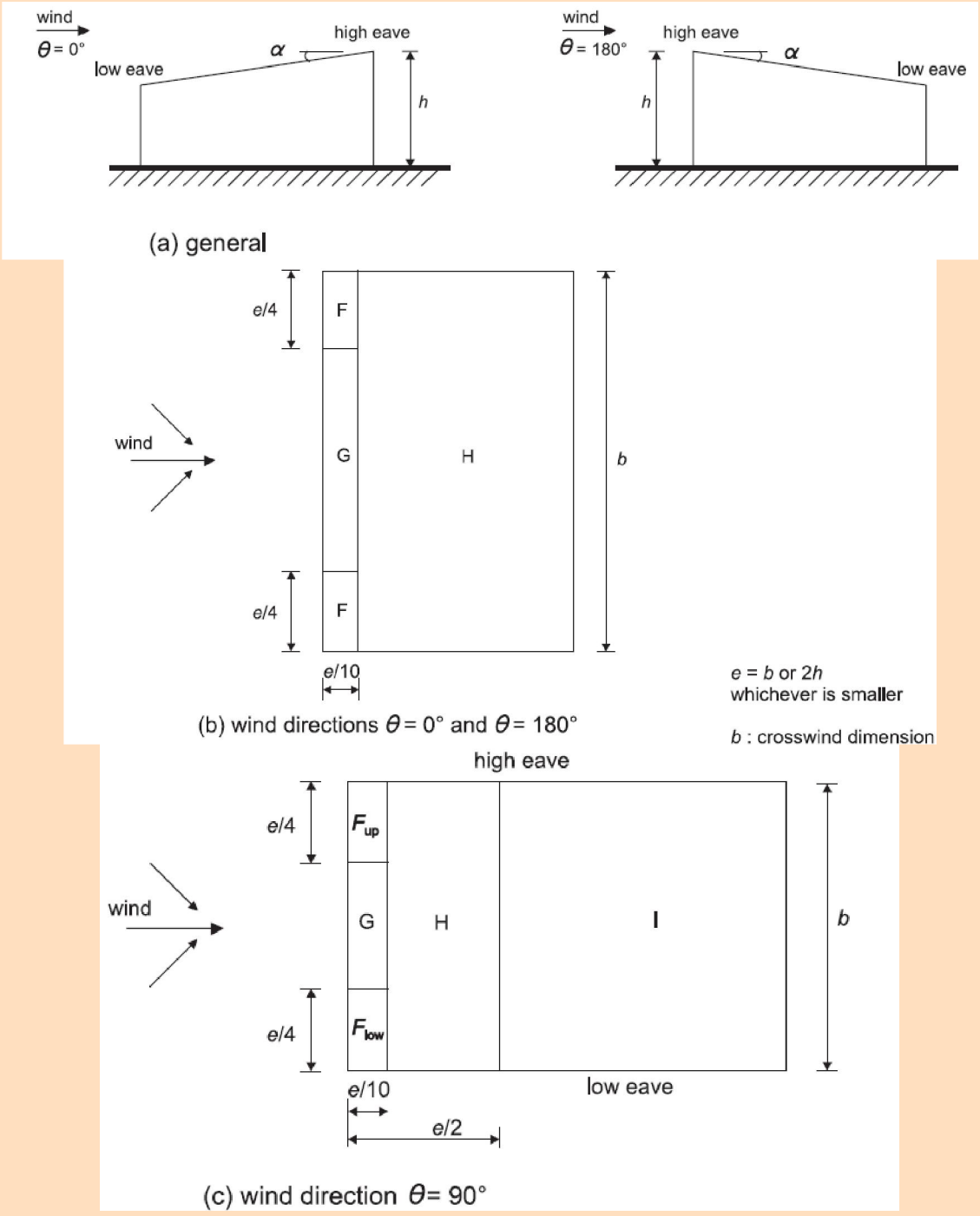

Figure 7.7 — Key for monopitch roofs

Table 7.3a-External pressure coefficients for monopitch roofs

Pitch Angle α	Zone for wind direction $\theta = 0^0$						Zone for wind direction $\theta = 0^0$					
	F		G		H		F		G		H	
	$c_{pe,10}$	$c_{pe,1}$	$c_{pe,10}$	$c_{pe,1}$	$c_{pe,10}$	$c_{pe,1}$	$c_{pe,10}$	$c_{pe,1}$	$c_{pe,10}$	$c_{pe,1}$	$c_{pe,10}$	$c_{pe,1}$
5^0	-1.7	-2.5	-1.2	-2.0	-0.6	-1.2	-2.3	-2.5	-1.3	-2.0	-0.8	-1.2
	+0.0		+0.0		+0.0							
15^0	-0.9	-2.0	-0.8	-1.5	-0.3		-2.5	-2.8	-1.3	-2.0	-0.9	-1.2
	+0.2		+0.2		+0.2							
30^0	-0.5	-1.5	-0.5	-1.5	-0.2		-1.1	-2.3	-0.8	-1.5	-0.8	
	+0.7		+0.7		+0.4							
45^0	-0.0		-0.0		-0.0		-0.6	-1.3	-0.5		-0.7	
	+0.7		+0.7		+0.6							
60^0	+0.7		+0.7		+0.7		-0.5	-1.0	-0.5		-0.5	
75^0	+0.8		+0.8		+0.8		-0.5	-1.0	-0.5		-0.5	

ONLY FOR REVIEW PURPOSE

Table 7.3a-External pressure coefficients for monopitch roofs

	Zone for wind direction θ= 90^0									
Pitch Angle α	**F_{up}**		**F_{low}**		**G**		**H**		**I**	
	$c_{pe,10}$	$c_{pe,1}$	$c_{pe,10}$	$c_{pe,1}$	$c_{pe,10}$	$c_{pe,1}$	$c_{pe,10}$	$c_{pe,1}$	$c_{pe,10}$	$c_{pe,1}$
5°	-2,1	-2,6	-2,1	-2,4	-1,8	-2,0	-0,6	-1,2	-0,5	
15°	-2,4	-2,9	-1,6	-2,4	-1,9	-2,5	-0,8	-1,2	-0,7	-1,2
30°	-2,1	-2,9	-1,3	-2,0	-1,5	-2,0	-1,0	-1,3	-0,8	-1,2
45°	-1,5	-2,4	-1,3	-2,0	-1,4	-2,0	-1,0	-1,3	-0,9	-1,2
60°	-1,2	-2,0	-1,2	-2,0	-1,2	-2,0	-1,0	-1,3	-0,7	-1,2
75°	-1,2	-2,0	-1,2	-2,0	-1,2	-2,0	-1,0	-1,3	-0,5	

NOTE 1 At θ□= 0° (see table a)) the pressure changes rapidly between positive and negative values around a pitch angle of α= +5° to +45°, so both positive and negative values are given. For those roofs, two cases should be considered: one with all positive values, and one with all negative values. No mixing of positive and negative values is allowed on the same face.

NOTE 2 Linear interpolation for intermediate pitch angles may be used between values of the same sign. The values equal to 0.0 are given for interpolation purposes

ONLY FOR REVIEW PURPOSE

7.2.5 **Duopitch roofs**

(1) The roof, including protruding parts, should be divided in zones as shown in Figure 7.8.

(2) The reference height z_e should be taken as h.

(3) The pressure coefficients for each zone that should be used are given in Table 7.4.

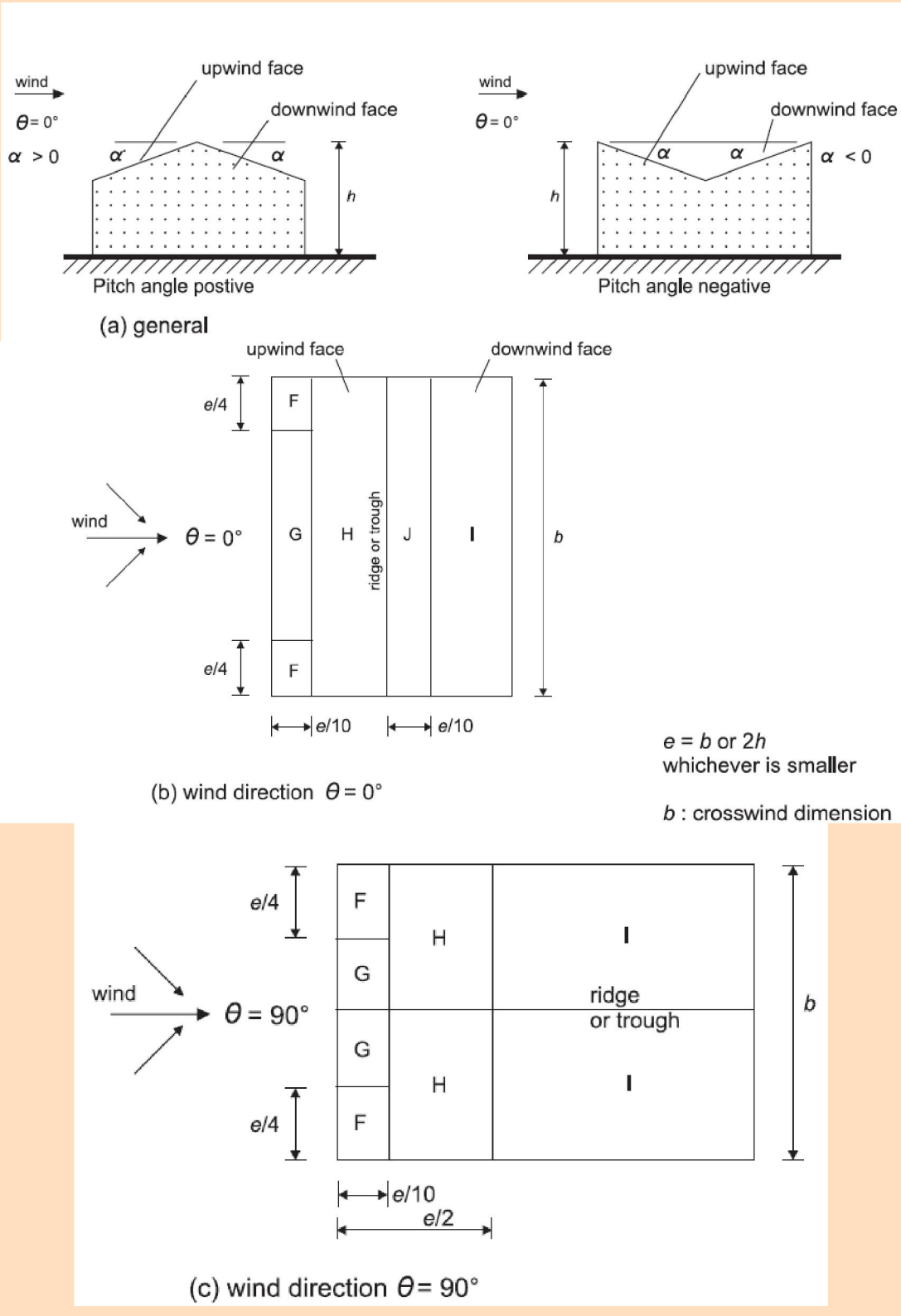

Figure 7.8 — Key for duopitch roofs

Table 7.4a — External pressure coefficients for duopitch roofs

Pitch Angle α	Zone for wind direction $\theta = 0^0$									
	F		G		H		I		J	
	$c_{pe,10}$	$c_{pe,1}$	$c_{pe,10}$	$c_{pe,1}$	$c_{pe,10}$	$c_{pe,1}$	$c_{pe,10}$	$c_{pe,1}$	$c_{pe,10}$	$c_{pe,1}$
-45°	-0.6		-0.6		-0.8		-0.7		-1.0	-1.5
-30°	-1.1	-2.0	-0.8	-1.5	-0.8		-0.6		-0.8	-1.4
-15°	-2.5	-2.8	-1.3	-2.0	-0.9	-1.2	-0.5		-0.7	-1.2
-5°	-2.3	-2.5	-1.2	-2.0	-0.8	-1.2	+0.2		+0.2	
							-0.6		-0.6	
5°	-1.7	-2.5	-1.2	-2.0	-0.6	-1.2	-0.6		+0.2	
	+0.0		+0.0		+0.0				-0.6	
15°	-0.9	-2.0	-0.8	-1.5	-0.3		-0.4		-1.0	-1.5
	+0.2		+0.2		+0,2		+0.0		+0.0	+0.0
30°	-0.5	-1.5	-0.5	-1.5	-0.2		-0.4		-0.5	
	+0.7		+0.7		+0.4		+0.0		+0.0	
45°	-0.0		-0.0		-0.0		-0.2		-0.3	
	+0.7		+0.7		+0.6		+0.0		+0.0	
60^0	+0.7		+0.7		+0.7		-0.2		-0.3	
75^0	+0.8		+0.8		+0.8		-0.2		-0.3	

NOTE 1 At θ = 0° the pressure changes rapidly between positive and negative values on the windward face around a pitch angle of α = -5° to +45°, so both positive and negative values are given. For those roofs, four cases should be considered where the largest or smallest values of all areas F, G and H are combined with the largest or smallest values in areas I and J. No mixing of positive and negative values is allowed on the same face.

NOTE 2 Linear interpolation for intermediate pitch angles of the same sign may be used between values of the same sign. (Do not interpolate between α = +5° and α = -5°, but use the data for flat roofs in 7.2.3). The values equal to 0,0 are given for interpolation purposes

ONLY FOR REVIEW PURPOSE

Table 7.4b — External pressure coefficients for duopitch roofs

Pitch Angle α	Zone for wind direction θ = 90°							
	F		G		H		I	
	$c_{pe,10}$	$c_{pe,1}$	$c_{pe,10}$	$c_{pe,1}$	$c_{pe,10}$	$c_{pe,1}$	$c_{pe,10}$	$c_{pe,1}$
-45°	-1,4	-2,0	-1,2	-2,0	-1,0	-1,3	-0,9	-1.2
-30°	-1,5	-2,1	-1,2	-2,0	-1,0	-1,3	-0,9	-1.2
-15°	-1,9	-2,5	-1,2	-2,0	-0,8	-1,2	-0.8	-1.2
-5°	-1,8	-2,5	-1,2	-2,0	-0,7	-1,2	-0,6	-1.2
5°	-1.6	-2.2	-1.3	-2.0	-0.7	-1.2	-0.6	
15°	-1.3	-2.0	-1.3	-2.0	-0.6	-1.2	-0.5	
30°	-1.1	-1.5	-1.4	-2,0	-0,8	1,2	-0.5	
45°	-1.1	-1.5	1.4	2,0	0.9	1.2	-0.5	
60°	-1.1	-1.5	-1.2	-2.0	-0.8	-1.0	-0.5	
75°	-1.1	-1.5	-1.2	-2.0	-0.8	-1.0	-0.5	

ONLY FOR REVIEW PURPOSE

7.2.6 **Hipped roofs**

(1) The roof, including protruding parts, should be divided into zones as shown in Figure 7.9.

(2) The reference height z_e should be taken as h.

(3) The pressure coefficients that should be used are given in Table 7.5.

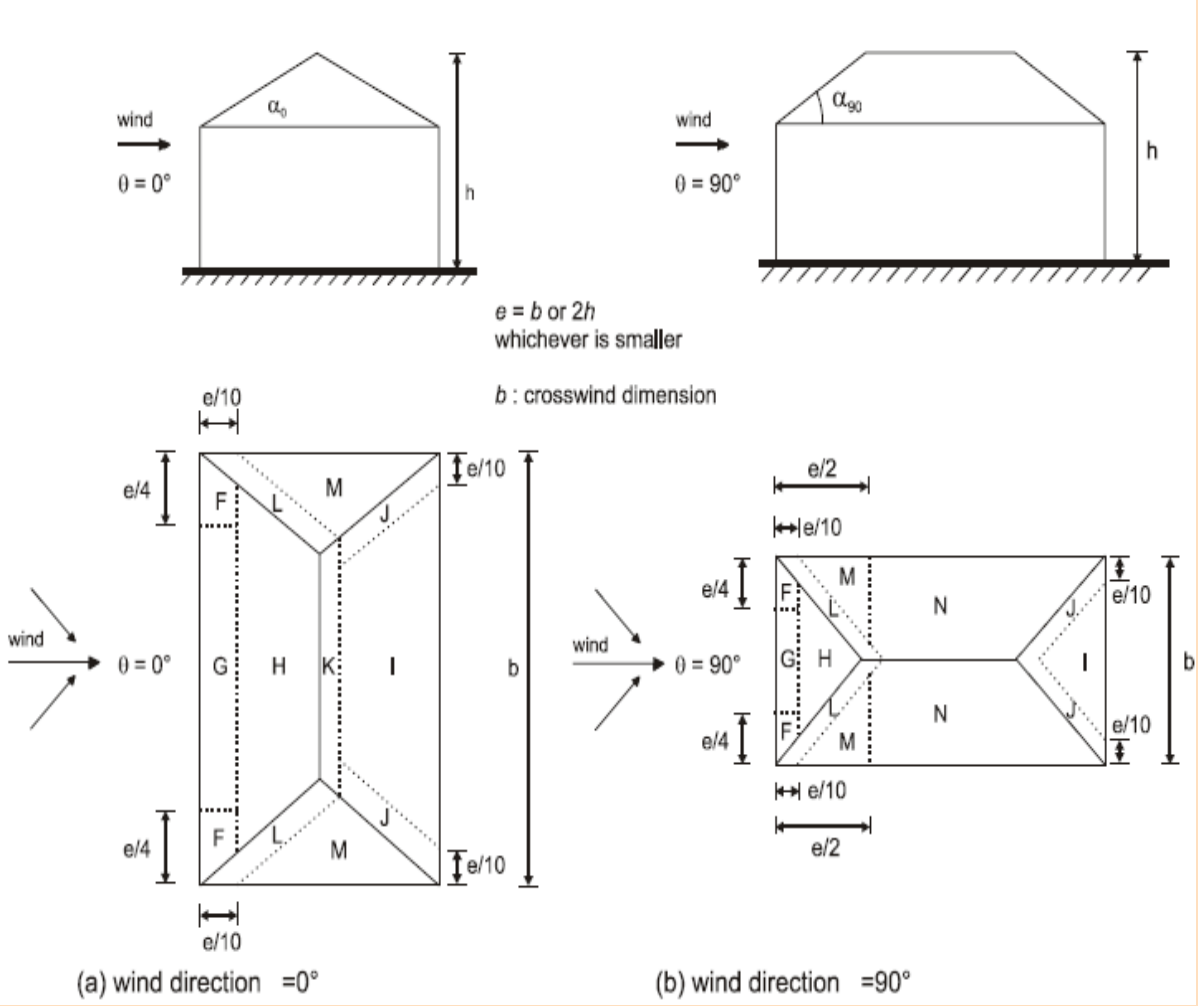

Figure 7.9 — Key for hipped roofs

Table 7.5 – External pressure coefficients for hipped roofs of buildings

Pitch angle for α_0 $\theta = 0^0$ α_{90} for $\theta=90^0$	Zone for wind direction $\Theta= 0^0$ and $\Theta =90^0$																	
	F		G		H		I		J		K		L		M		N	
	$c_{pe,10}$	$c_{pe,1}$	$c_{pe,10}$	$c_{pe,1}$	$c_{pe,10}$	$c_{pe,1}$	$c_{pe,10}$	$c_{pe,1}$	$c_{pe,10}$	$c_{pe,1}$	$c_{pe,10}$	$c_{pe,1}$	$c_{pe,10}$	$c_{pe,1}$	$c_{pe,10}$	$c_{pe,1}$	$c_{pe,10}$	$c_{pe,1}$
5^0	1.7	2.5	1.2	2.0	-0.6	-1.2	0.3		0.6		0.6		1.2	2.0	0.6	1.2	0.4	
	+0.0		+0.0		+0.0													
15^0	-0,9	-2,0	-0,8	-1,5	-0,3		-0.5		-1.0	-1.5	-1.2	-2.0	-1.4	-2.0	-0.6	-1.2	-0.3	
	+0.2		+0.2		+0.2													
30^0	0,5	1,5	0,5	1,5	-0.2		-0.4		-0.7	-1.2	-0.5		-1.4	-2.0	-0.8	-1.2	-0.2	
	+0.5		+0.7		+0.4													
45^0	-0.0		-0.0		-0.0		**-0.3**		**-0.6**		**-0.3**		**-1.3**	**-2.0**	**-0.8**	**-1.2**	**-0.2**	
	+0.7		+0.7		+0.7													
60^0	+0.7		+0.7		+0.7		**-0.3**		**-0.6**		**-0.3**		**1.2**	**2.0**		**-0.4**	**-0.2**	
75^0	+0.8		+0.8		+0.8		**-0.3**		**-0.6**		**0.3**	**1.2**	**2.0**	**0.4**	**0.2**	**0.3**	**0.6**	**0.3**

NOTE 1 At Θ□= 0□□the pressures changes rapidly between positive and negative values on the windward face at pitch angle of α□= +5□□to +45□, so both positive and negative values are given. For those roofs, two cases should be considered: one with all positive values, and one with all negative values. No mixing of positive and negative values are allowed.

NOTE 2 Linear interpolation for intermediate pitch angles of the same sign may be used between values of the same sign. The values equal to 0.0 are given for interpolation purposes.

NOTE 3 The pitch angle of the windward face always will govern the pressure coefficients.

ONLY FOR REVIEW PURPOSE

7.2.7 **Multispan roofs**

(1) Pressure coefficients for wind directions 0°, 90° and 180° for each span of a multispan roof may be derived from the pressure coefficient for each individual span.

Modifying factors for the pressures (local and global) for wind directions 0° and 180° on each span should be derived:

– from 7.2.4 for monopitch roofs, modified for their position according to Figure 7.10 a and b.

– from 7.2.5 for duopitch roofs for α < 0 modified for their position according to Figure 7.10 c and d.

(2) The zones F/G/J used should be considered only for the upwind face. The zones H and I should be considered for each span of the multispan roof.

(3) The reference height z_e should be taken as h

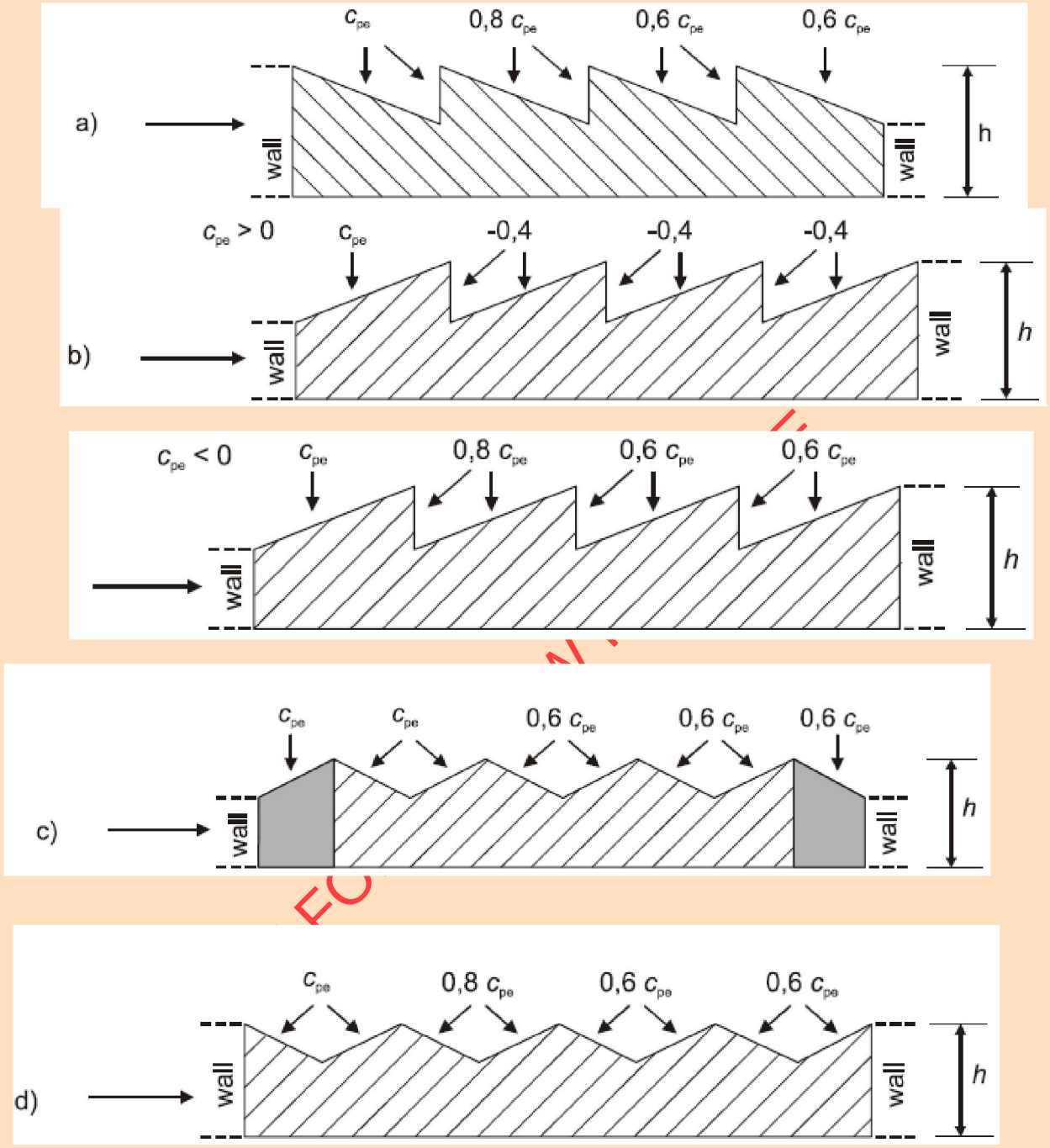

NOTE 1 In configuration b two cases should be considered depending on the sign of pressure coefficient c_{pe}on the first roof.

NOTE 2 In configuration c the first c_{pe} is the c_{pe} of the monopitch roof, the second and all following c_{pe} are the c_{pe} of the troughed duopitch roof.

Figure 7.10 — Key to multispan roofs

7.2.8 **Vaulted roofs and domes**

(1) This section applies to circular cylindrical roofs and domes.

Note: The values of $c_{pe,10}$ and $c_{pe,1}$ to be used for circular cylindrical roofs and domes may be given in the National Annex. The recommended values of $c_{pe,10}$ are given in Figures 7.11 and 7.12 for different zones. The reference height should be taken as $z_e = h + f$

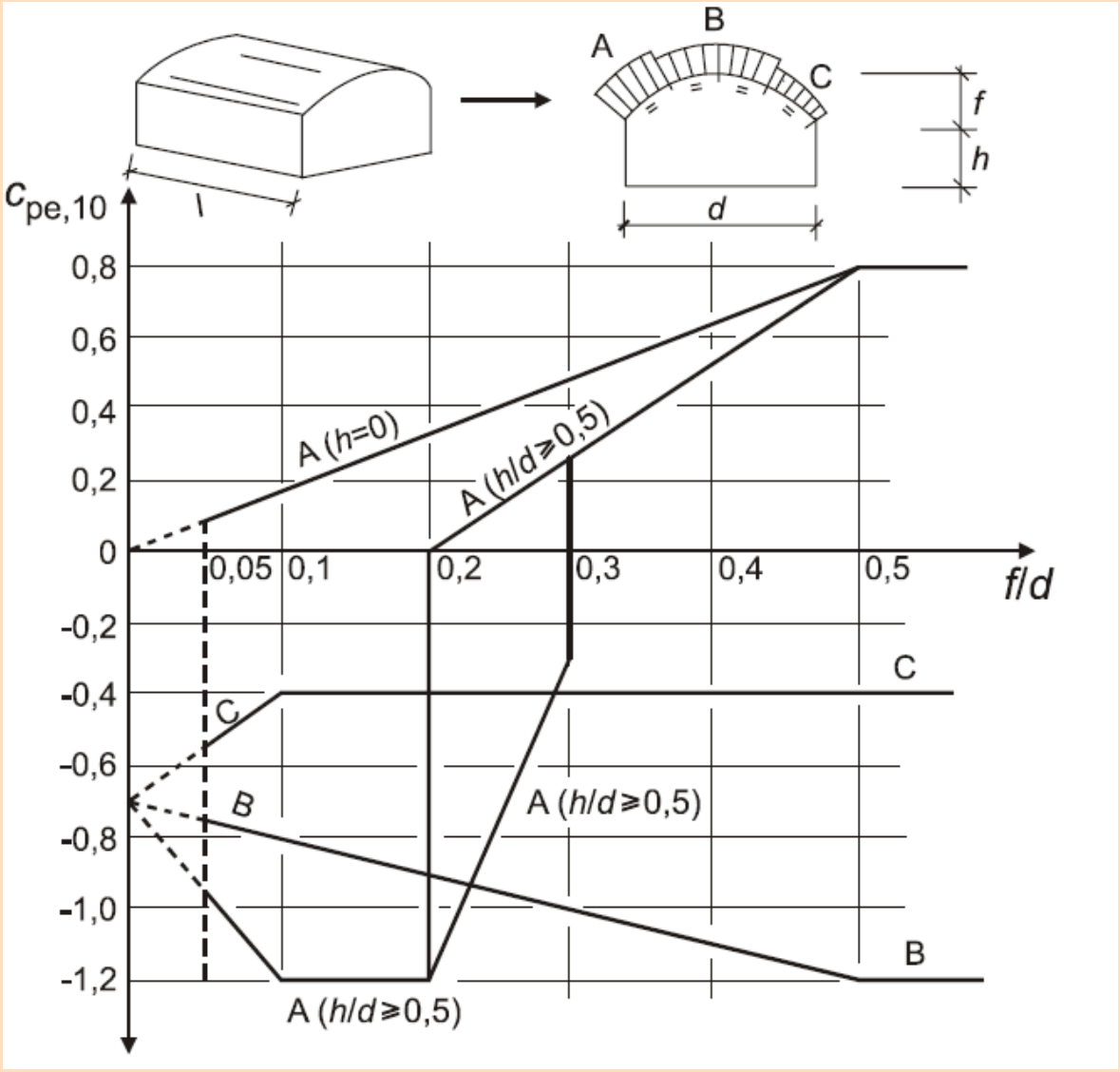

For Zone A:

- for $0 < h/d \leq 0.5$, the coefficient $c_{pe,10}$ is obtained by linear interpolation
- for $0.2 \leq f/d \leq 0.3$ and $h/d \geq 0.5$, two values of $c_{pe,10}$ have to be considered
- the diagram is not applicable for flat roofs

Figure 7.11 — Recommended values of external pressure coefficients $c_{pe,10}$ for vaulted roofs with rectangular base

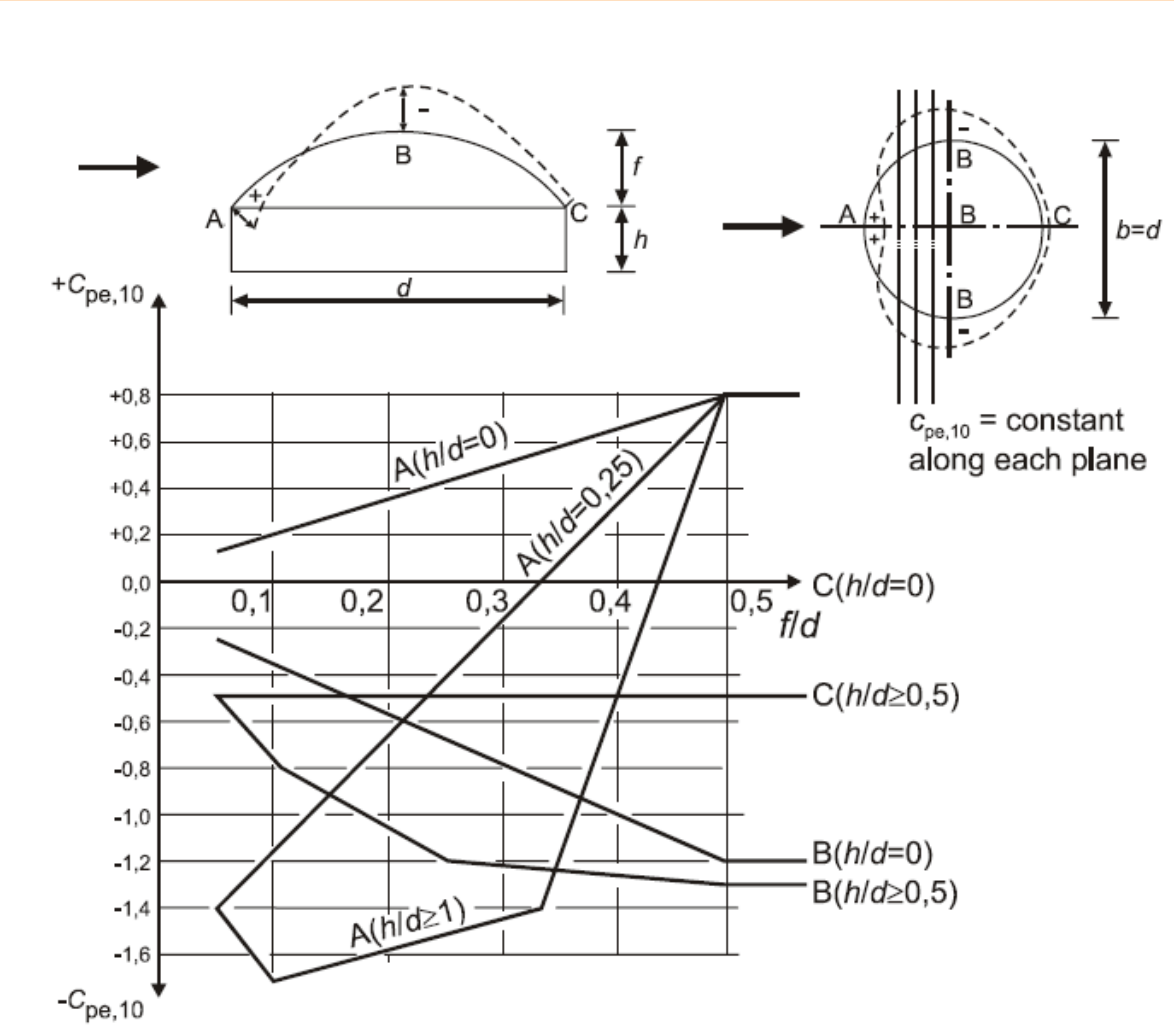

c_{pe},10 is constant along arcs of circles, intersections of the sphere and of planes perpendicular to the wind; it can be determined as a first approximation by linear interpolation between the values in A, B and C along the arcs of circles parallel to the wind. In the same way the values of c_{pe},10in A if 0 <*h/d*<1 and in B or C if 0 <*h/d*< 0.5 can be obtained by linear interpolation in the Figure above.

Figure 7.12 — Recommended values of external pressure coefficients $c_{pe,10}$ for domes with circular base

(2) Pressure coefficients for the walls of rectangular buildings with vaulted roofs should be taken from 7.2.2.

7.2.9 **Internal pressure**

(1)P Internal and external pressures shall be considered to act at the same time. The worst combination of external and internal pressures shall be considered for every combination of possible openings and other leakage paths.

(2) The internal pressure coefficient, c_{pi}, depends on the size and distribution of the openings in the building envelope. When in at least two sides of the buildings (facades or roof) the total area of openings in each side is more than 30 % of the area of that side, the actions on the structure should not be calculated from the rules given in this section but the rules of 7.3 and 7.4 should instead be used.

NOTE The openings of a building include small openings such as: open windows, ventilators, chimneys, etc. as well as background permeability such as air leakage around doors, windows, services and through the building envelope. The background permeability is typically in the range 0.01% to 0, 1% of the face area. Additional information may be given in a National Annex.

(3) Where an external opening, such as a door or a window, would be dominant when open but is considered to be closed in the ultimate limit state, during severe windstorms, the condition with the door or window open should be considered as an accidental design situation in accordance with EBCS EN 1990.

NOTE Checking of the accidental design situation is important for tall internal walls (with high risk of hazard) when the wall has to carry the full external wind action because of openings in the building envelope.

(4) A face of a building should be regarded as dominant when the area of openings at that face is at least twice the area of openings and leakages in the remaining faces of the building considered.

NOTE This can also be applied to individual internal volumes within the building.

(5) For a building with a dominant face the internal pressure should be taken as a fraction of the external pressure at the openings of the dominant face. The values given by Expressions (7.2) and (7.3) should be used.

When the area of the openings at the dominant face is twice the area of the openings in the remaining faces,

$$c_{pi} = 0.75 \cdot c_{pe} \qquad (7.2)$$

When the area of the openings at the dominant face is at least 3 times the area of the openings in the remaining faces,

$$c_{pi} = 0.90 \cdot c_{pe} \qquad (7.3)$$

where

c_{pe} is the value for the external pressure coefficient at the openings in the dominant face. When these openings are located in zones with different values of external pressures an area weighted average value of c_{pe} should be used.

When the area of the openings at the dominant face is between 2 and 3 times the area of the openings in the remaining faces linear interpolation for calculating c_{pi} may be used.

ONLY FOR REVIEW PURPOSE

(6) For buildings without a dominant face, the internal pressure coefficient c_{pi} should be determined from Figure 7.13, and is a function of the ratio of the height and the depth of the building, h/d, and the opening ratio μ for each wind direction θ, which should be determined from Expression (7.4).

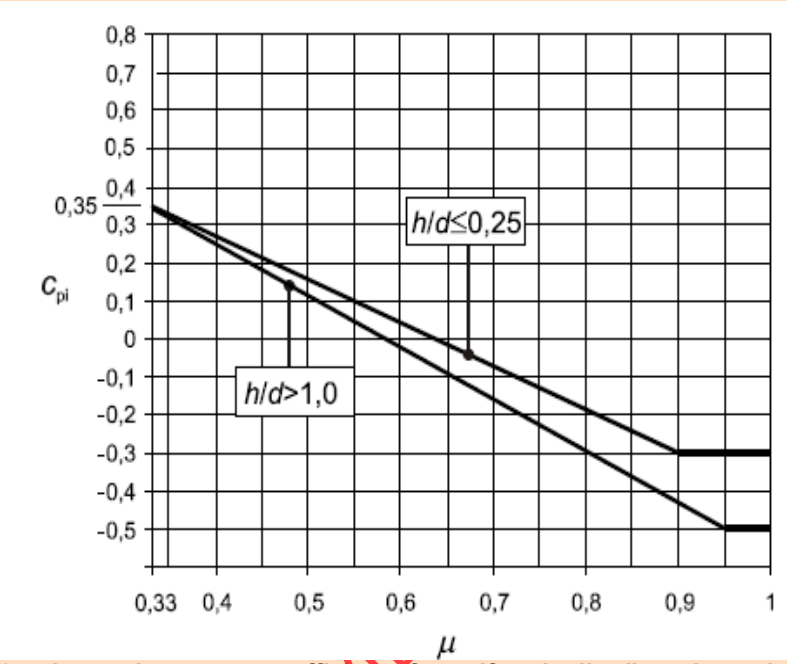

7.13 — Internal pressure coefficients for uniformly distributed openings

$$\mu = \frac{\sum \text{area of openings where } c_{pe} \text{ is negative or - 0.0}}{\sum \text{area of all openings}} \qquad (7.4)$$

NOTE 1 This applies to façades and roof of buildings with and without internal partitions.

NOTE 2 Where it is not possible, or not considered justified, to estimate μ for a particular case then c_{pi} should be taken as the more onerous of +0,2 and -0,3.

(7) The reference height z_i for the internal pressures should be equal to the reference height z_e for the external pressures (see 5.1) on the faces which contribute by their openings to the creation of the internal pressure. If there are several openings the largest value of z_e should be used to determine z_i.

(8) The internal pressure coefficient of open silos and chimneys should be based on Expression (7.5):

$$c_{pe} = -0.60 \qquad (7.5)$$

The internal pressure coefficient of vented tanks with small openings should be based on Expression (7.6):

ONLY FOR REVIEW

c_{pe} = -0.40 (7.6)

The reference height Z_i is equal to the height of the structure.

7.2.10 **Pressure on walls or roofs with more than one skin**

(1) The wind force is to be calculated separately on each skin.

(2) The permeability μ of a skin is defined as the ratio of the total area of the opening to the total area of the skin. A skin is defined as impermeable if the value μ is less than 0.1%.

(3) If only one skin is permeable, then the wind force on the impermeable skin should be determined from the difference between the internal and the external wind pressure as described in Section 5.1. If more than one skin is permeable then the wind force on each skin depends on:

- The relative rigidity of the skins,
- The external and internal pressures,
- The distance between the skins,
- The permeability of the skins,
- The openings at the extremities of the layer between the skins.

NOTE 1 The National Annex may give values for the wind effects on external walls and roofs with more than one skin. As a first approximation it is recommended that the wind pressure on the most rigid skin may be taken as the difference between the internal and the external pressures.

NOTE 2 The National Annex may give rules for cases where the extremities of the layer between the skins are air tight (Figure 7.14(a)) and where the free distance between the skins is less than 100 mm (the thermal insulation material being included in one skin, when there is no airflow within the insulation). As a first approximation the following recommended rules may be applied:

- For walls and roofs with an impermeable inside skin and a permeable outside skin with approximately uniformly distributed openings, the wind force on the outside skin may be calculated from $c_{p,net}$ = 2/3 · c_{pe} for overpressure and $c_{p,net}$ = 1/3 · c_{pe} for under pressure. The wind force on the inside skin may be calculated from $c_{p,net}$ = c_{pe}- c_{pi}.
- For walls and roofs with an impermeable inside skin and an impermeable more rigid, outside skin, the wind force on the outside skin may be calculated from $c_{p,net}$=c_{pe}- c_{pi}.
- For walls and roofs with a permeable inside skin with approximately uniformly distributed openings and an impermeable outside skin, the wind force on the outside skin may be calculated from $c_{p,net}$= c_{pe}- c_{pi}, and the wind force on the inside skin from $c_{p,net}$= 1/3 ·c_{pi}.
- For walls and roofs with an impermeable outside skin and an impermeable, more rigid inside skin, the wind force on the outside skin may be calculated from $c_{p,net}$ = c_{pe} and the wind force on the inside skin from $c_{p,net}$= c_{pe}- c_{pi}.

If entries of air put the layer of air into communication with faces of the building other than the face on which the wall is situated (Figure 7.14(b)), these rules are not applicable

ONLY FOR REVIEW PURPOSE

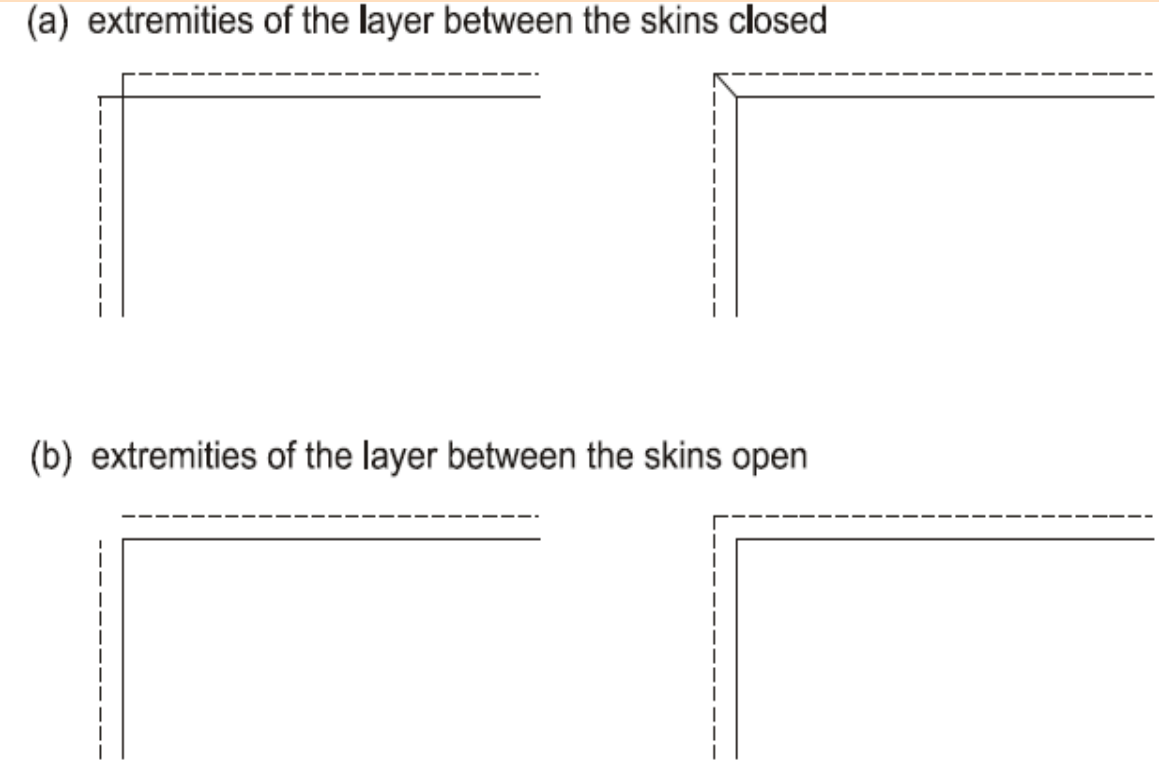

Figure 7.14 — Corner details for external walls with more than one skin.

ONLY FOR REVIEW

7.3 Canopy roofs

(1) A canopy roof is defined as the roof of a structure that does not have permanent walls, such as petrol stations, dutch barns, etc.

(2) The degree of blockage under a canopy roof is shown in Figure 7.15. It depends on the blockage φ, which is the ratio of the area of feasible, actual obstructions under the canopy divided by the cross sectional area under the canopy, both areas being normal to the wind direction. $\varphi = 0$ represents an empty canopy, and $\varphi = 1$ represents the canopy fully blocked with contents to the down wind eaves only (this is not a closed building).

(3) The overall force coefficients, c_f, and net pressure coefficients $c_{p,net}$, given in Tables 7.6 to 7.8 for $\varphi = 0$ and $\varphi = 1$ take account of the combined effect of wind acting on both the upper and lower surfaces of the canopies for all wind directions. Intermediate values may be found by linear interpolation.

(4) Downwind of the position of maximum blockage, $c_{p,net}$ values for $\varphi = 0$ should be used.

(5) The overall force coefficient represents the resulting force. The net pressure coefficient represents the maximum local pressure for all wind directions. It should be used in the design of roofing elements and fixings.

(6) Each canopy must be able to support the load cases as defined below:

– for a monopitch canopy (Table 7.6) the center of pressure should be taken at d/4 from the windward edge (d = along wind dimension, Figure 7.16)

– for a duopitch canopy (Table 7.7) the center of pressure should be taken at the center of each slope (Figure 7.17). In addition, a duopitch canopy should be able to support one pitch with the maximum or minimum load, the other pitch being unloaded.

– for a multibay duopitch canopy each load on a bay may be calculated by applying the reduction factors ψ_{mc} given in Table 7.8 to the $c_{p,net}$ values given in Table 7.7.

For canopies with double skins, the rules in 7.2.10 (4) should be used.

(7) Friction forces should be considered (see 7.5).

(8) The reference height z_e should be taken as h as shown in Figures 7.16 and 7.17.

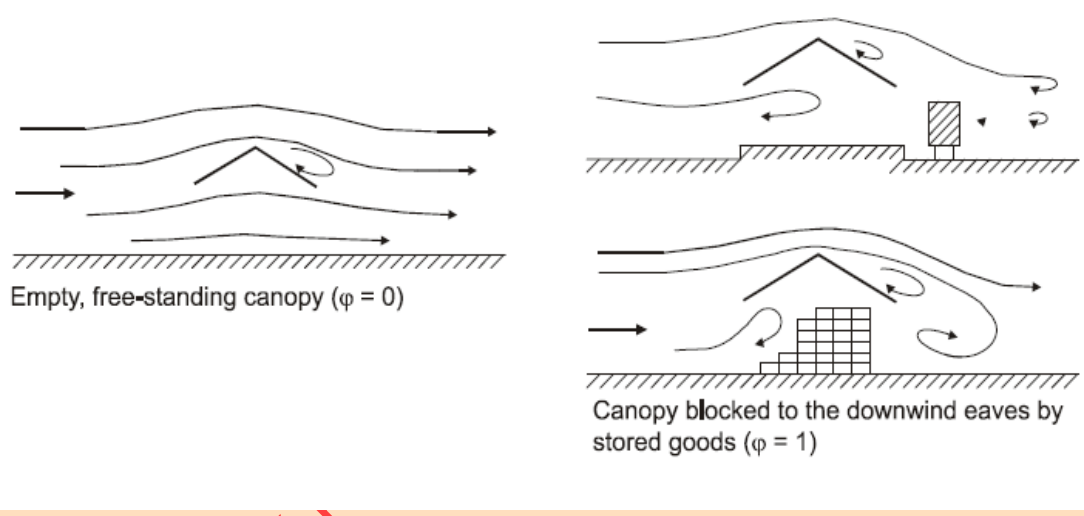

Figure 7.15 — Airflow over canopy roofs

ONLY

Table 7.6 — $c_{p,net}$ and c_f values for monopitch canopies

			Net Pressure coefficients $c_{p,net}$ Key plan 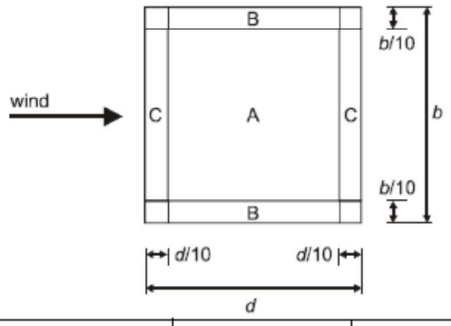 		
Roof angle α	**Blockage φ**	**Overall Force *Coefficients* c_f**	**Zone A**	**Zone B**	**Zone C**
0°	Maximum all φ	+ 0,2	+ 0,5	+ 1,8	+ 1,1
	Minimum $\varphi = 0$	- 0,5	- 0,6	- 1,3	- 1,4
	Minimum $\varphi = 1$	- 1,3	- 1,5	- 1,8	- 2,2
5°	Maximum all φ	+ 0,4	+ 0,8	+ 2,1	+ 1,3
	Minimum $\varphi = 0$	- 0,7	- 1,1	- 1,7	- 1,8
	Minimum $\varphi = 1$	- 1,4	- 1,6	- 2,2	- 2,5
10°	Maximum all φ	+ 0,5	+ 1,2	+ 2,4	+ 1,6
	Minimum $\varphi = 0$	- 0,9	- 1,5	- 2,0	- 2,1
	Minimum $\varphi = 1$	- 1,4	- 2,1	- 2,6	- 2,7
15°	Maximum all φ	+ 0,7	+ 1,4	+ 2,7	+ 1,8
	Minimum $\varphi = 0$	- 1,1	- 1,8	- 2,4	- 2,5
	Minimum $\varphi = 1$	- 1,4	- 1,6	- 2,9	- 3,0
20°	Maximum all φ	+ 0,8	+ 1,7	+ 2,9	+ 2,1
	Minimum $\varphi = 0$	- 1,3	- 2,2	- 2,8	- 2,9
	Minimum $\varphi = 1$	- 1,4	- 1,6	- 2,9	- 3,0
25°	Maximum all φ	+ 1,0	+ 2,0	+ 3,1	+ 2,3
	Minimum $\varphi = 0$	- 1,6	- 2,6	- 3,2	- 3,2
	Minimum $\varphi = 1$	- 1,4	- 1,5	- 2,5	- 2,8
30°	Maximum all φ	+ 1,2	+ 2,2	+ 3,2	+ 2,4
	Minimum $\varphi = 0$	- 1,8	- 3,0	- 3,8	- 3,6
	Minimum $\varphi = 1$	- 1,4	- 1,5	- 2,2	- 2,7
NOTE	+ values indicate a net downward acting wind action - values represent a net upward acting wind action				

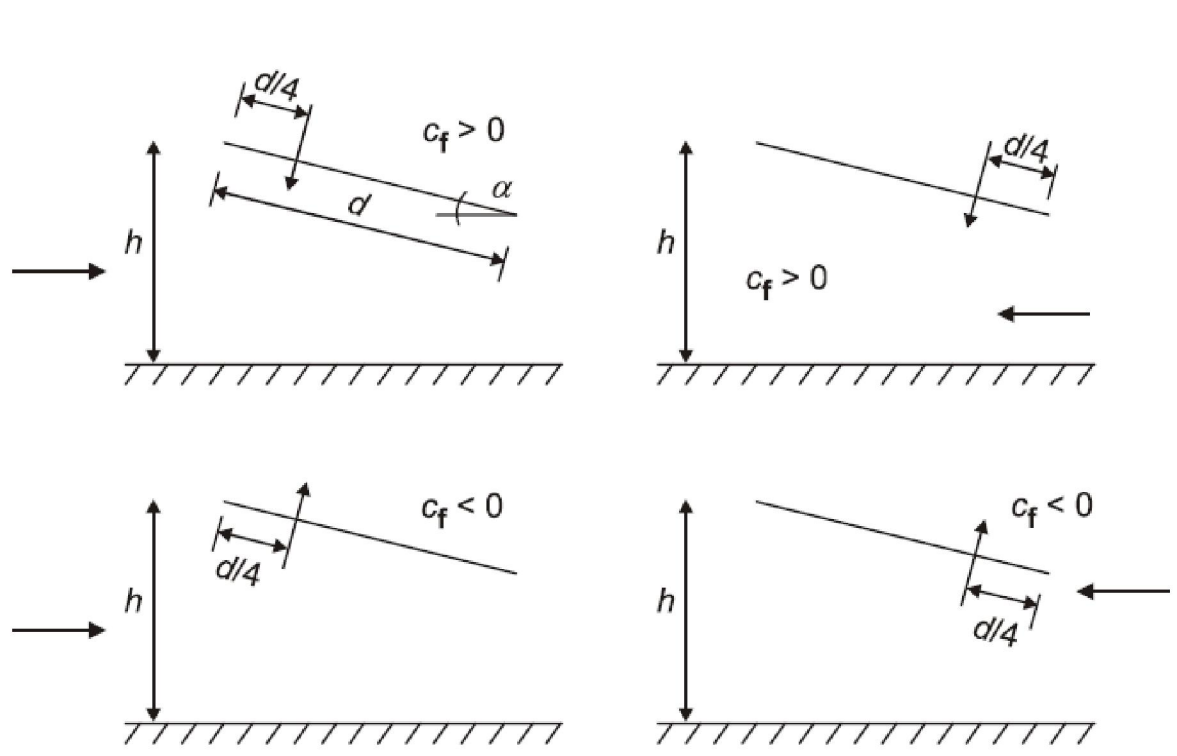

Figure 7.16 — Location of the centre of force for monopitch canopies

ONLY FOR REVIEW

Roof angle α [°]	Blockage φ	Overall Force Coefficient c_f	Net pressure coefficients $c_{p,net}$ Zone A	Zone B	Zone C	Zone D
			Key plan 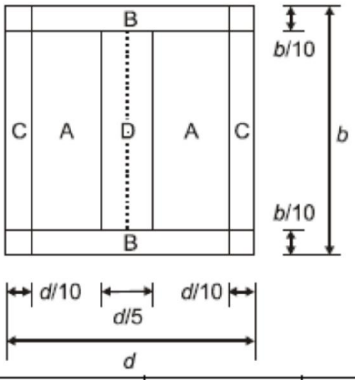			
- 20	Maximum all φ	+ 0,7	+ 0,8	+ 1,6	+ 0,6	+ 1,7
	Minimum $\varphi = 0$	- 0,7	- 0,9	- 1,3	- 1,6	- 0,6
	Minimum $\varphi = 1$	- 1,3	- 1,5	- 2,4	- 2,4	- 0,6
- 15	Maximum all φ	+ 0,5	+ 0,6	+ 1,5	+ 0,7	+ 1,4
	Minimum $\varphi = 0$	- 0,6	- 0,8	- 1,3	- 1,6	- 0,6
	Minimum $\varphi = 1$	- 1,4	- 1,6	- 2,7	- 2,6	- 0,6
- 10	Maximum all φ	+ 0,4	+ 0,6	+ 1,4	+ 0,8	+ 1,1
	Minimum $\varphi = 0$	- 0,6	- 0,8	- 1,3	- 1,5	- 0,6
	Minimum $\varphi = 1$	- 1,4	- 1,6	- 2,7	- 2,6	- 0,6
- 5	Maximum all φ	+ 0,3	+ 0,5	+ 1,5	+ 0,8	+ 0,8
	Minimum $\varphi = 0$	- 0,5	- 0,7	- 1,3	- 1,6	- 0,6
	Minimum $\varphi = 1$	- 1,3	- 1,5	- 2,4	- 2,4	- 0,6
+ 5	Maximum all φ	+ 0,3	+ 0,6	+ 1,8	+ 1,3	+ 0,4
	Minimum $\varphi = 0$	- 0,6	- 0,6	- 1,4	- 1,4	- 1,1
	Minimum $\varphi = 1$	- 1,3	- 1,3	- 2,0	- 1,8	- 1,5
+ 10	Maximum all φ	+ 0,4	+ 0,7	+ 1,8	+ 1,4	+ 0,4
	Minimum $\varphi = 0$	- 0,7	- 0,7	- 1,5	- 1,4	- 1,4
	Minimum $\varphi = 1$	- 1,3	- 1,3	- 2,0	- 1,8	- 1,8
+ 15	Maximum all φ	+ 0,4	+ 0,9	+ 1,9	+ 1,4	+ 0,4
	Minimum $\varphi = 0$	- 0,8	- 0,9	- 1,7	- 1,4	- 1,8
	Minimum $\varphi = 1$	- 1,3	- 1,3	- 2,2	- 1,6	- 2,1
+ 20	Maximum all φ	+ 0,6	+ 1,1	+ 1,9	+ 1,5	+ 0,4
	Minimum $\varphi = 0$	- 0,9	- 1,2	- 1,8	- 1,4	- 2,0
	Minimum $\varphi = 1$	- 1,3	- 1,4	- 2,2	- 1,6	- 2,1

Net pressure coefficients $c_{p,net}$

Key plan

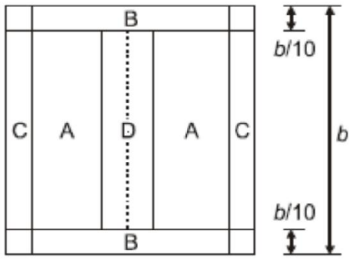

Roof angle α [°]	Blockage φ	Overall Force Coefficient c_f	Zone A	Zone B	Zone C	Zone D
+ 25	Maximum all φ	+ 0,7	+ 1,2	+ 1,9	+ 1,6	+ 0,5
	Minimum $\varphi = 0$	- 1,0	- 1,4	- 1,9	- 1,4	- 2,0
	Minimum $\varphi = 1$	- 1,3	- 1,4	- 2,0	- 1,5	- 2,0
+ 30	Maximum all φ	+ 0,9	+ 1,3	+ 1,9	+ 1,6	+ 0,7
	Minimum $\varphi = 0$	- 1,0	- 1,4	- 1,9	- 1,4	- 2,0
	Minimum $\varphi = 1$	- 1,3	- 1,4	- 1,8	- 1,4	- 2,0

NOTE + values indicate a net downward acting wind action

- values represent a net upward acting wind action

ONLY FOR

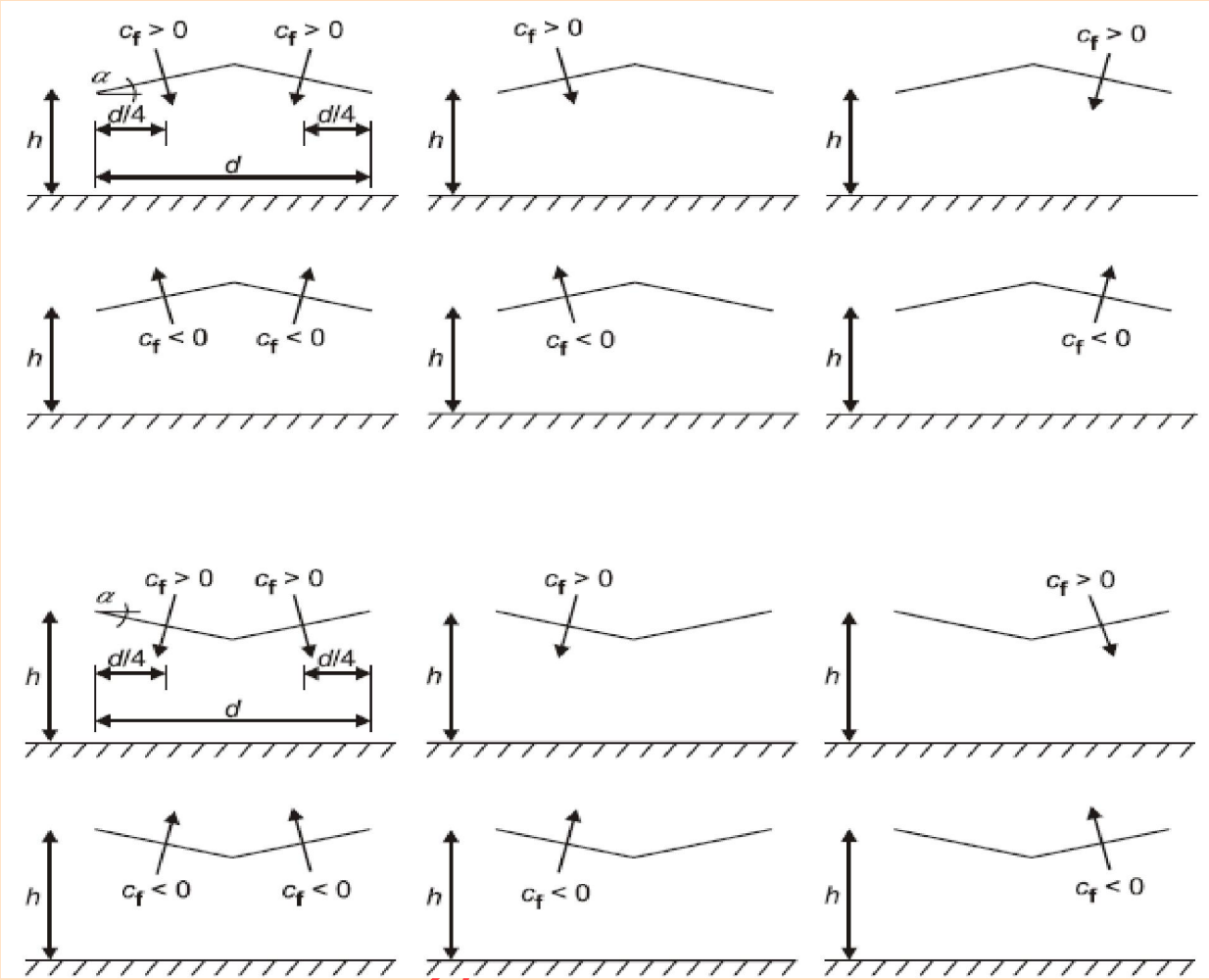

Figure 7.17 — Arrangements of loads obtained from force coefficients for duopitch canopies

(9) Loads on each slope of multibay canopies, as shown in Figure 7.18, are determined by applying the reduction factors ψ_{mc} given in Table 7.8 to the overall force, and net pressure coefficients for isolated duo-pitch canopies.

ONLY FOR

Table 7.8 — Reduction factors ψ_{mc} for multibay canopies

Bay	Location	ψ_{mc} factors for all φ	
		on maximum (downward) force and pressure coefficients	on minimum (upward) force and pressure coefficients
1	End bay	1,0	0,8
2	second bay	0,9	0,7
3	third and subsequent bays	0,7	0,7

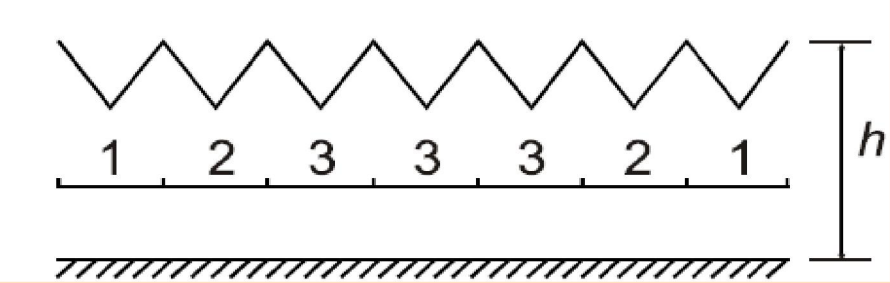

Figure 7.18 — Multibay canopies

7.4 Free-standing walls, parapets, fences and signboards

(1) The values of the resulting pressure coefficients cp,netfor free-standing walls and parapets depend on the solidity ratio ϕ. For solid walls the solidity ϕ should be taken as 1, and for walls which are 80 % solid (i.e. have 20 % openings) ϕ = 0,8. Porous walls and fences with a solidity ratio ϕ≤ 0,8 should be treated as plane lattices in accordance with 7.11.

NOTE For parapets and noise barriers of bridges see Section 8.

7.4.1 Free-standing walls and parapets

(1) For free-standing walls and parapets resulting pressure coefficients cp,net should be specified for the zones A, B, C and D as shown in Figure 7.19.

NOTE Values of the resulting pressure coefficients cp,net for free-standing walls and parapets may be given in the National Annex. Recommended values are given in Table 7.9 for two different solidity ratio, see 7.4 (1). The reference area in both cases is the gross area. Linear interpolation may be used for solidity ratio between 0,8 and 1.

Table 7.9 — Recommended pressure coefficients $c_{p,net}$ for free-standing walls and parapets

Solidity	Zone		A	B	C	D
$\varphi = 1$	Without return corners	$\ell/h \le 3$	2,3	1,4	1,2	1,2
		$\ell/h = 5$	2,9	1,8	1,4	1,2
		$\ell/h \ge 10$	3,4	2,1	1,7	1,2
	with return corners of length $\ge h$ [a, b]		±2,1	±1,8	±1,4	±1,2
$\varphi = 0,8$			±1,2	±1,2	±1,2	±1,2

[a] Linear interpolation may be used for return corner lengths between 0,0 and h

[b] Mixing of positive and negative values is not allowed.

Y FOR REVIEW PURPOSE

(2) The reference height for free standing walls should be taken as z_e = h, see Figure 7.19. The reference height for parapets in buildings should be taken as z_e= (h + h_p), see Figure 7.6

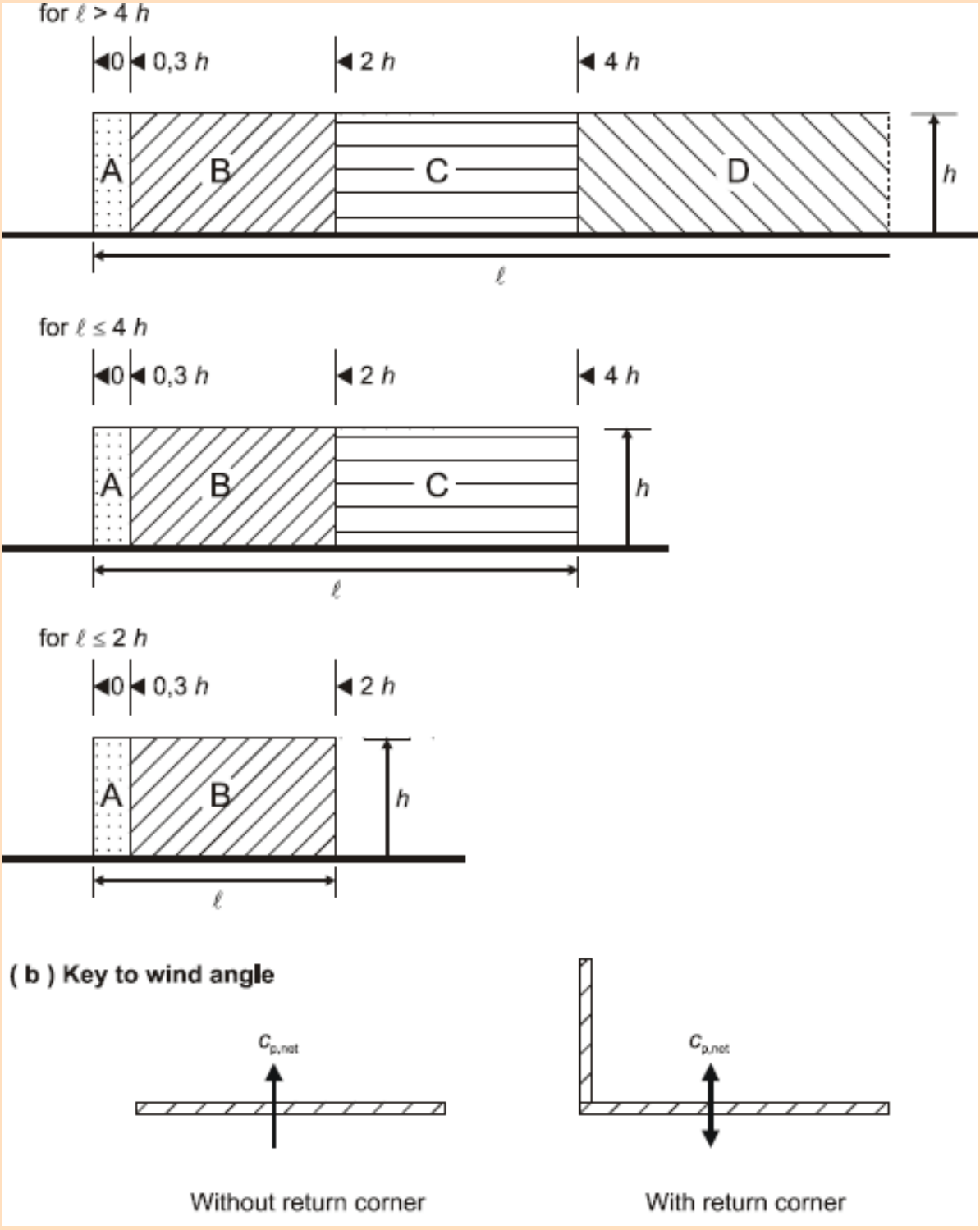

Figure 7.19 — Key to zones of free-standing walls and parapets

7.4.2 Shelter factors for walls and fences

(1) If there are other walls or fences upwind that are equal in height or taller than the wall or fence of height, h, under consideration, then an additional shelter factor can be used with the net pressure coefficients for walls and lattice fences. The value of the shelter factor ψ_s depends on the spacing between the walls or fences x, and the solidity ϕ, of the upwind (sheltering) wall or fence. Values of $\psi_s$are given in Figure 7.20.

The resulting net pressure coefficient on the sheltered wall, $c_{p,net,s}$, is given by Expression (7.7):

$$C_{pnet,s}=\Psi_s.c_{p.net}$$

(2) The shelter factor should not be applied in the end zones within a distance of h measured from the free end of the wall.

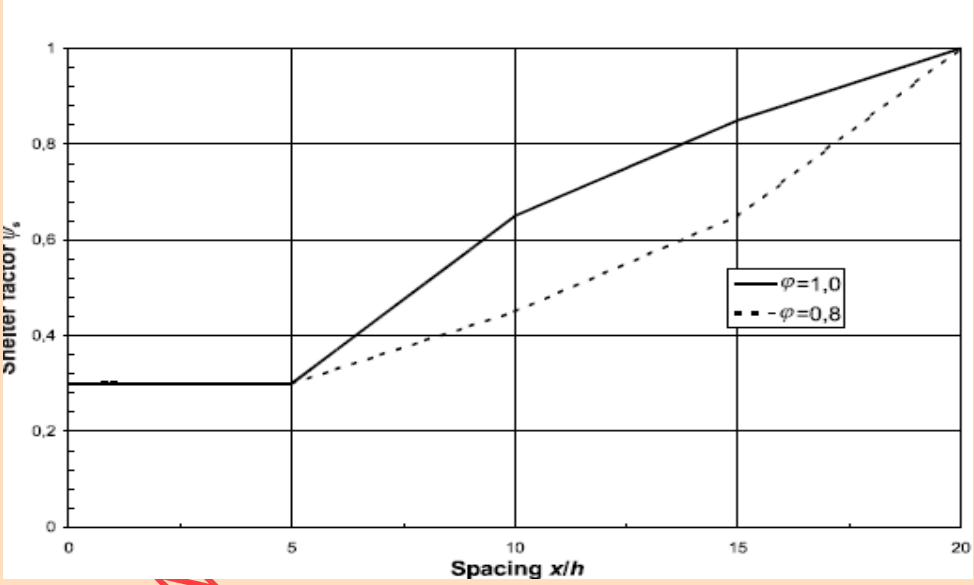

Figure 7.20 — Shelter factor $\psi_s$for walls and fences for φ-values between 0,8 and 1,0

7.4.3 Signboards

(1) For signboards separated from the ground by a height z_g greater than $h/4$ (see Figure 7.21), the force coefficients are given by Expression (7.8):

$$C_f = 1.80 \qquad (7.8)$$

(2) Signboards separated from the ground by a height z_g less than $h/4$ and with $b/h > 1$ should be treated as boundary walls, (see 7.4.1). When $z_g$is less than $h/4$ and $b/h \leq 1$ Expression (7.8) is applicable.

(3) The resultant force normal to the signboard should be taken to act at the height of

the center of the signboard, with an horizontal eccentricity e given by Expression (7.9):

$$e = \pm 0.25 \cdot b \qquad (7.9)$$

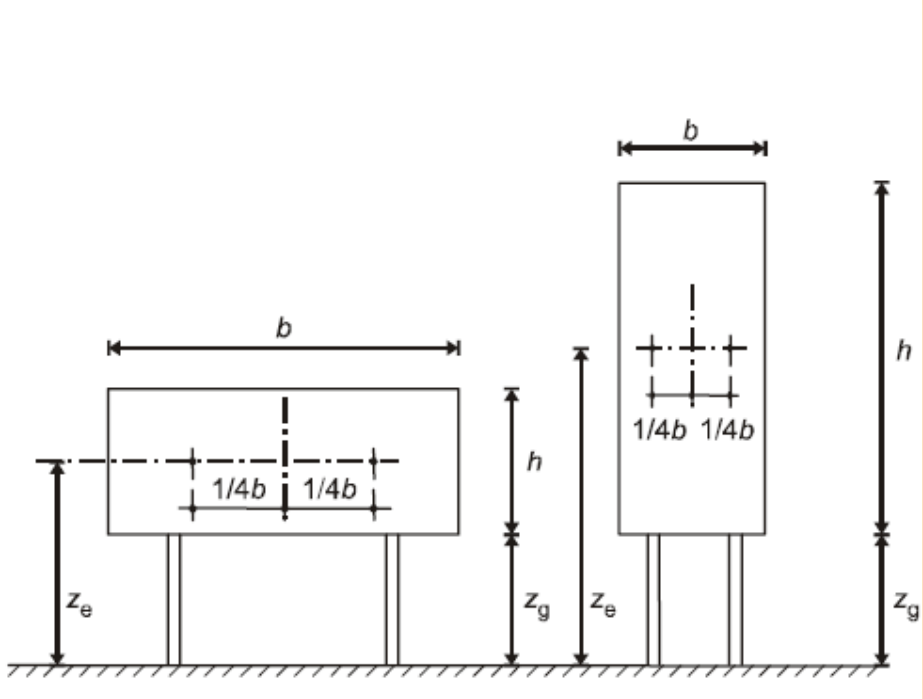

NOTE 1 reference height: ze = zg + h/2

NOTE 2 reference area: Aref= b ·h

Figure 7.21 — Key for signboards

Divergence or stall flutter instabilities should be checked.

7.5 Friction coefficients

(1) Friction should be considered for the cases defined in 5.3 (3).

(2) The friction coefficients cfr, for walls and roof surfaces given in Table 7.10, should be used

(3) The reference area *A*fr is given in Figure 7.22. Friction forces should be applied on the part of the external surfaces parallel to the wind, located beyond a distance from the upwind eaves or corners, equal to the smallest value of 2·b or 4·h.

(4) The reference height z_e should be taken equal to the structure height above ground or building height h, see Figure 7.22

ONLY FOR R

Table 7.10 — Frictional coefficients c_{fr} for walls, parapets and roof surfaces

Surface	Friction coefficient c_{fr}
Smooth (i.e. steel, smooth concrete)	0,01
Rough (i.e. rough concrete, tar-boards)	0,02
very rough (i.e. ripples, ribs, folds)	0,04

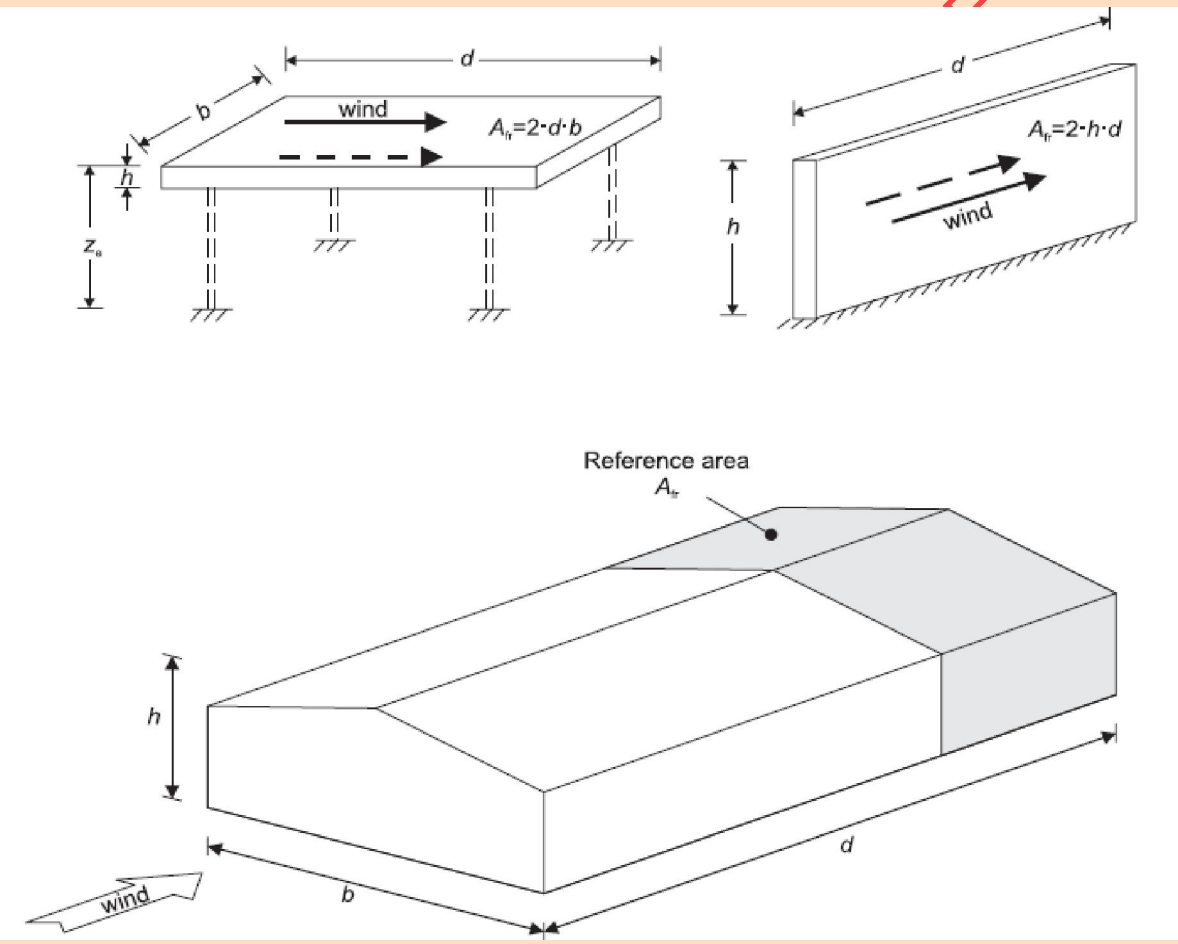

Figure 7.22 — Reference area for friction

7.6 Structural elements with rectangular sections

(1) The force coefficient c_f of structural elements of rectangular section with the wind blowing normally to a face should be determined by Expression (7.10):

$$c_r = c_{f,0}.\psi_r.\psi_\lambda \quad (7.10)$$

where:

$c_{f,0}$ is the force coefficient of rectangular sections with sharp corners and without free-end flow as given by Figure 7.23

ψ_r is the reduction factor for square sections with rounded corners. ψ_r depends on Reynolds number, see Note 1.

ψ_λ is the end-effect factor for element with free-end flow as defined in 7.13.

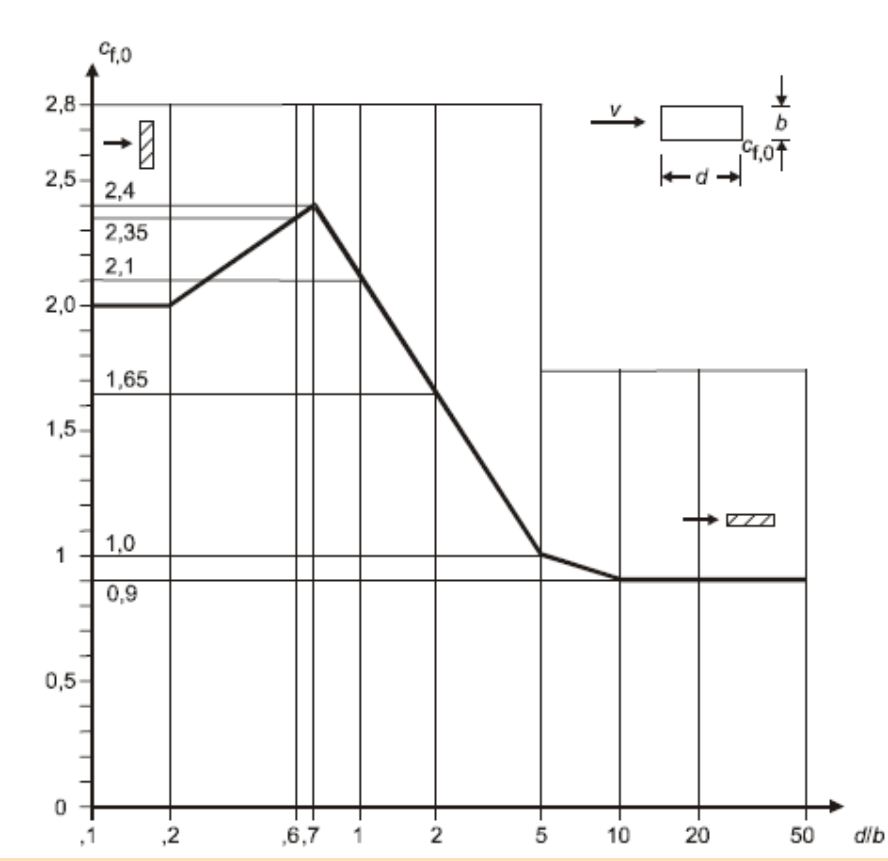

Figure 7.23 –Force coefficients cf,0 of rectangular sections with sharp corners and without free end flow

NOTE 1 The values of ψ_r may be given in the National Annex. Recommended approximate upper bound values of ψ_r are given in Figure 7.24. Figure 7.24 are obtained under low-turbulent conditions. These coefficients are assumed to be safe.

NOTE 2 Figure 7.24 may also be used for buildings with h/d> 5.0

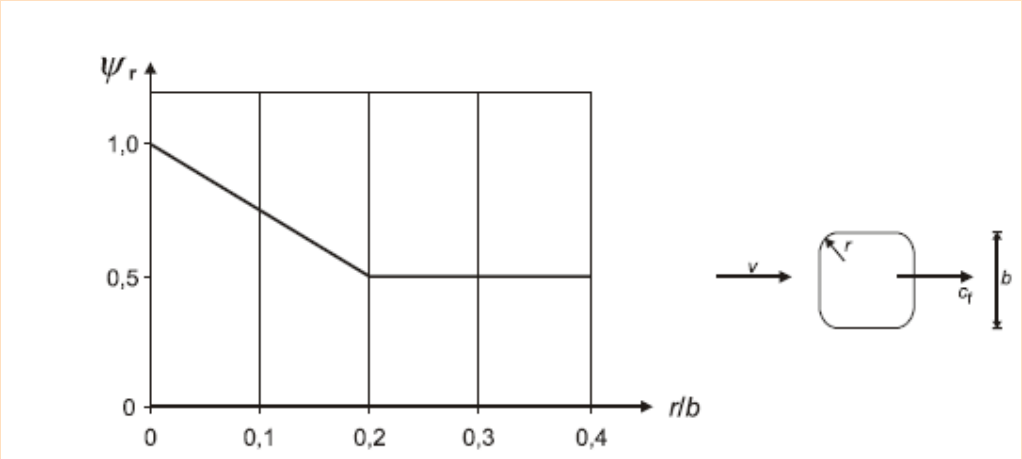

Figure 7.24 — Reduction factor ψ_r for a square cross-section with rounded corners

(2) The reference area A_{ref} should be determined by Expression (7.11)

$$A_{ref} = l \cdot b \qquad (7.11)$$

where:

l is the length of the structural element being considered.

The reference height z_e is equal to the maximum height above ground of the section being considered.

(3) For plate-like sections ($d/b < 0,2$) lift forces at certain wind angles of attack may give rise to higher values of c_f up to an increase of 25 %.

7.7 Structural elements with sharp edged section

(1) The force coefficient c_f of structural elements with sharp edged section (e.g. elements with cross-sections such as those shown in Figure 7.25) should be determined using Expression (7.12).

$$c_f = c_{f,0} \cdot \psi_\lambda \qquad (7.12)$$

ψ_λ is the end-effect factor (see 7.13)

NOTE 1 The National Annex may specify $c_{f,0}$. For all elements without free-end flow the recommended value is 2,0. This value is based on measurements under low-turbulent conditions. It is assumed to be a safe value.

NOTE 2 Expression (7.12) and Figure 7.25 may also be used for building with h/d> 5,0

ONLY FOR REVIEW PURPOSE

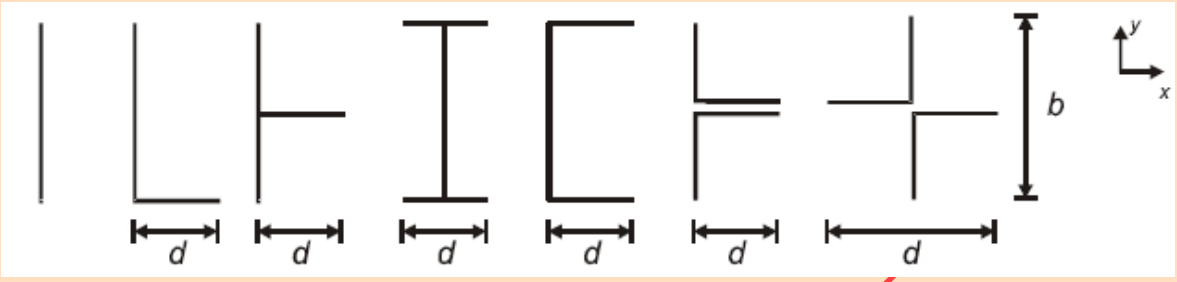

Figure 7.25 — Sharp edged structural sections

(2) The reference areas (see Figure 7.25), should be taken as follows: in x – direction.

In x-direction: $A_{ref,x} = l \cdot b$

in y-direction: $A_{ref,y} = l \cdot d$ (7.13)

where:

l is the length of the structural element being considered.

(3) In all cases the reference height z_e should be taken as equal to the maximum height above ground of the section being considered.

ONLY FOR REVIEW PURPOSE

7.8 Structural elements with regular polygonal section

(1) The force coefficient c_f of structural elements with regular polygonal section with 5 or more sides should be determined using Expression (7.14).

$$c_f = c_{f,0} \cdot \psi_\lambda \quad (7.14)$$

where:

ψ_λ is the end-effect factor as defined in 7.13.

$c_{f,0}$ is the force coefficient of structural elements without free-end flow.

Note: The values of $c_{f,0}$ may be given in the National Annex. Recommended conservative values based on measurements under low-turbulent conditions are given in Table 7.11.

Table 7.11-Force coefficient cf,0 for regular polygonal sections

Number of sides	Sections	Finish of surface and of corners	Reynolds number Re [a]	$c_{f,0}$
5	Pentagon	all	All	1,80
6	Hexagon	all	All	1,60
8	Octagon	surface smooth [b] $r/b < 0,075$	$Re \le 2,4 \cdot 10^5$	1,45
			$Re \ge 3 \cdot 10^5$	1,30
		surface smooth [b] $r/b \ge 0,075$	$Re \le 2 \cdot 10^5$	1,30
			$Re \ge 7 \cdot 10^5$	1,10
10	Decagon	all	All	1,30
12	Dodecagon	surface smooth [c] corners rounded	$2 \cdot 10^5 < Re < 1,2 \cdot 10^6$	0,90
		all others	$Re < 4 \cdot 10^5$	1,30
			$Re > 4 \cdot 10^5$	1,10
16-18	Hexdecagon to Octadecagon	surface smooth [c] corners rounded	$Re < 2 \cdot 10^5$	treat as a circular cylinder, see (7.9)
			$2 \cdot 10^5 \le Re < 1,2 \cdot 10^6$	0,70

[a] Reynolds number with $v = v_m$ and v_m given in 4.3, Re, is defined in 7.9

[b] r = corner radius, b = diameter of circumscribed circumference, see Figure 7.26

[c] From wind tunnel tests on sectional models with galvanised steel surface and a section with b = 0,3 m and corner radius of 0,06 $\cdot b$

(2) For buildings where h/d> 5, $c_{f,0}$ may be determined from Expression (7.13)

Note: See also Table 7.11 and Figure 7.26

ONLY FOR RE

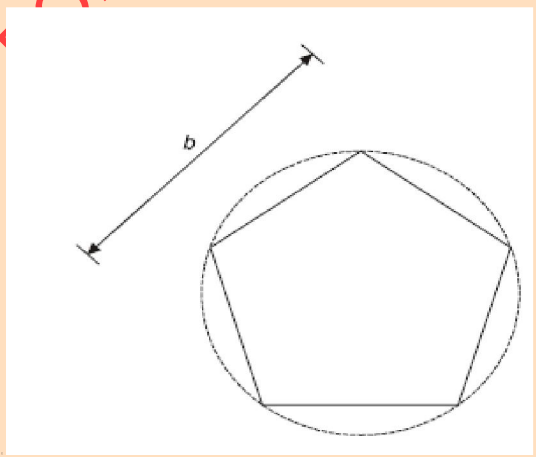

Figure 7.26 — Regular polygonal section

(3) The reference area Aref is should be obtained from Expression (7.15).

$A_{ref} = l \cdot b$ (7.15)

where:

l is the length of the structural element being considered.

b is the diameter of circumscribed circumference, see Figure

(4) The reference height z_e is equal to the maximum height above ground of the section being considered.

7.9 Circular cylinders

7.9.1 External pressure coefficients

(1) Pressure coefficients of sections depend upon the Reynolds numbers Re defined by Expression (7.16).

$$\mathrm{Re} = \frac{b \cdot \mathrm{v}(z_e)}{\mathrm{v}} \quad (7.16)$$

Where:

b is the diameter

v is the kinematic viscosity of the air ($v = 15 \cdot 10^{-6}$ m^2/s)

$v(z_e)$ is the peak wind velocity defined in Note 2 of Figure 7.27at height z_e

(2) The external pressure coefficients c_{pe} of circular cylinders should be determined from Expression (7.17).

$$c_{pe} = c_{p,0} \cdot \psi_{\lambda\alpha} \quad (7.17)$$

where:

$c_{p,0}$ is the external pressure coefficient without free-end flow (see (3))

$\psi_{\lambda\alpha}$ is the end-effect factor (see (4))

(3) The external pressure coefficient $c_{p,0}$is given in Figure 7.27 for various Reynolds numbers as a function of angle α.

(4) The end-effect factor $\psi_{\lambda\alpha}$is given by Expression (7.18).

$$\begin{aligned} &\psi_{\lambda\alpha} = 1 && \text{for} \quad 0^o \le \alpha \le \alpha_{\min} \\ &\psi_{\lambda\alpha} = \psi_\lambda + (1 - \psi_\lambda) \cdot \cos\left(\frac{\pi}{2} \cdot \left(\frac{\alpha - \alpha_{\min}}{\alpha_A - \alpha_{\min}}\right)\right) && \text{for} \quad \alpha_{\min} < \alpha < \alpha_A \\ &\psi_{\lambda\alpha} = \psi_\lambda && \text{for} \quad \alpha_A \le \alpha \le 180^o \end{aligned} \quad (7.18)$$

where:

ONLY FOR REVIEW PURPOSE

α_A is the position of the flow separation (see Figure 7.27)
ψ_λ is the end-effect factor (see 7.13)

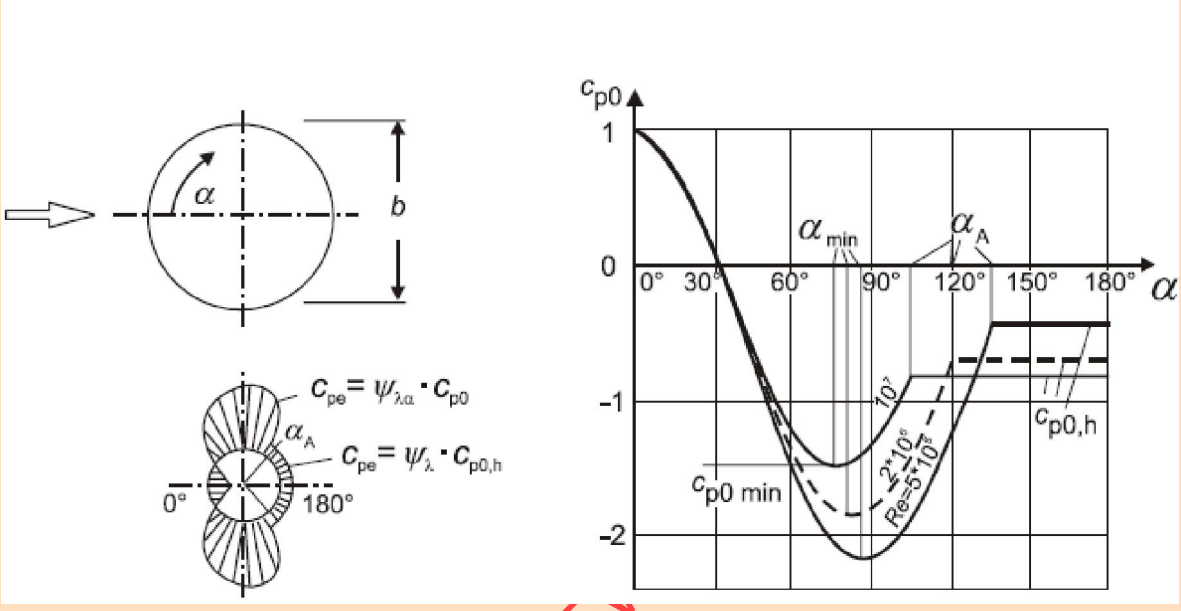

NOTE 1 Intermediate values may be interpolated linearly

NOTE 2 Typical values in the above Figure are shown in Table 7.12. Figure and Table are based the Reynolds number with $v = \sqrt{\frac{2 \cdot q_p}{\rho}}$ and q_p given in 4.5

NOTE 3 The above Figure is based on an equivalent roughness k/b less than $5 \cdot 10^{-4}$. Typical values of roughness height k are given in Table 7.13.

Figure 7.27 —Pressure distribution for circular cylinders for different Reynolds number ranges and without end-effects

ONLY FOR REVIEW

Table 7.12 — Typical values for the pressure distribution for circular cylinders for different Reynolds number ranges and without end-effects

Re	α_{min}	$c_{p0,min}$	α_A	$c_{p0,h}$
$5 \cdot 10^5$	85	-2,2	135	-0,4
$2 \cdot 10^6$	80	-1,9	120	-0,7
10^7	75	-1,5	105	-0,8

where:

α_{min} is the position of the minimum pressure in [°]

$c_{p0,min}$ is the value of the minimum pressure coefficient

α_A is the position of the flow separation in [°]

$c_{p0,h}$ is the base pressure coefficient

ONLY FOR REVIEW PURPOSE

(5) The reference area A_{ref} should be determined from Expression (7.19):

$$A_{ref} = l \cdot b \qquad (7.19)$$

(6) The reference height ze is equal to the maximum height above ground of the section being considered.

7.9.2 Force coefficients

(1) The force coefficient c_f for a finite circular cylinder should be determined from Expression (7.20).

$$c_f = c_{f,0} \cdot \psi_\lambda \qquad (7.20)$$

where:

$c_{f,0}$ is the force coefficient of cylinders without free-end flow (see Figure 7.28)

ψ_λ is the end-effect factor (see 7.13)

NOTE 1 Figure 7.28 may also be used for building with h/d> 5.0

NOTE 2 Figure 7.28 is based on the Reynolds number with v = $\sqrt{\frac{2.q_p}{\rho}}$ and q_p given in 4.5

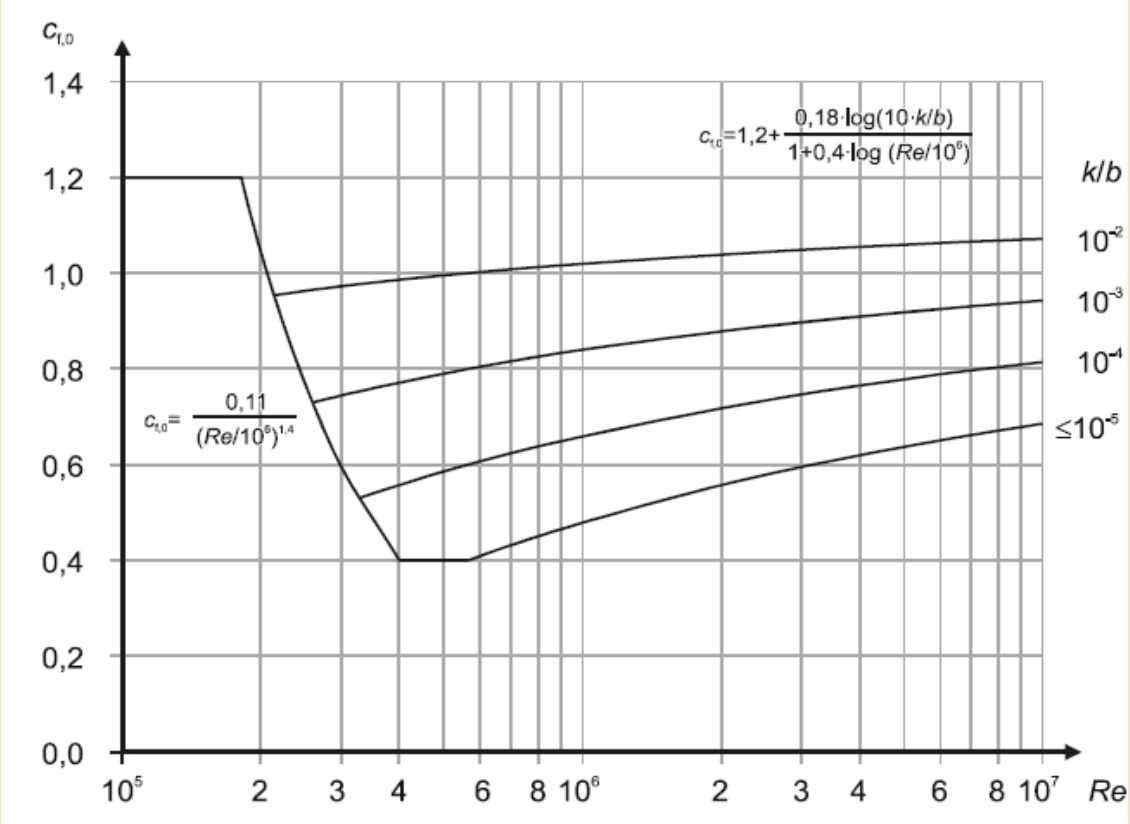

Figure 7.28 — Force coefficient $c_{f,0}$ for circular cylinders without free-end flow and for different equivalent roughness k/b

(2) Values of equivalent surface roughness k are given in Table 7.13.

(3) For stranded cables $c_{f,0}$ is equal to 1,2 for all values of the Reynolds number Re.

Table 7.13 — Equivalent surface roughness k

Type of surface	**Equivalent roughness k** mm	**Type of surface**	**Equivalent roughness k**mm
glass	0,0015	smooth concrete	0,2
polished metal	0,002	planed wood	0,5
fine paint	0,006	rough concrete	1,0
spray paint	0,02	rough sawn wood	2,0
bright steel	0,05	rust	2,0
cast iron	0,2	brickwork	3,0

ONLY FOR

galvanised steel	0,2		

(4) The reference area A_{ref} should be obtained by Expression (7.21).

$$A_{ref} = l \cdot b \tag{7.21}$$

where:

l is the length of the structural element being considered.

(5) The reference height z_e is equal to the maximum height above ground of the section being considered.

(6) For cylinders near a plane surface with a distance ratio $z_g/b < 1.5$ (see Figure 7.29) special advice is necessary.

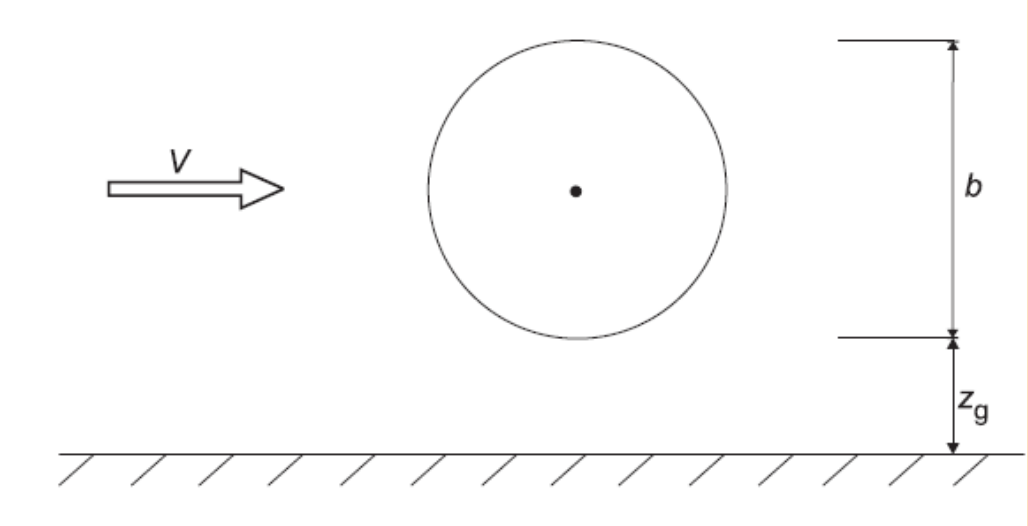

Figure 7.29 — Cylinder near a plane surface

ONLY FOR PURPOSE

7.9.3 Force coefficients for vertical cylinders in a row arrangement

For vertical circular cylinders in a row arrangement, the force coefficient $cf_{,0}$ depends on the wind direction related to the row axis and the ratio of distance a and the diameter b as defined in Table 7.14. The force coefficient, c_f, for each cylinder may be obtained by Expression (7.22):

$$c_f = c_{f,0} \cdot \psi_\lambda \cdot \kappa \tag{7.22}$$

where:

$c_{f,0}$ is the force coefficient of cylinders without free-end flow, (see 7.9.2)

ψ_λ is the end-effect factor (see 7.13)

κ is the factor given in Table 7.14 (for the most unfavourable wind direction)

Table 7.14 — Factor κ for vertical cylinders in a row arrangement

a/b	κ
$a/b < 3{,}5$	1,15
$3{,}5 < a/b < 30$	$\kappa = \frac{210 - \frac{a}{b}}{180}$
$a/b > 30$	1,00

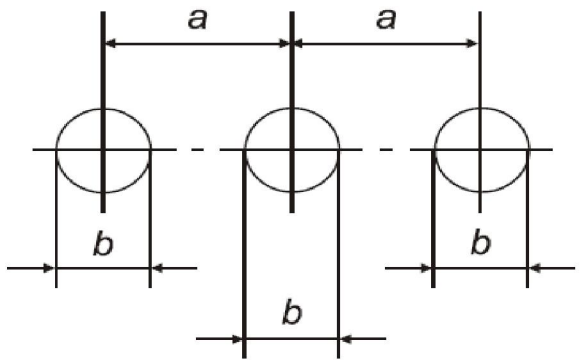

a: distance
b: diameter

7.10 Spheres

(1) The alongwind force coefficient $c_{f,x}$ of spheres should be determined as a function of the Reynolds number Re (see 7.9.1) and the equivalent roughness k/b (see Table 7.13).

NOTE 1 The values of $c_{f,x}$ may be given in the National Annex. Recommended values based on measurements in low turbulent flow are given in Figure 7.30. Figure 7.30 is based on the Reynolds number with $v = \sqrt{\frac{2.q_p}{\rho}}$ and q_p given in 4.5

NOTE 2 The values in Figure 7.30 are limited to values $z_g > b/2$, where z_g is the distance of the sphere from a plain surface, b is the diameter (see Figure 7.31). For $z_g < b/2$ the force coefficient $c_{f,x}$ is be multiplied by the



Figure 7.30 — Along wind force coefficient of a sphere

ONLY FOR REVIEW PURPOS

(2) The vertical force coefficient $c_{f,z}$ of spheres is given by Expression (7.23).

$$c_{f,z} = 0 \quad \text{for} \quad z_g > \frac{b}{2}$$
$$c_{f,z} = 0.60 \quad \text{for} \quad z_g < \frac{b}{2} \qquad (7.22)$$

3) In both cases the reference area A_{ref} should be obtained by Expression (7.24).

$$A_{ref} = \pi \cdot \frac{b^2}{2} \qquad (7.23)$$

(4) The reference height should be taken as:

$$z_e = z_g + \frac{b}{2} \qquad (7.24)$$

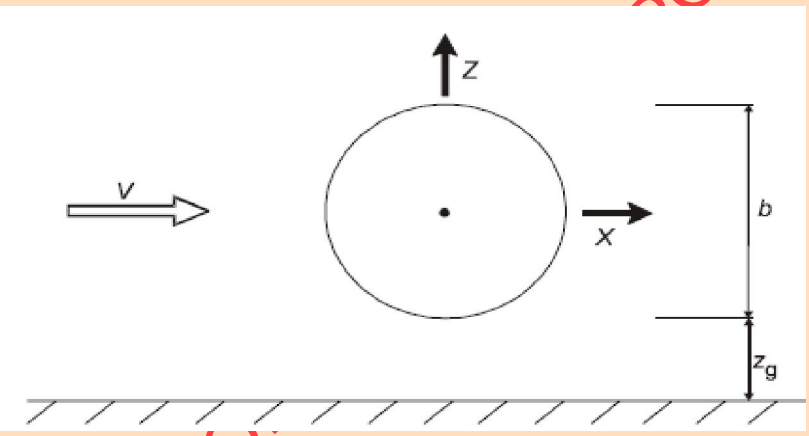

Figure 7.31 — Sphere near a plain surface

7.11 Lattice structures and scaffoldings

(1) The force coefficient, c_f, of lattice structures and scaffoldings should be obtained by Expression (7.25).

$$c_f = c_{f,0} \cdot \psi_\lambda \qquad (7.25)$$

where:

$c_{f,0}$ is the force coefficient of lattice structures and scaffoldings without end-effects. It is given by Figures 7.33 to 7.35 as a function of solidity ratio ϕ (7.11 (2)) and Reynolds number Re.

Re is the Reynolds number using the average member diameter bi, see Note 1 ψ_λ is the end-effect factor (see 7.13) as a function of the slenderness of the structure, λ, calculated with land width *b* = *d*, see Figure 7.32.

ONLY FOR PURPOSE

Note 1: Figures 7.35 is based on the Reynolds number withv = $\sqrt{\frac{2.q_p}{\rho}}$and q_p given in 4.5

Note 2: The National Annex may give a reduction factor for scaffolding without air tightness devices and affected by solid building obstruction. A recommended value is given in prEN 12811.

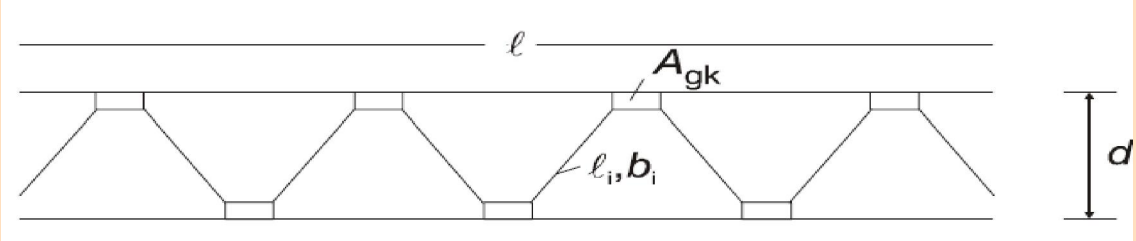

Figure 7.32 — Lattice structure or scaffolding

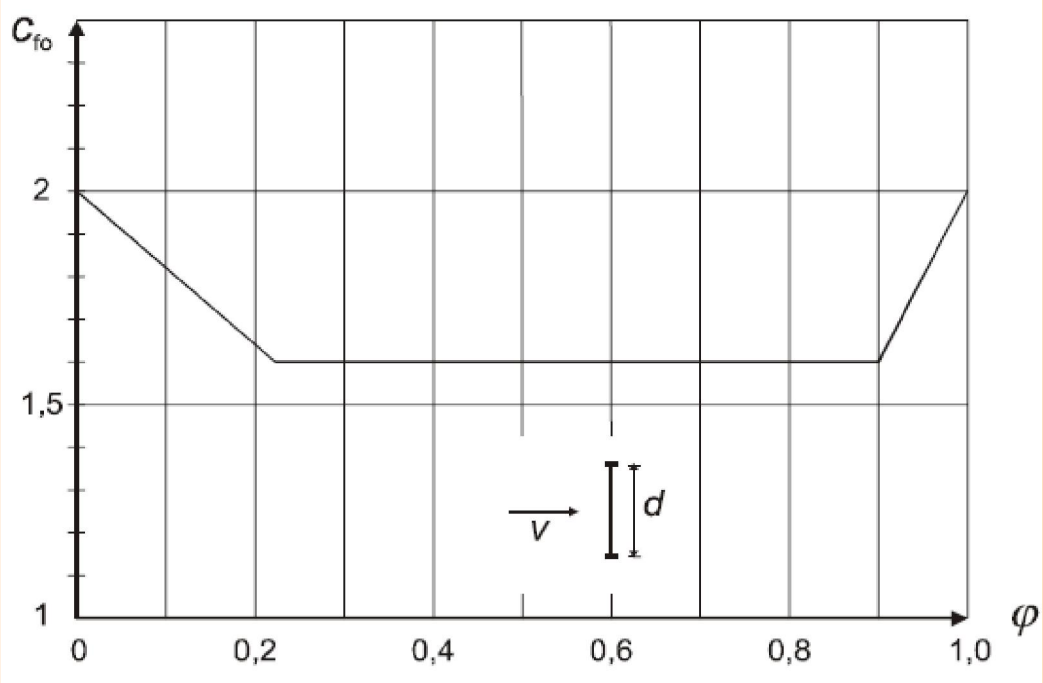

Figure 7.33 — Force coefficient $c_{f,0}$ for a plane lattice structure with angle members as a function of solidity ratio ϕ

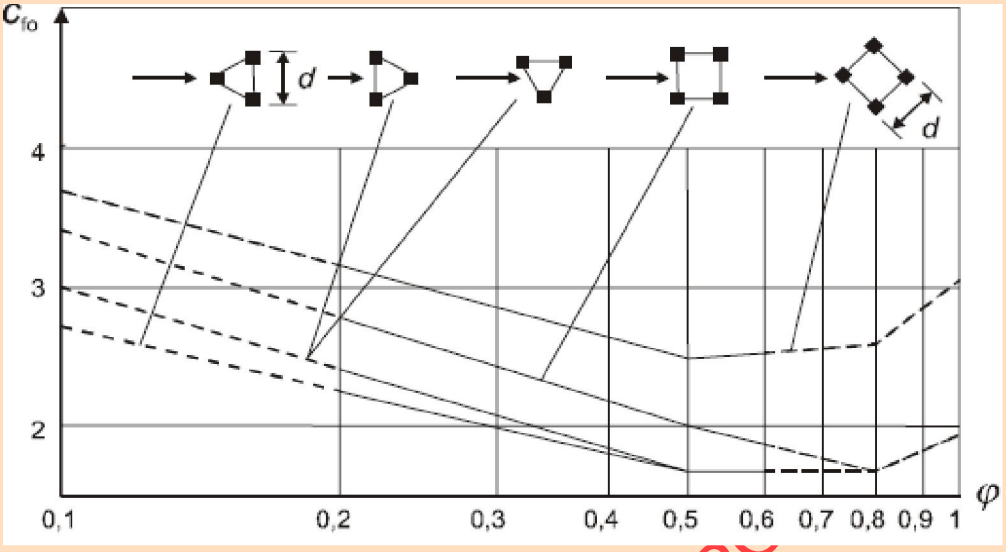

Figure 7.34 —Force coefficient $c_{f,0}$ for a spatial lattice structure with angle members as a function of solidity ratio ϕ

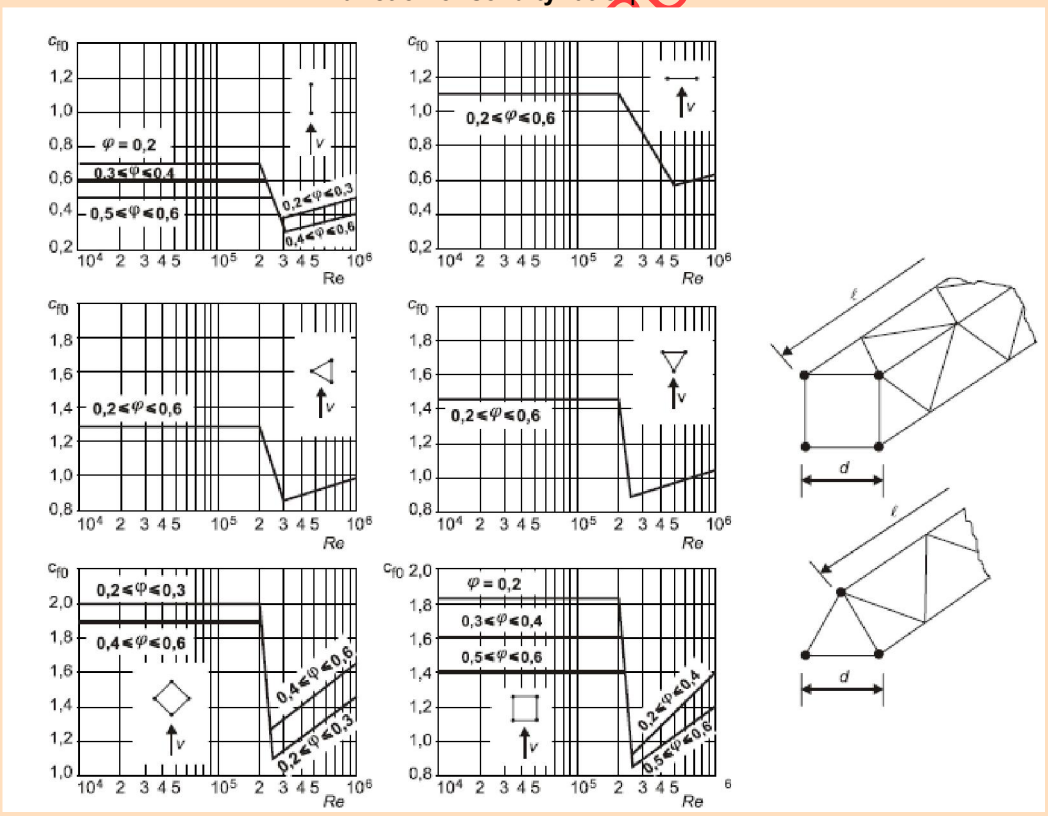

Figure 7.35 — Force coefficient $c_{f,0}$ for plane and spatial lattice structure with members of circular cross-section

(2) The solidity ratio, ϕ, is defined by Expression (7.26).

$$\varphi = \frac{A}{A_c} \qquad (7.26)$$

where:

A is the sum of the projected area of the members and gusset plates of the face projected normal to the face: $A = \sum_i b_i \cdot l_i + \sum_k A_{gk}$

A_c is the area enclosed by the boundaries of the face projected normal to the face = d l

L is the length of the lattice

d is the width of the lattice

b_i, *li* is the width and length of the individual member i (see Figure 7.32), projected normal to the face

A_{gk} is the area of the gusset plate k

(3) The reference area A_{ref} should be determined by Expression (7.27)

$$A_{ref} = A \qquad (7.27)$$

(4) The reference height z_e is equal to the maximum height of the element above ground.

7.12 Flags

(1) Force coefficients c_f and reference areas A_{ref} for flags are given in Table 7.15.

(2) The reference height z_e is equal to the height of the flag above ground.

ONLY FOR REVIEW PURPOSE

Table 7.15 — Force coefficients C_f for flags

Flags	A_{ref}	c_f
Fixed Flags 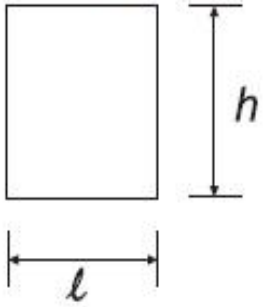 Force normal to the plane	$h \cdot \ell$	1,8
Free Flags a) 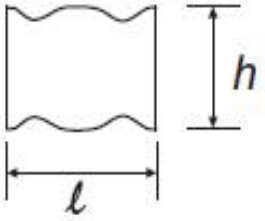 b) 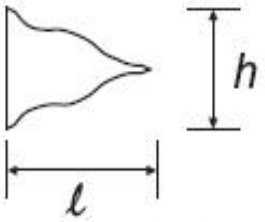 Force in the plane	$h \cdot \ell$ $0{,}5 \cdot h \cdot \ell$	$0{,}02 + 0{,}7 \cdot \frac{m_f}{\rho \cdot h} \cdot \left(\frac{A_{ref}}{h^2}\right)^{-1{,}25}$

where: m_f mass per unit area of the flag
ρ air density (7.1)
z_e height of the flag above ground

NOTE The equation for free flags includes dynamic forces from the flag flutter effect

7.13 Effective slenderness λ and end-effect factor ψ_λ

(1) Where relevant, the end-effect factor ψ_λ should be determined as a function of slenderness ratio λ.

Note: The force coefficients, $c_{f,0}$, given in 7.6 to 7.12 are based on measurements on structures without free-end flow away from the ground. The end-effect factor takes into account the reduced resistance of the structure due to the wind flow around the end (end-effect). Figure 7.36 and Table 7.16 are based on measurements in low turbulent flow. Values, taking the effect of turbulence into account may be specified in the National Annex.

(2) The effective slenderness λ should be defined depending on the dimensions of the structure and its position.

Note: The National Annex may give values for λ and ψ_λ. Recommended values for λ are given in Table 7.16 and indicative values for ψ_λ are given in Figure 7.36 for different solidity ratio ϕ.

ONLY FOR REVIEW PURPOSE

Table 7.16 — Recommended values of λ for cylinders, polygonal sections, rectangular sections, sharp edged structural sections and lattice structures

No.	Position of the structure, wind normal to the plane of the page	Effective slenderness λ
1	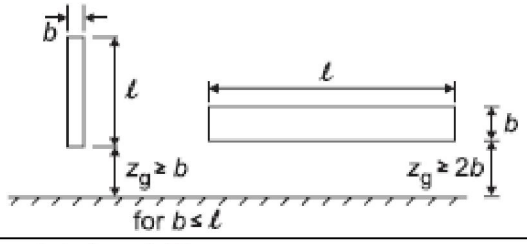	For polygonal, rectangular and sharp edged sections and lattice structures: for $\ell \geq 50$ m, $\lambda = 1{,}4\ \ell/b$ or $\lambda = 70$, whichever is smaller for $\ell < 15$ m, $\lambda = 2\ \ell/b$ or $\lambda = 70$, whichever is smaller For circular cylinders: for $\ell \geq 50$, $\lambda = 0{,}7\ \ell/b$ or $\lambda = 70$, whichever is smaller for $\ell < 15$ m, $\lambda = \ell/b$ or $\lambda = 70$, whichever is smaller For intermediate values of ℓ, linear interpolation should be used
2	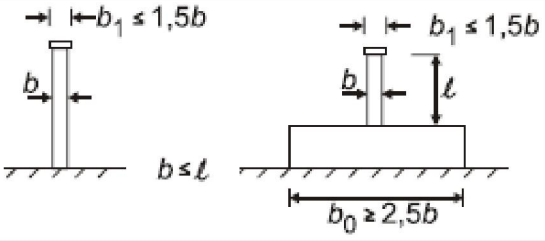	
3	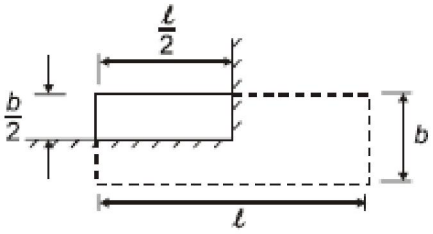	
4	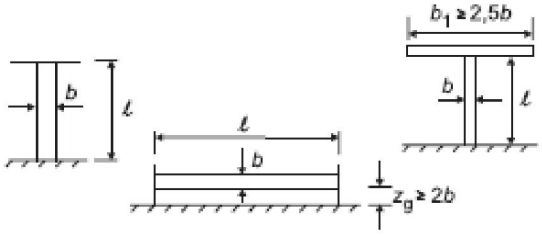	for $\ell \geq 50$ m, $\lambda = 0{,}7\ \ell/b$ or $\lambda = 70$, whichever is larger for $\ell < 15$ m, $\lambda = \ell/b$ or $\lambda = 70$, whichever is larger For intermediate values of ℓ, linear interpolation should be used

ONL

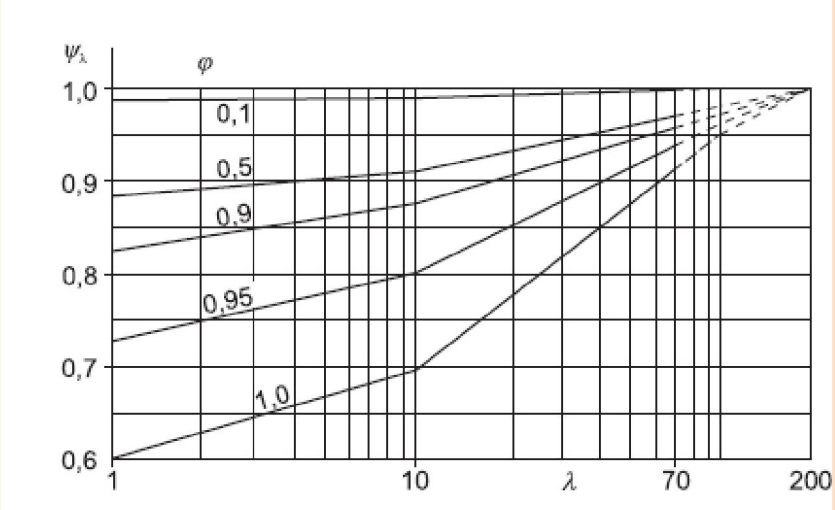

Figure 7.36 –Indicative values of the end-effect factor ψ_λ as a function of solidity ratio ϕ versus slenderness λ

V FOR REVIEW PURPOSE

(3) The solidity ratio φ (see Figure 7.37) is given by Expression (7.28).

$$\varphi = \frac{A}{A_c} \tag{7.28}$$

where:

A is the sum of the projected areas of the members

A_c is the overall envelope area $A_c = l \cdot b$

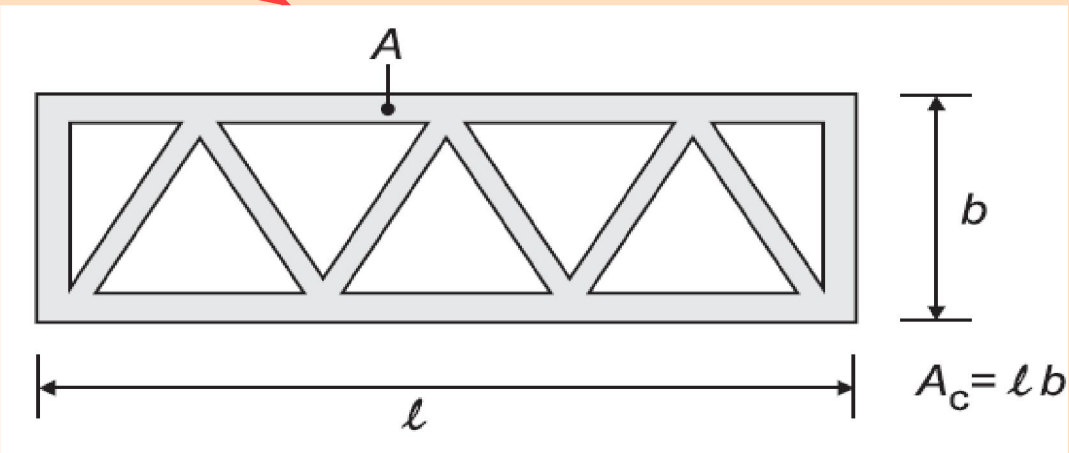

Figure 7.37 — Definition of solidity ratio φ

SECTION 8 WIND ACTIONS ON BRIDGES

8.1 General

(1) This section only applies to bridges of constant depth and with cross-sections as shown in Figure 8.1 consisting of a single deck with one or more spans.

Note 1: Wind actions for other types of bridges (e.g. arch bridges, bridges with suspension cables or cable stayed, roofed bridges, moving bridges and bridges with multiple or significantly curved decks) may be defined in the National Annex.

Note 2: The angle of the wind direction to the deck axis in the vertical and horizontal planes may be defined in the National Annex.

ONLY FOR REVIEW PURPOSE

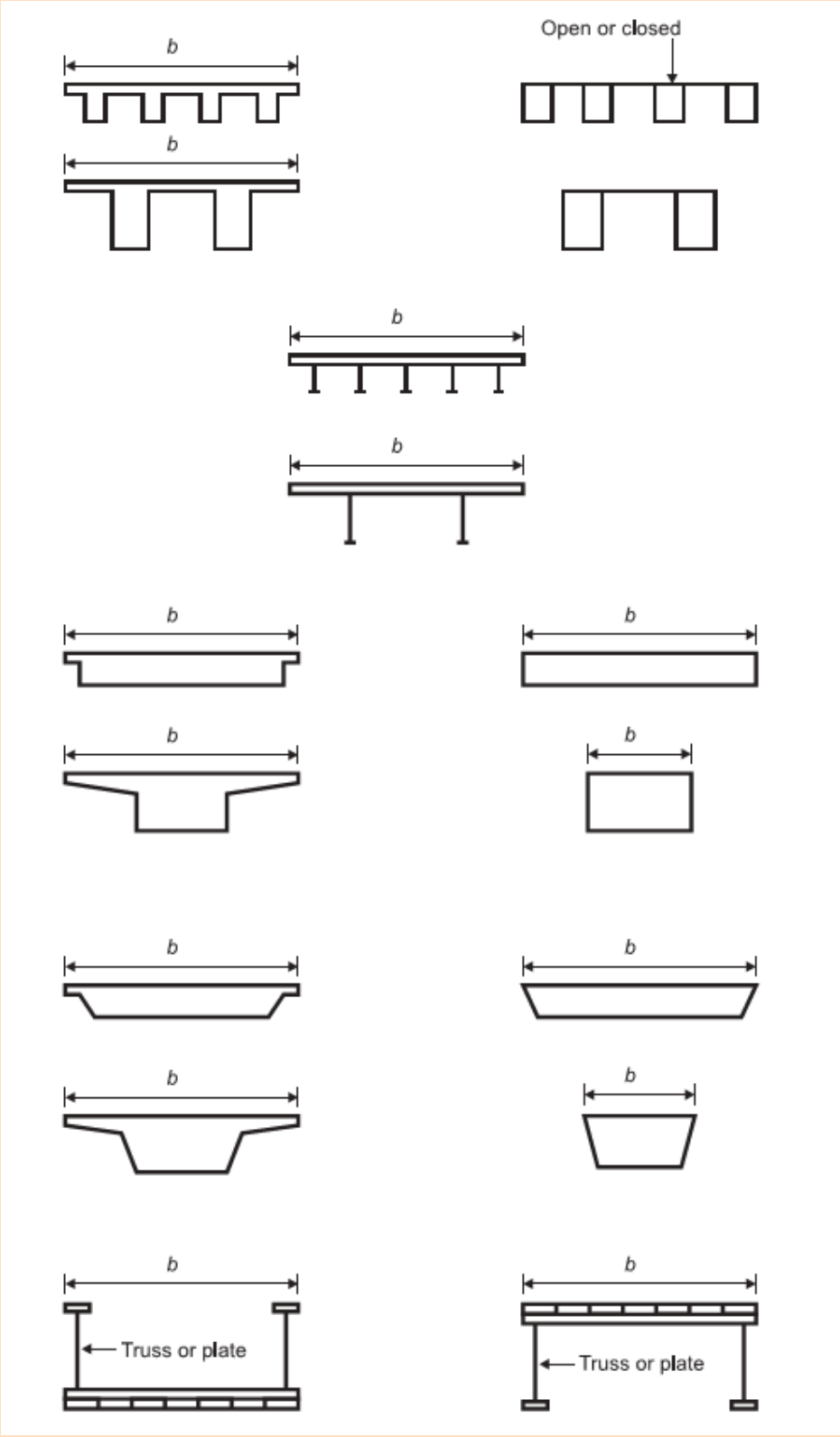

Figure 8.1 – Examples of cross-sections of normal construction decks

(2) Wind forces exerted on decks are dealt with in 8.2 and 8.3. Those exerted on piers are dealt with in 8.4. The forces exerted on various parts of a bridge due to wind blowing in the same direction should be considered as simultaneous if they are unfavourable.

(3) Wind actions on bridges produce forces in the x, y and z directions as shown in Figure 8.2,

where:
x-direction is the direction parallel to the deck width, perpendicular to the span
y-direction is the direction along the span
z-direction is the direction perpendicular to the deck

The forces produced in the x- and y-directions are due to wind blowing in different directions and normally are not simultaneous. The forces produced in the z-direction can result from the wind blowing in a wide range of directions; if they are unfavourable and significant, they should be taken into account as simultaneous with the forces produced in any other direction.

NOTE The notation used for bridges differs from that defined in 1.6. The following notations are used for bridges:

L length in y-direction

b width in x-direction

d depth in z-direction

In Figure 8.2 the values to be given to L, b and d in various cases are, where relevant, more precisely defined in further clauses. When Sections 5 to 7 are referred to, the notations for b and d need to be readjusted.

OR REVIEW PURPOSE

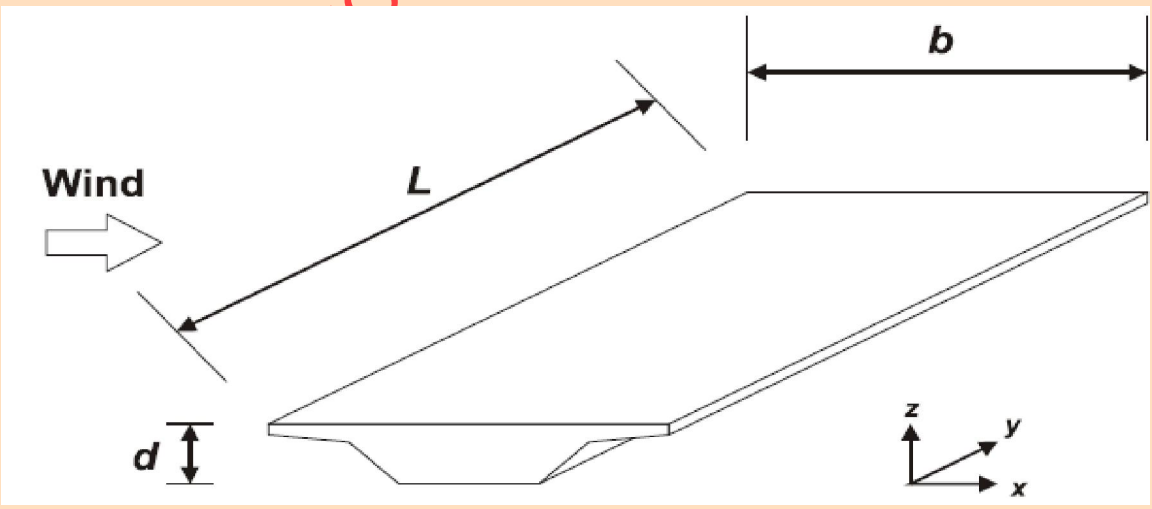

Figure 8.2 — Directions of wind actions on bridges

(4) Where road traffic is considered to be simultaneous with the wind (see A2.2.1 and A2.2.2 in Annex A2 to EBCS EN 1990) the combination value $\psi_0 F_{wk}$ of the wind action on the bridge and on the vehicles should be limited to a value F_w^* determined by substituting a value $v_{b,o}^*$ for the fundamental value of the basic velocity $v_{b,0}$.

NOTE The National Annex may give a value for $v_{b,o}^*$ The recommended value is 23 m/s.

(5) Where railway traffic is considered to be simultaneous with the wind (see A2.2.1 and A2.2.4 in Annex A2 to EBCS EN 1990) the combination value $\psi_0 F_{wk}$ of the wind action on the bridge and on the trains should be limited to a value F_W^{**} determined by substituting a value $v_{b,o}^*$ for the fundamental value of the basic velocity $v_{b,0}$.

NOTE The value of $v_{b,o}^{**}$ may be defined in the National Annex. The recommended value of $v_{b,o}^{**}$ is 25 m/s.

8.2 Choice of the response calculation procedure

(1) It should be assessed whether a dynamic response procedure is needed for bridges.

NOTE 1 The National Annex may give criteria and procedures

NOTE 2 If a dynamic response procedure is not needed, $c_s c_d$ may be taken equal to 1,0

NOTE 3 For normal road and railway bridge decks of less than 40 m span a dynamic response procedure is generally not needed. For the purpose of this categorization, normal bridges may be considered to include bridges constructed in steel, concrete, aluminium or timber, including composite construction, and whose shape of cross sections is generally covered by Figure 8.1.

8.3 Force coefficients

(1) Force coeffcients for parapets and gantries on bridges should be determined were relevant.

NOTE The National Annex may give force coefficients for parapets and gantries on bridges. It is recommended to use Section 7.4.

8.3.1 Force coefficients in x-direction (general method)

(1) Force coefficients for wind actions on bridge decks in the x-direction are given by :

$$c_{f,x} = c_{fx,0} \qquad (8.1)$$

where:

$c_{fx,0}$ is the force coefficient without free-end flow (see 7.13).

Note 1: A bridge has usually no free-end flow because the flow is deviated only along two sides (over and under the bridge deck).

Note 2: For normal bridges $c_{fx,0}$ may be taken equal to 1,3. Alternatively, $c_{fx,0}$ may be taken from Figure 8.3, ", where some typical cases for determining $A_{ref,x}$ (as defined in 8.3.1(4)) and d_{to}t are shown.

ONLY FOR REVIEW PURPOSE

Note 3: Where the angle of inclination of the wind exceeds 10°, the drag coefficient may be derived from special studies. This angle of inclination may be due to the slope of the terrain in the on-coming wind direction.

a) Construction phase, open parapets (more than 50% open) and open safety barriers
b) Solid parapets, noise barrier, solid safety barriers or traffic

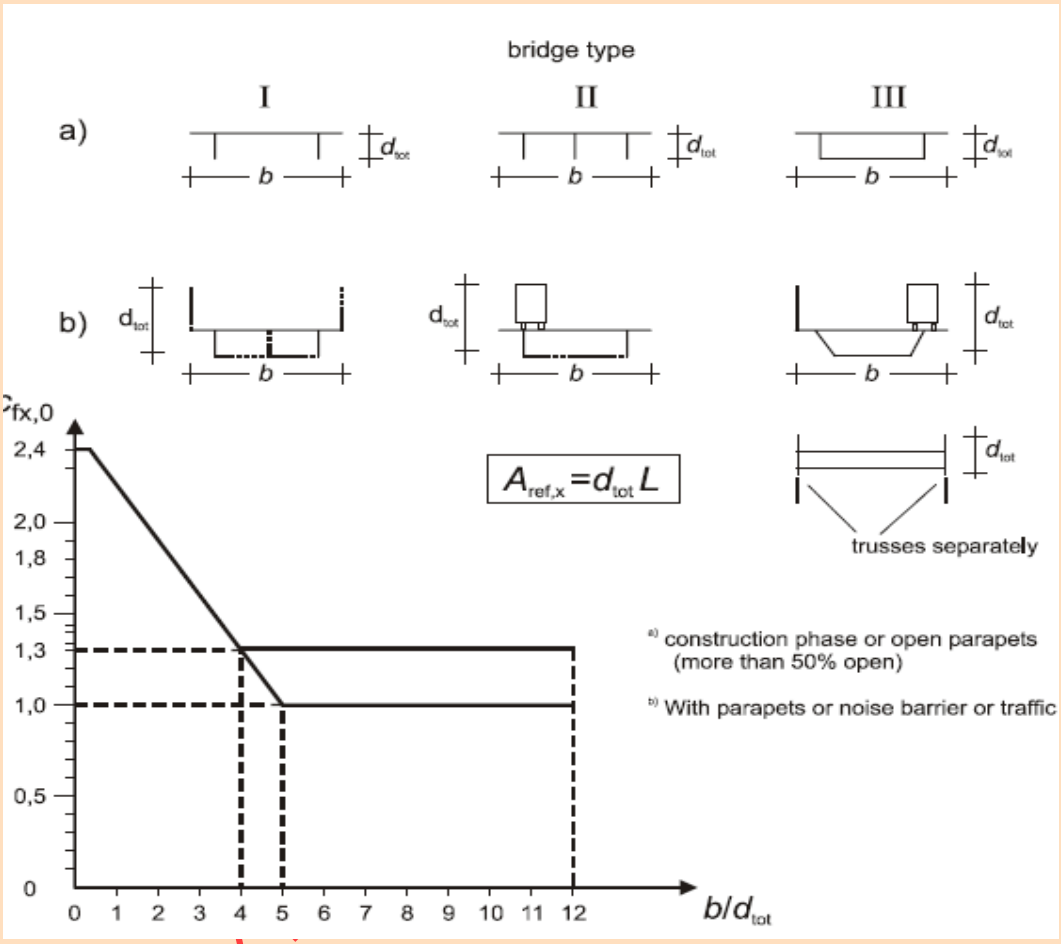

Note 4: Where two generally similar decks are at the same level and separated transversally by a gap not significantly exceeding 1 m, the wind force on the windward structure may be calculated as if it were a single structure. In other cases special consideration may have to be given to wind-structure interaction.

Figure 8.3 — Force coefficient for bridges, $c_{fx,0}$

(2) Where the windward face is inclined to the vertical (see Figure 8.4), the drag coefficient cfx,0 may be reduced by 0,5 % per degree of inclination, α1 from the vertical, limited to a maximum reduction of 30 %.

Note: This reduction is not applicable to FW, defined in 8.3.2, unless otherwise specified in the National Annex.

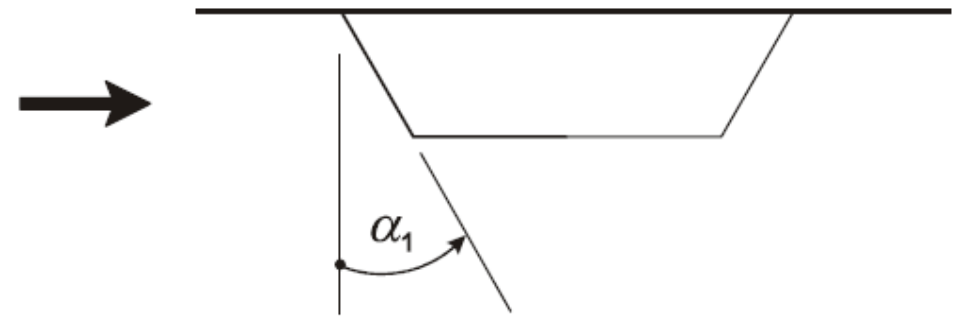

Figure 8.4 — Bridge with inclined windward face

(3) Where a bridge deck is sloped transversely, cfx,0 should be increased by 3% per degree of inclination, but not more than 25 %.

(4) Reference areas $A_{ref,x}$ for load combinations without traffic load should be based on the relevant value of d_{tot} as defined in Figure 8.5 and Table 8.1::

(a) for decks with plain (web) beams, the sum of:

1) the face area of the front main girder

2) the face area of those parts of the other main girders projecting under (underlooking) this first one 3)the face area of the part of one cornice or footway or ballasted track projecting over the front main girder

4) the face area of solid restraints or noise barriers, where relevant, over the area described in 3) or, in the absence of such equipment, 0,3 m for each open parapet or barrier.

b) for decks with trussed girders, the sum of :

1) the face area of one cornice or footway or ballasted track

2) those solid parts of all main truss girders in normal projected elevation situated above or underneath the area as described in 1).

3) the face area of solid restraints or noise barriers, if relevant, over the area described in 1) or, in the absence of such equipment, 0,3 m for each open parapet or barrier.

However, the total reference area should not exceed that obtained from considering an equivalent plain (web) beam of the same overall depth, including all projecting parts.

c) for decks with several main girders during construction, prior to the placement of the carriageway slab : the face area of two main girders.

ONLY FOR REVIEW PURPOSE

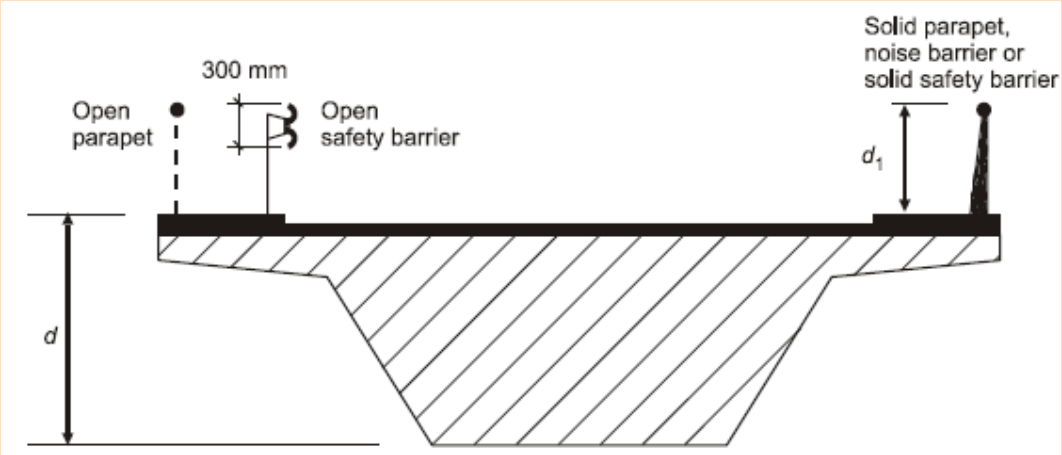

Figure 8.5 — Depth to be used for $A_{ref,x}$

Table 8.1 — Depth d_{tot} to be used for $A_{ref,x}$

Road restraint system	on one side	on both sides
Open parapet or open safety barrier	d + 0,3 m	d + 0,6 m
Solid parapet or solid safety barrier	d + d1	d + 2d1
Open parapet and open safety barrier	d + 0,6 m	d + 1,2 m

(5) Reference areas $A_{ref,x}$ for load combinations with traffic load are as specified in (4), with the following modification. Instead of the areas described above in a) 3) and 4) and b) 3), the following should be taken into account where they are larger :

a) for road bridges, a height of 2 m from the level of the carriageway, on the most unfavourable length, independently of the location of the vertical traffic loads,

b) for railway bridges, a height of 4 m from the top of the rails, on the total length of the bridge.

(6) The reference height, z_e, may be taken as the distance from the lowest ground level to the centre of the bridge deck structure, disregarding other parts (e.g. parapets) of the reference areas.

(7) Wind pressure effects from passing vehicles are outside the scope of this Part. For wind effects induced by passing trains see EBCS EN 1991-2..

ONLY FOR REVIEW PURPOSE

8.3.2 **Force in x-direction – Simplified Method**

(1) Where it has been assessed that a dynamic response procedure is not necessary, the wind force in the x-direction may be obtained using Expression (8.2):

$$F_w = \frac{1}{2} \cdot \rho \cdot v_b^2 \cdot C \cdot A_{ref,x} \qquad (8.2)$$

where :

v_b is the basic wind speed (see 4.2 (2))

C is the wind load factor. $C = c_e \cdot c_{f,x}$, where c_e is the exposure factor given in 4.5 and $c_{f,x}$ is given in 8.3.1(1) $A_{ref,x}$is the reference area given in 8.3.1

ρ is the density of air (see 4.5)

NOTE C-values may be defined in the National Annex. Recommended values are given in Table 8.2.

b/d_{tot}	$z_e \leq 20$ m	$z_e = 50$ m
≤ 0,5	5,7	7,1
≥ 4,0	3,1	3,8

This table is based on the following assumptions :

- terrain category II according to Table 4.1
- force coefficient $c_{f,x}$according to 8.3.1 (1)
- c_o=1,0
- k_l=1,0

For intermediate values of b/d_{tot}, and of z_e linear interpolation may be used

ONLY FOR REVIEW PURPOSE

8.3.3 **Wind forces on bridge decks in z-direction**

(1) Force coefficients $c_{f,z}$ should be defined for wind action on the bridge decks in the z-direction, both upwards and downwards (lift force coefficients). $c_{f,z}$ should not be used to calculate vertical vibrations of the bridge deck.

NOTE 1 The National Annex may give values for $c_{f,z}$. In the absence of wind tunnel tests the recommended value may be taken equal to ±0,9. This value takes globally into account the influence of a possible transverse slope of the deck, of the slope of terrain and of fluctuations of the angle of the wind direction with the deck due to turbulence.

As an alternative $c_{f,z}$may be taken from Figure 8.6. In using it:

the depth d_{tot}may be limited to the depth of the deck structure, disregarding the traffic and any bridge equipment for flat, horizontal terrain the angle α of the wind with the horizontal may be taken as ± 5° due to turbulence. This is also valid for hilly terrain when the bridge deck is at least 30 m above ground.

NOTE 2 This force may have significant effects only if the force is of the same order as the dead load.

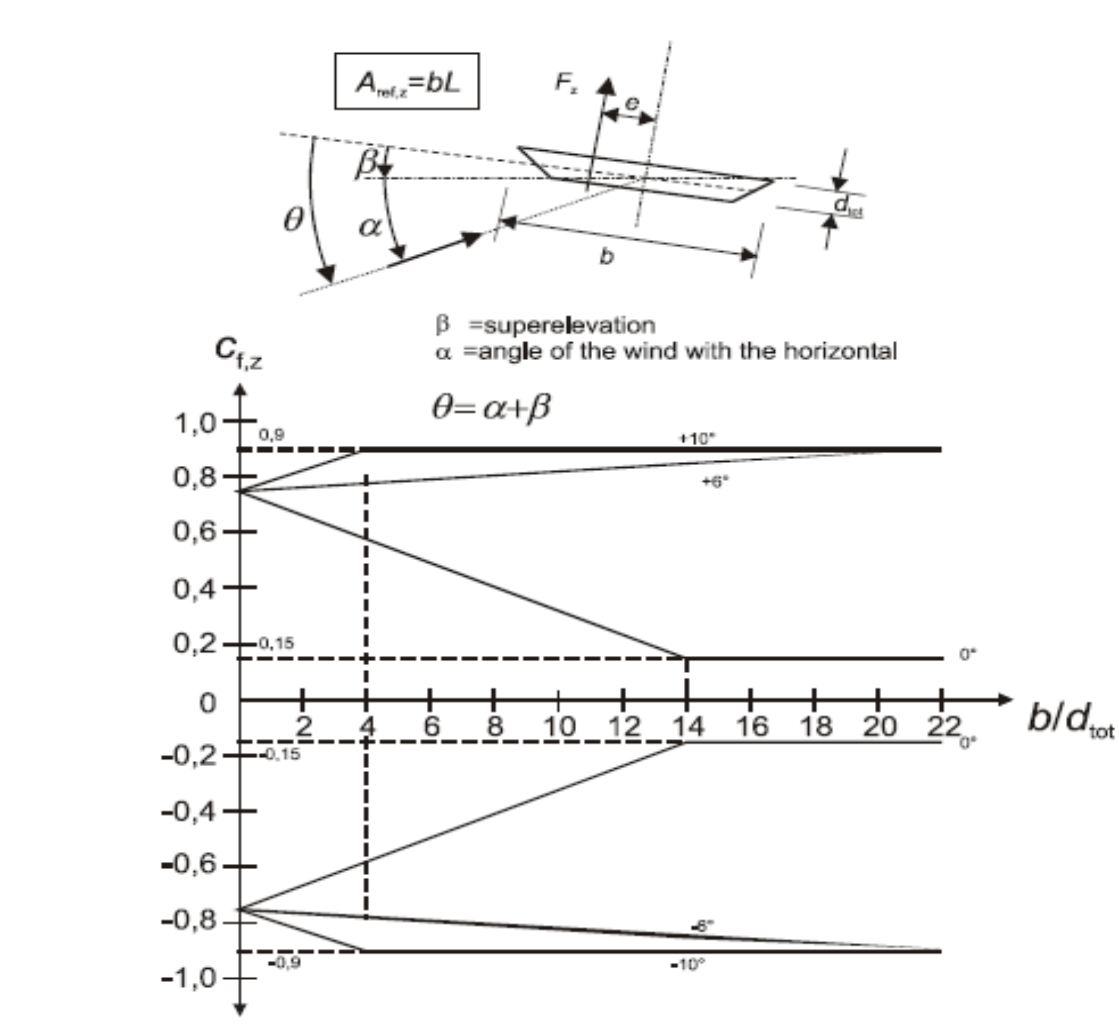

Figure 8.6 — Force coefficient $c_{f,z}$ for bridges with transversal slope and wind inclination

(2) The reference area $A_{ref,z}$ is equal to the plan area (see Figure 8.2) :

$$A_{ref,z} = b \cdot L \qquad (8.3)$$

(3) No end-effect factor should be taken into account.

(4) The reference height is the same as for $c_{f,x}$ (see 8.3.1(6)).

(5) If not otherwise specified the eccentricity of the force in the x-direction may be set to e = b/4.

8.3.4 Wind forces on bridge decks in y-direction

(1) If necessary, the longitudinal wind forces in y-direction should be taken into account.

NOTE The National Annex may give the values. The recommended values are:

- for plated bridges, 25 % of the wind forces in x-direction,

– for truss bridges, 50 % of the wind forces in x-direction.

8.4 Bridge piers

8.4.1 Wind directions and design situations

(1) The wind actions on bridge decks and their supporting piers should be calculated by identifying the most unfavourable direction of the wind on the whole structure for the effect under consideration.

(2) Separate calculations of wind actions should be made for transient design situations during construction phases when no horizontal transmission or redistribution of wind actions by the deck is possible. If during such phases a pier may bear cantilevering deck parts or scaffoldings, a possible asymmetry of wind actions on such elements should be taken into account.

NOTE Execution transient situations are usually more critical for piers and for some types of decks subject to particular execution methods than the persistent ones. For characteristic values during transient design situations see EBCS EN 1991-1-6. For scaffoldings, see 7.11.

8.4.2 Wind effects on piers

(1) Wind effects on piers should be calculated by using the general format defined in this Eurocode. For overall loads the provisions of Clauses 7.6, 7.8 or 7.9.2 should be used.

Note 1: Simplified rules may be given in the National Annex.

Note 2: The National Annex may give procedures for the treatment of asymmetric loading. The recommended procedure is to completely remove the design wind load from those parts of the structure where its action will produce a beneficial effect (see 7.1.2 (1)).

ONLY FOR REVIEW PURPOSE

ANNEX A
(INFORMATIVE)
TERRAIN EFFECTS

A.1 Illustrations of the upper roughness of each terrain category

Terrain category 0

Sea, coastal area exposed to the open sea



Terrain category I

Lakes or area with negligible vegetation and without obstacles



Terrain category II

Area with low vegetation such as grass and isolated obstacles (trees, buildings) with separations of at least 20 obstacle heights

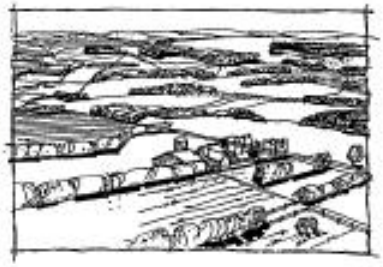

Terrain category III

Area with regular cover of vegetation or buildings or with isolated obstacles with separations of maximum 20 obstacle heights (such as villages, suburban terrain, permanent forest)



Terrain category IV

Area in which at least 15 % of the surface is covered with buildings and their average height exceeds 15 m

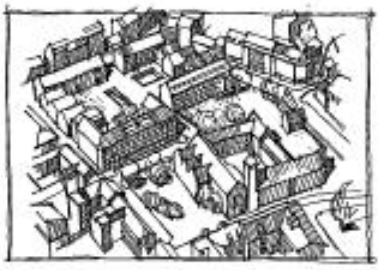

A.2 Transition between roughness categories 0, I, II, III and IV

(1) The transition between different roughness categories has to be considered when calculating q_p and $c_s c_d$.

NOTE The procedure to be used may be given in the National Annex. Two recommended procedures, Procedure 1 and Procedure 2, are given below.

Procedure 1

If the structure is situated near a change of terrain roughness at a distance:

- less than 2 km from the smoother category 0
- less than 1 km from the smoother categories I to III

the smoother terrain category in the upwind direction should be used

Small areas (less than 10 % of the area under consideration) with deviating roughness may be ignored.

Procedure 2

a) Determine the roughness categories for the upstream terrain in the angular sectors to be considered.

b) For every angular sector, determine the distance x from the building to the upstream roughness changes

c) If the distance x from the building to a terrain with lower roughness length is smaller than the values given in Table A.1, then the lower value for the roughness length should be used for the angular sector considered. If this distance x is larger than the value in Table A.2, the higher value for the roughness length should be used.

Small areas (less than 10 % of the area under consideration) with deviating roughness can be ignored.

Where no distance x is given in Table A.1 or for heights exceeding 50 m, the smaller roughness length should be used.

For intermediate values of height z, linear interpolation may be used.

A building in a certain terrain category may be calculated in a lower terrain category if it is situated within the distance limits defined in Table A.1

ONLY FOR REVIEW PURPOSE

Table A.1 — Distance x

Height z	I to II	I to III
5 m	0,50 km	5,00 km
7 m	1,00 km	10,00 km
10 m	2,00 km	20,00 km
15 m	5,00 km	
20 m	12,00 km	
30 m	20,00 km	
50 m	50,00 km	

Height z	II to III	II to IV
5 m	0,30 km	2,00 km
7 m	0,50 km	3,50 km
10 m	1,00 km	7,00 km
15 m	3,00 km	20,00 km
20 m	7,00 km	
30 m	10,00 km	
50 m	30,00 km	

Height z	III to IV
5 m	0,20 km
7 m	0,35 km
10 m	0,70 km
15 m	2,00 km
20 m	4,50 km
30 m	7,00 km
50 m	20,00 km

ONLY FOR REVIEW PURPOSE

A.3 Numerical calculation of orography coefficients

(1) At isolated hills and ridges or cliffs and escarpments different wind velocities occur dependent on the upstream slope Φ H/L_u in the wind direction, where the height H and the length L_u are defined in Figure A.1.

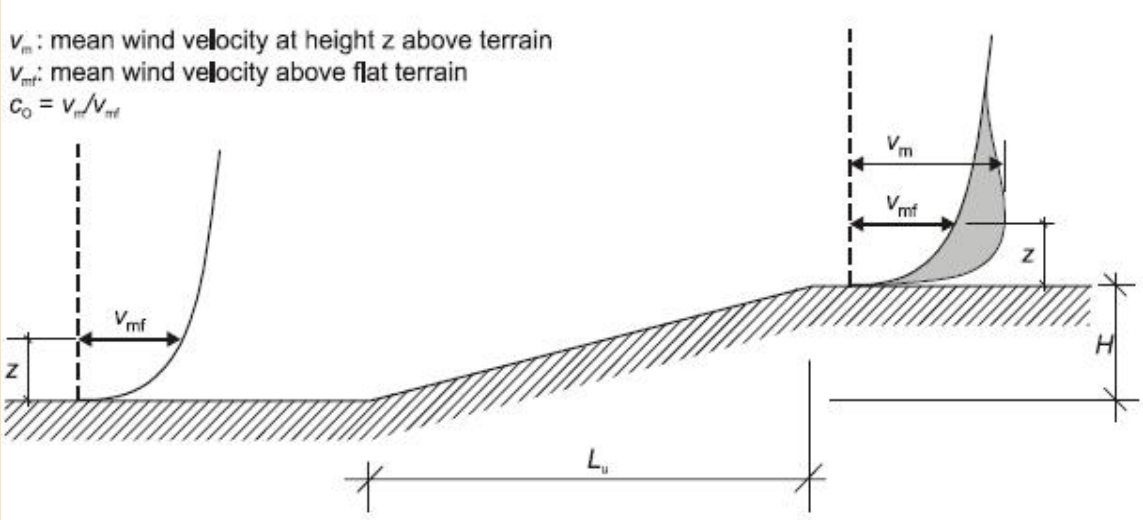

Figure A.1 — Illustration of increase of wind velocities over orography

ONLY FOR RE

(2) The largest increase of the wind velocities occurs near the top of the slope and is determined from the orography factor co, see Figure A.1. The slope has no significant effect on the standard deviation of the turbulence defined in 4.4 (1).

Note: The turbulence intensity will decrease with increasing wind velocity and equal value for the standard deviation

(3) The orography factor, $c_o(z)=v_m/v_{mf}$ accounts for the increase of mean wind speed over isolated hills and escarpments (not undulating and mountainous regions). It is related to the wind velocity at the base of the hill or escarpment. The effects of orography should be taken into account in the following situations:

a) For sites on upwind slopes of hills and ridges:
   - where $0.05 < \Phi \leq 0.3$ and $|x| \leq L_u/2$

b) For sites on downwind slopes of hills and ridges:
   - where $\Phi < 0.3$ and $x < Ld/2$
   - where $\Phi \geq 0.3$ and $x < 1.6\ H$

c) For sites on upwind slopes of cliffs and escarpments:
   - where $0.05 < \Phi \leq 0.3$ and $|x| \leq L_u/2$

d) For sites on downwind slopes of cliffs and escarpments:
   - where $\Phi < 0.3$ and $x < 1.5\ Le$
   - where $\Phi \geq 0.3$ and $x < 5\ H$

It is defined by:

$c_o = 1$ for $\Phi < 0{,}05$ (A.1)

$c_o = 1 + 2 \cdot s \cdot \Phi$ for $0{,}05 < \Phi < 0{,}3$ (A.2)

$c_o = 1 + 0{,}6 \cdot s$ for $\Phi > 0{,}3$ (A.3)

where:

s is the orographic location factor, to be obtained from Figure A.2 or Figure A.3 scaled to the length of the effective upwind slope length, Le

Φ is the upwind slope H/L_u in the wind direction (see Figure A.2 and Figure A.3) Le is the effective length of the upwind slope, defined in Table A.2

L_u is the actual length of the upwind slope in the wind direction

L_d is the actual length of the downwind slope in the wind direction

H is the effective height of the feature

x is the horizontal distance of the site from the top of the crest

z is the vertical distance from the ground level of the site

Table A.2 — Values of the effective length L_e.

Type of slope ($\Phi = H/L_u$)	
Shallow ($0.05 < \Phi < 0.3$)	**Shallow** ($0.05 < \Phi < 0.3$)
$L_e = L_u$	$L_e = L_u$

ONLY FOR REVIEW PURPOSE

NOTE The calculated graphs in Figures A.2 and A.3 exceed the area of application as defined above. The consideration of orographic effects beyond these boundaries is optional.

(4) In valleys, $c_o(z)$ may be set to 1.0 if no speed up due to funnelling effects is to be expected. For structures situated within, or for bridges spanning steep-sided valleys care should be taken to account for any increase of wind speed caused by funnelling.

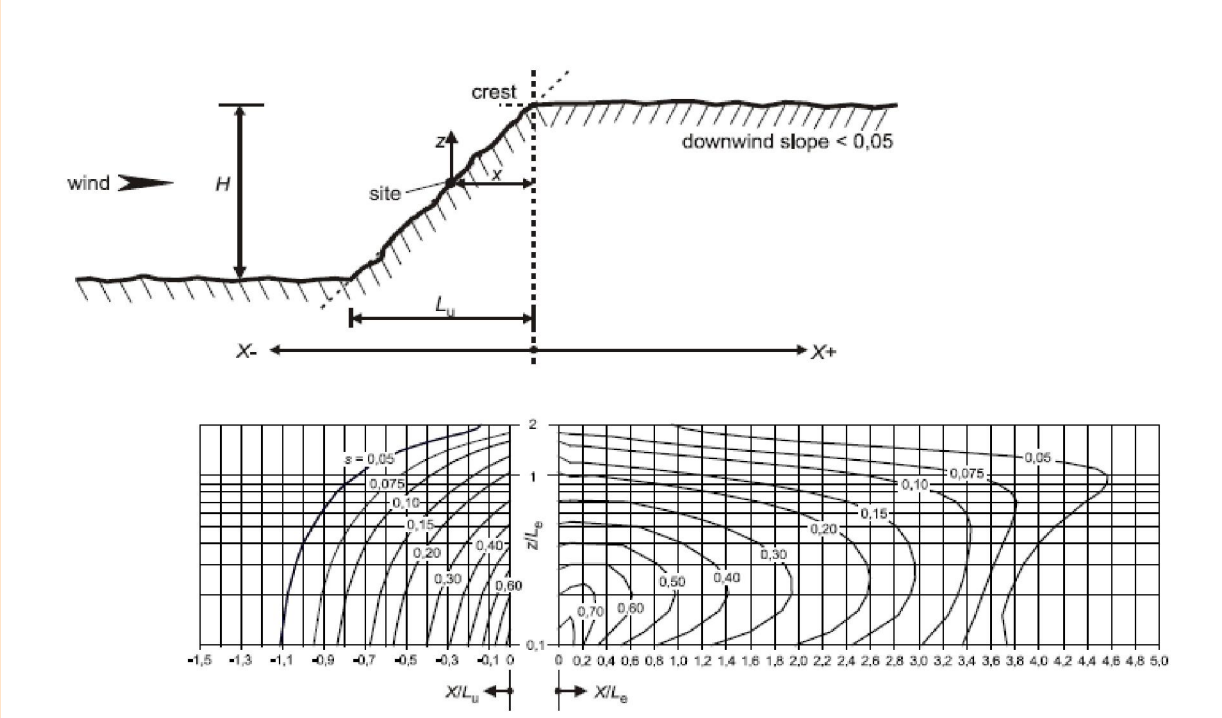

Figure A.2 — Factor *s* for cliffs and escarpments

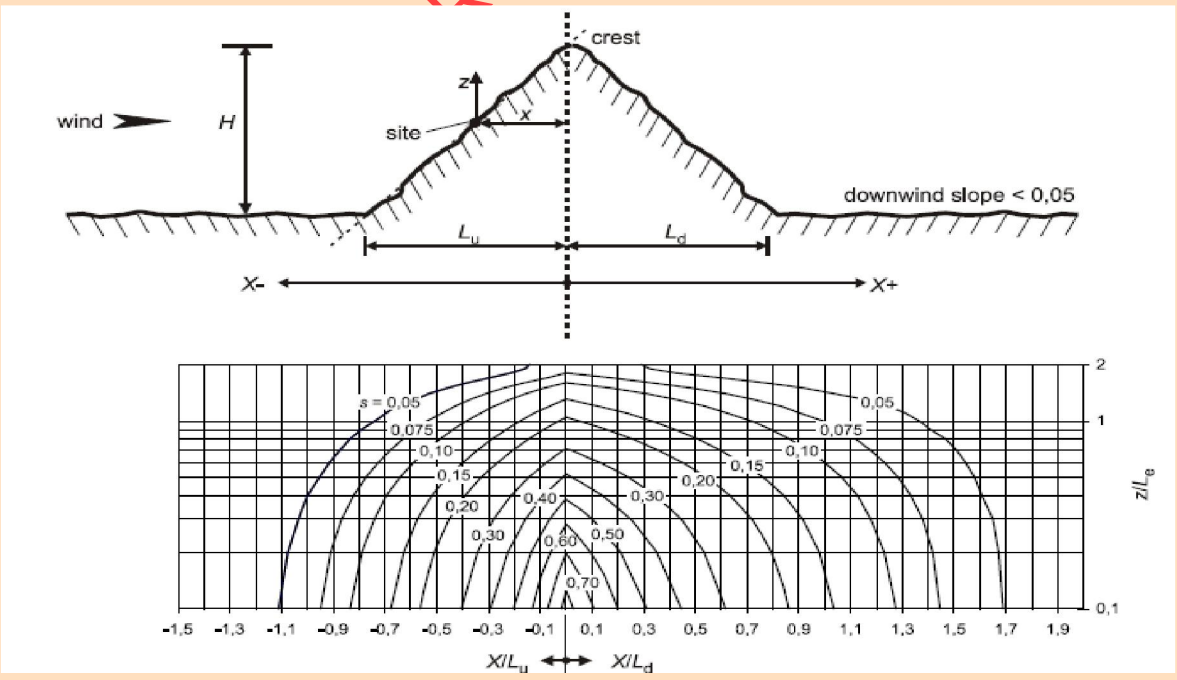

Figure A.3 — Factor *s* for hills and ridges

(5) Expressions A.4 to A.7 and A.11 may be used to compute the value of orographic location factor, s. As those expressions are empirical, it is most important that values of the parameters used must be restricted to the stated ranges, otherwise invalid values will be generated.

a) upwind section for all orography (Figures A.2 and A.3):

for the ranges

$$-1.5 \le \frac{x}{L_u} \le 0 \text{ and } 0 \le \frac{z}{L_e} \le 2.0$$

take:

$$s = A \cdot e^{\left(B\frac{x}{L_u}\right)} \qquad \text{(A.4)}$$

where

$$A = 0.1552 \cdot \left(\frac{z}{L_e}\right)^4 - 0.8575 \cdot \left(\frac{z}{L_e}\right)^3 + 1.8133 \cdot \left(\frac{z}{L_e}\right)^2 - 1.9115 \cdot \left(\frac{z}{L_e}\right) + 1.0124 \qquad \text{(A.5)}$$

and

$$B = 0.3542 \cdot \left(\frac{z}{L_e}\right)^2 - 1.0577 \cdot \left(\frac{z}{L_e}\right) + 2.6456 \qquad \text{(A.6)}$$

when

$$\frac{x}{L_u} < -1.5 \text{ or } \frac{z}{L_e} > 2$$

take:

$s = 0$

b) downwind section for cliffs and escarpments (Figure A.2):

For the ranges

$$0.1 \le \frac{x}{L_e} \le 3.5 \text{ and } 0.1 \le \frac{z}{L_e} \le 2.0$$

take:

ONLY FOR REVIEW PURPOSE

$$s = A \cdot \left(\log\left[\frac{x}{L_e}\right] \right)^2 + B \cdot \left(\log\left[\frac{x}{L_e}\right] \right) + C \qquad \text{(A.7)}$$

where

$$A = -1.3420 \cdot \left(\log\left[\frac{z}{L_e}\right] \right)^3 - 0.8222 \cdot \left(\log\left[\frac{z}{L_e}\right] \right)^2 + 0.4609 \cdot \log\left[\frac{z}{L_e}\right] - 0.0791 \qquad \text{(A.8)}$$

$$B = -1.0196 \cdot \left(\log\left[\frac{z}{L_e}\right] \right)^3 - 0.8910 \cdot \left(\log\left[\frac{z}{L_e}\right] \right)^2 + 0.5343 \cdot \log\left[\frac{z}{L_e}\right] - 0.1156 \qquad \text{(A.9)}$$

and

$$C = 0.8030 \cdot \left(\log\left[\frac{z}{L_e}\right] \right)^3 + 0.4236 \cdot \left(\log\left[\frac{z}{L_e}\right] \right)^2 - 0.5738 \cdot \log\left[\frac{z}{L_e}\right] + 0.1606 \qquad \text{(A.10)}$$

For the range

$$0 \le \frac{x}{L_e} \le 0.1$$

interpolate between values for

$\frac{x}{L_e} = 0$ ($s = A$ in Expression A.5) and $\frac{x}{L_e} = 0.1$.

when: $\frac{z}{L_e} < 0.1$ use the values for $\frac{z}{L_e} = 0.1$.

when: $\frac{X}{L_d} > 3.5$ or $\frac{z}{L_e} > 2.0$ take the value $s = 0$

c) downwind section for hills and ridges (Figure A.3):

For the ranges

$$0 \le \frac{x}{L_d} \le 2.0 \text{ and } 0 \le \frac{z}{L_e} \le 2.0$$

take:

$$s = A \cdot e^{\left(B\frac{x}{L_d}\right)} \qquad \text{(A.11)}$$

where

ONLY FOR REVIEW PURPOSE

$$A = 0.1552 \cdot \left(\frac{z}{L_e}\right)^4 - 0.8575 \cdot \left(\frac{z}{L_e}\right)^3 + 1.8133 \cdot \left(\frac{z}{L_e}\right)^2 - 1.9115 \cdot \left(\frac{z}{L_e}\right) + 1.0124 \quad \text{(A.12)}$$

and

$$B = -0.3056 \cdot \left(\frac{z}{L_e}\right)^2 + 1.0212 \cdot \left(\frac{z}{L_e}\right) - 1.7637 \quad \text{(A.13)}$$

when

$$\frac{x}{L_d} < 2.0 \quad \text{or} \quad \frac{z}{L_e} > 2.0$$

take:

$s = 0$

NOTE Expressions A.5 and A.12 are identical.

A.4 Neighbouring structures

(1) If a building is more than twice as high as the average height have of the neighbouring structures then, as a first approximation, the design of any of those nearby structures may be based on the peak velocity pressure at height z_n ($z_e = z_n$) above ground (Expression A.14), see Figure A.4.

$x \le r$: $\quad z_n = \frac{1}{2} \cdot r$

$r < x < 2 \cdot r$: $\quad z_n = \frac{1}{2}\left(r - (1 - \frac{2 \cdot h_{low}}{r}) \cdot (x - r)\right)$

(A.14)

$x \geq 2 \cdot r$: $\quad z_n = h_{low}$

in which the radius r is :

$r = h_{high}$ if $h_{high} \le 2 \cdot d_{large}$

$r = 2 \cdot d_{large}$ if $h_{high} > 2 \cdot d_{large}$

The structural height h_{low}, the radius r, the distance x and the dimensions d_{small} and d_{large} are illustrated in Figure A.4 Increased wind velocities can be disregarded when h_{low} is more than half the height $h_{high}$of the high building, i.e. $z_n = h_{low}$

ONLY FOR REVIEW PURPOSE

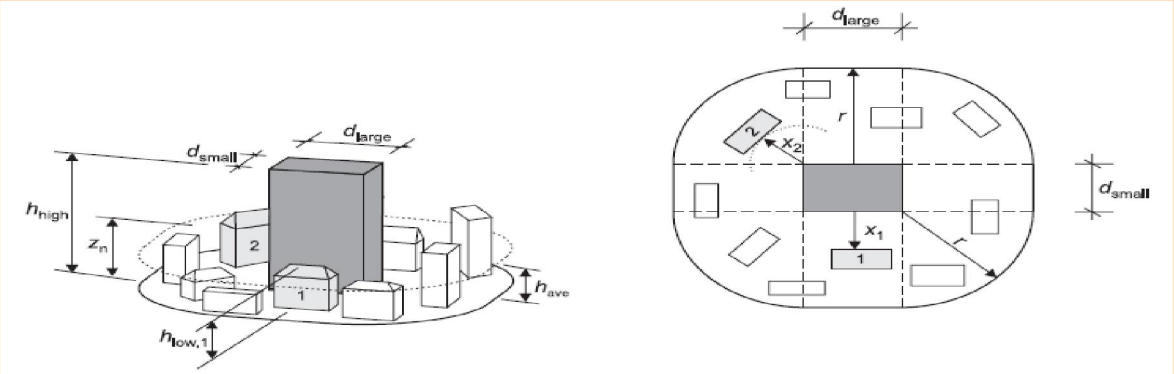

Figure A.4 — Influence of a high rise building, on two different nearby structures (1 and 2)

A.5 Displacement height

(1) For buildings in terrain category IV, closely spaced buildings and other obstructions causes the wind to behave as if the ground level was raised to a displacement height, h_{dis}. h_{dis} may be determined by Expression (A.15), see Figure A.5. The profile of peak velocity pressure over height (see Figure 4.2) may be lifted by a height h_{dis}. These rules are direction dependent, the values of h_{ave} and x should be established for each 30° sector as described in 4.3.2.

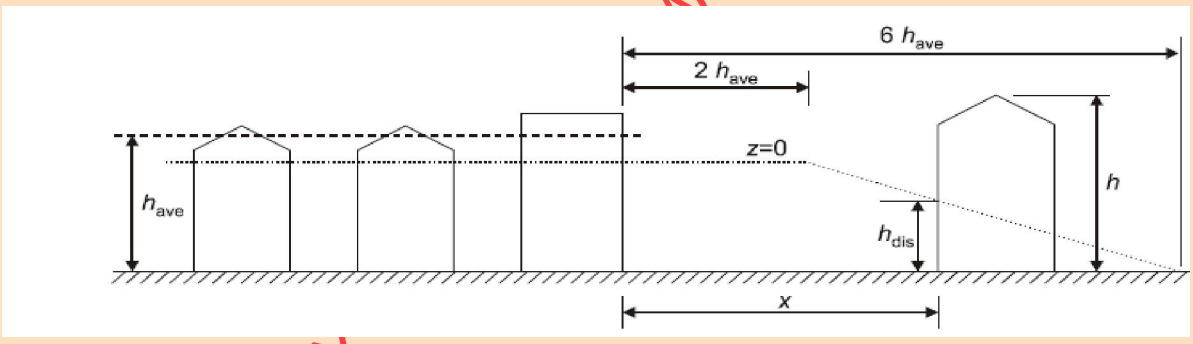

Figure A.5 — Obstruction height and upwind spacing

$x \leq 2 \cdot h_{ave}$ h_{dis} is the lesser of $0.8 \cdot h_{ave}$ or $0.6 \cdot h$

$2 \cdot h_{ave} < x < 6 \cdot h_{ave}$ h_{dis} is the lesser of $1.2 \cdot h_{ave} - 0.2 \cdot x$ or $0.6 \cdot h$ (A.15)

$X \geq 6 \cdot h_{ave}$ $h_{dis} = 0$

In the absence of more accurate information the obstruction height may be taken as have = 15 m for terrain category IV.

ONLY PURPOSE

These rules are direction dependent, the values of have and x should be established for each 30° sector as described in 4.3.2.

ANNEX B
(INFORMATIVE)
PROCEDURE 1 FOR DETERMINING THE STRUCTURAL FACTOR C_sC_D

B.1 Wind turbulence

(1) The turbulent length scale $L(z)$ represents the average gust size for natural winds. For heights z below 200 m the turbulent length scale may be calculated using Expression (B.1):

$$L(z) = L_t \cdot \left(\frac{z}{z_t}\right)^{\alpha} \quad \text{for} \quad z \geq z_{min}$$
$$L(z) = L(Z_{min}) \quad \text{for} \quad z < z_{min} \tag{B.1}$$

with a reference height of z_t = 200 m, a reference length scale of L_t = 300 m, and with $\alpha = 0{,}67 + 0{,}05 \ln(z_0)$, where the roughness length z_0 is in m. The minimum height z_{min} is given in Table 4.1.

(2) The wind distribution over frequencies is expressed by the non-dimensional power spectral density function $S_L(z,n)$, which should be determined using Expression (B.2):

$$S_L(z,n) = \frac{n \cdot S_v(z,n)}{\sigma_v^2} = \frac{6.8 \cdot f_L(z,n)}{(1+10.2 \cdot f_L(z,n))^{5/3}} \tag{B.2}$$

where $S_v(z,n)$ is the one-sided variance spectrum, and

$f_L(z,n) = \frac{n \cdot L(z)}{v_m(z)}$ is a non-dimensional frequency determined by the frequency n = $n_{1,x}$, the natural frequency of the structure in H_z, by the mean velocity $v_m(z)$ and the turbulence length scale L(z) defined in (B. 1). The power spectral density function is illustrated in Figure B.1.

ONLY FOR REVIEW PURPOSE

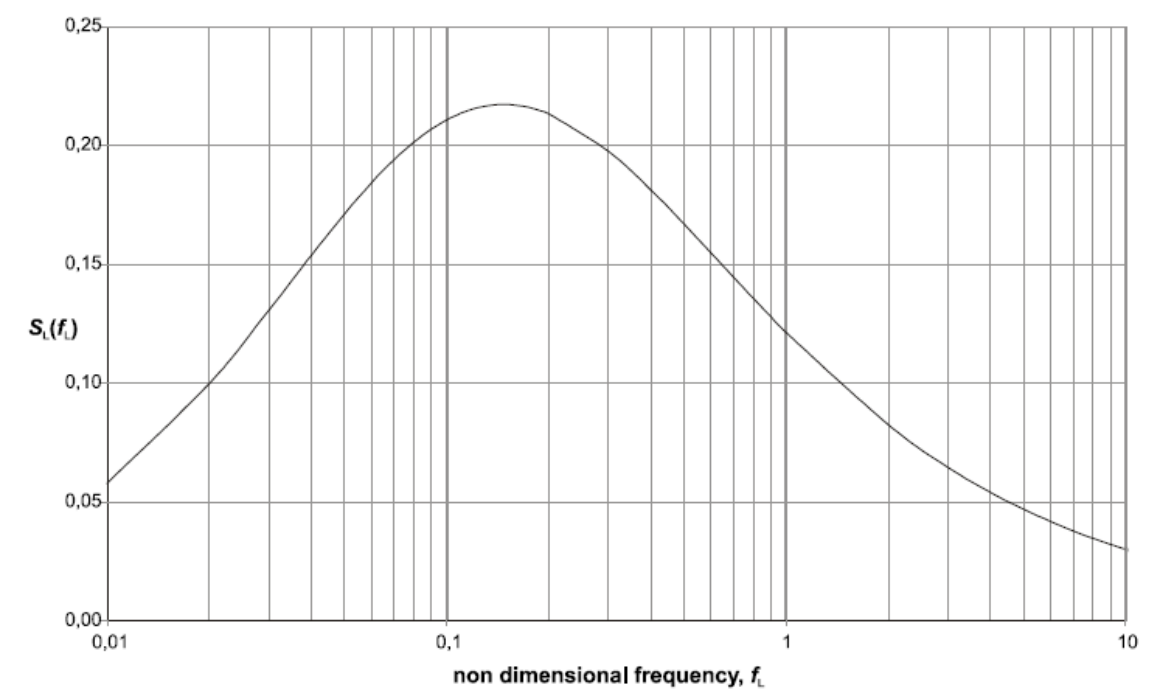

Figure B.1 —Power spectral density function $S_L(f_L)$

ONLY FOR RE

B.2 Structural factor $c_s c_d$

(1) The structural factor $c_s c_d$ is defined in 6.3.1.

(2) The background factor B^2 allowing for the lack of full correlation of the pressure on the structure surface may be calculated using Expression (B.3):

$$B^2 = \frac{1}{1 + 0.9 \cdot \left(\frac{b+h}{L(z_e)} \right)^{0.63}} \qquad \text{(B.3)}$$

where:

b, h is the width and height of the structure, see Figure 6.1.

$L(z_e)$ is the turbulent length scale given in B. 1 (1) at reference height z_e defined in Figure 6.1. It is on the safe side to use $B^2 = 1$.

(3) The peak factor k_p, defined as the ratio of the maximum value of the fluctuating part of the response to its standard deviation, should be obtained from Expression (B.4) and is shown in Figure B.2.

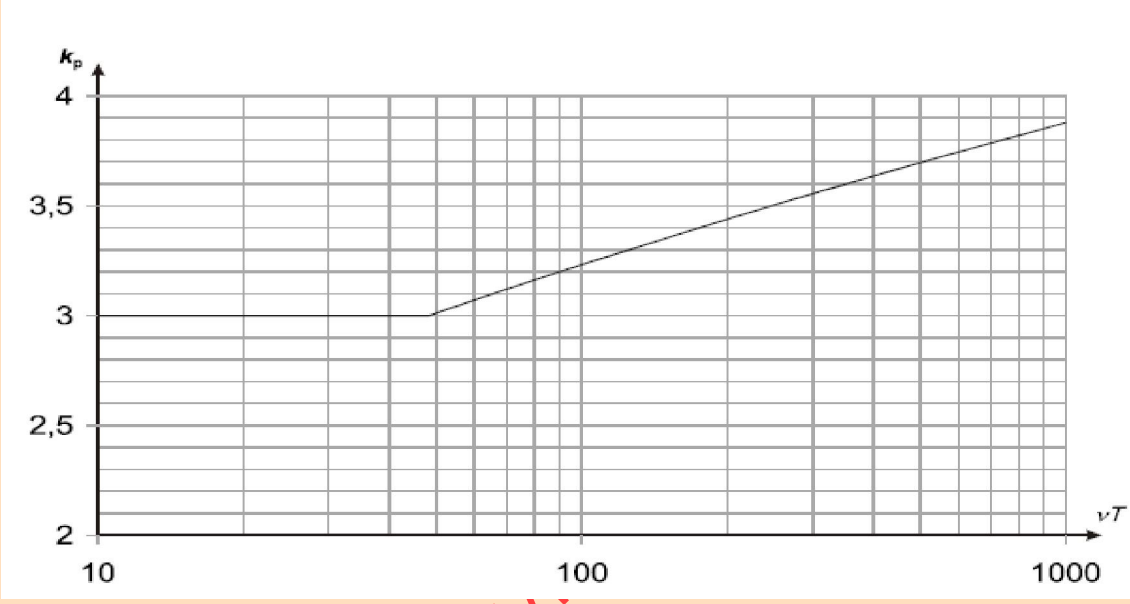

Figure B.2 —Peak factor

$$k_p = \sqrt{2 \cdot \ln(v \cdot T)} + \frac{0.6}{\sqrt{2 \cdot \ln(v \cdot T)}} \quad \text{or } k_p = 3 \text{ whichever is larger} \qquad \text{(B.4)}$$

where:
v is the up-crossing frequency given in (4)
T is the averaging time for the mean wind velocity, T = 600 seconds.

(4) The up-crossing frequency v should be obtained from Expression (B.5):

$$v = n_{1,x} \sqrt{\frac{R^2}{B^2 + R^2}} \quad ; \quad v \geq 0.08 Hz \qquad \text{(B.5)}$$

Where $n_{1,x}$ is the natural frequency of the structure, which may be determined using Annex F. The limit of $v \geq 0.08$ Hz corresponds to a peak factor of 3.0.

(5) The resonance response factor R^2 allowing for turbulence in resonance with the considered vibration mode of the structure should be determined using Expression (B.6):

ONLY FOR REV

$$R^2 = \frac{\pi^2}{2 \cdot \delta} \cdot S_L(z_e, n_{1,x}) \cdot R_h(\eta_h) \cdot R_b(\eta_b) \qquad \text{(B.6)}$$

where:

δ is the total logarithmic decrement of damping given in F.5

S_L is the non-dimensional power spectral density function given in B. 1 (2)

R_h, R_b is the aerodynamic admittance functions given in (6).

(6) The aerodynamic admittance functions R_h and R_b for a fundamental mode shape may be approximated using Expressions (B.7) and (B.8):

$$R_h = \frac{1}{\eta_h} - \frac{1}{2 \cdot \eta_h^2}(1 - e^{-2\eta_h}), \qquad R_h = 1 \quad for \quad \eta_h = 0 \qquad \text{(B.7)}$$

$$R_b = \frac{1}{\eta_b} - \frac{1}{2 \cdot \eta_b^2}(1 - e^{-2\eta_b}), \qquad R_b = 1 \quad for \quad \eta_b = 0 \qquad \text{(B.8)}$$

with: $\eta_h = \frac{4.6 \cdot h}{L(z_e)} \cdot f_L(z_e, n_{1,x})$ and $\eta_b = \frac{4.6 \cdot b}{L(z_e)} \cdot f_L(z_e, n_{1,x})$

NOTE For mode shapes with internal node points more detailed calculations should be used.

B.3 Number of loads for dynamic response

(1) Figure B.3 shows the number of times Ng, that the value ΔS of an effect of the wind is reached or exceeded during a period of 50 years. ΔS is expressed as a percentage of the value S_k, where S_k is the effect due to a 50 years return period wind action.

ONLY FOR REVIEW PURPOSE

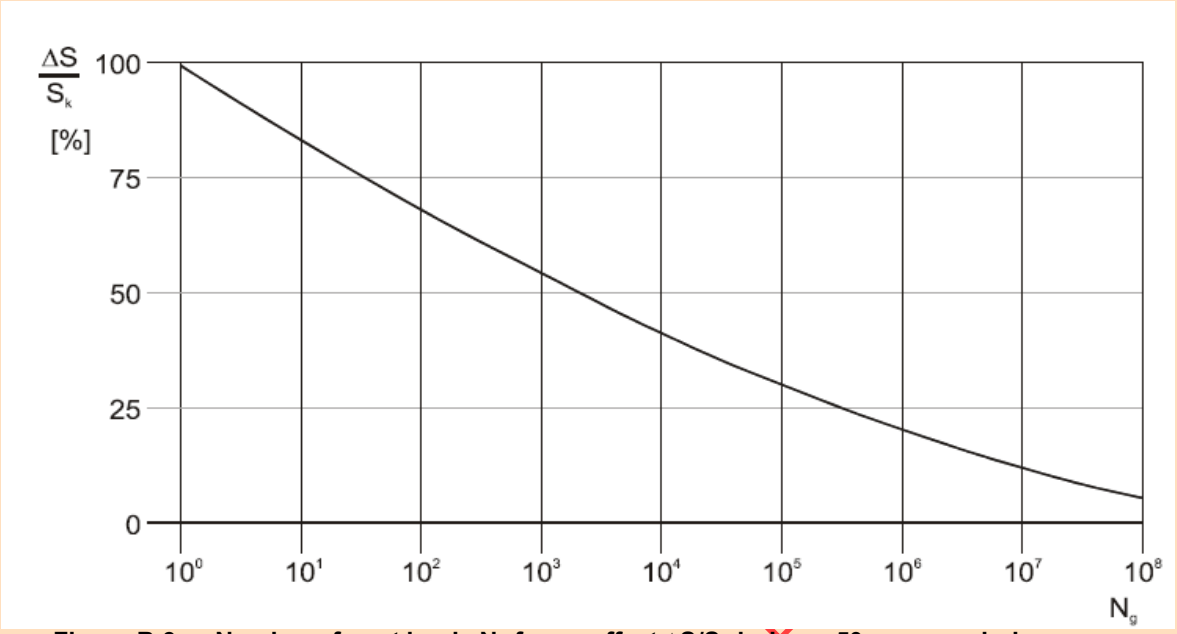

Figure B.3 — Number of gust loads N_g for an effect $\Delta S/S_k$ during a 50 years period

The relationship between $\Delta S/S_k$ and N_g is given by Expression B.9.

$$\frac{\Delta S}{S_k} = 0.7 \cdot \left(\log(N_g)\right)^2 - 17.4 \cdot \log(N_g) + 100 \qquad \text{(B.9)}$$

B.4 Service displacement and accelerations for serviceability assessments of a vertical structure

(1) The maximum along-wind displacement is determined from the equivalent static wind force defined in 5.3.

(2) The standard deviation $\sigma_{a,x}$ of the characteristic along-wind acceleration of the structural point at height z should be obtained using Expression (B.10) :

$$\sigma_{a,x}(z) = \frac{c_f \cdot \rho \cdot b \cdot I_v(z_e) \cdot v_m^2(z_e)}{m_{1,x}} \cdot R \cdot K_x \cdot \Phi_{1,x}(z) \qquad \text{(B.10)}$$

where:

c_f is the force coefficient, see Section 7

ρ is the air density, see 4.5 (1)

b is the width of the structure, defined in Figure 6.1

$I_v(z_e)$ is the turbulence intensity at the height $z = z_e$ above ground, see Figure 6.1 and 4.4

$v_m(z_e)$ is the mean wind velocity for $z = z_e$, see 4.3.1 (1)

ONLY FOR REVIEW PURP

R is the square root of resonant response, see B. 2 (5)

K_x is the non-dimensional coefficient, given by Expression (B.11)

$m_{1,x}$ is the along wind fundamental equivalent mass, see F.4 (1)

$n_{1,x}$ is the fundamental frequency of along wind vibration of the structure; approximations are given in Annex F

$\Phi_{1,x}(z)$ is the fundamental along wind modal shape, as a first approximation the expressions given in Annex F may be used

(3) The non dimensional coefficient, K_x, is defined by:

$$K_x = \frac{\int_0^h v_m^2(z)\Phi_{1,x}(z)\,dz}{v_m^2(z_e)\cdot\int_0^h \Phi_{1,x}^2(z)\,dz} \qquad \text{(B.11)}$$

where:

h is the height of the structure (see Figure 6.1).

NOTE Assuming $\Phi_{1,x}(z) = (z/h)^{\zeta}$ (see Annex F) and $c_o(z) = 1$ (flat terrain, see 4.3.3), Expression (B.11) can be approximated by Expression (B.12). This approximation is shown in Figure B.4

$$K_x = \frac{(2\cdot\zeta+1)\cdot\left\{(\zeta+1)\cdot\left[\ln\left(\frac{z_e}{z_o}\right)+0.5\right]-1\right\}}{(\zeta+1)^2\cdot\ln\left(\frac{z_e}{z_o}\right)} \qquad \text{(B.12)}$$

where:

z_0 is the roughness length (Table 4.1)

ζ is the exponent of the mode shape (see Annex F)

ONLY FOR REVIEW PURPOSE

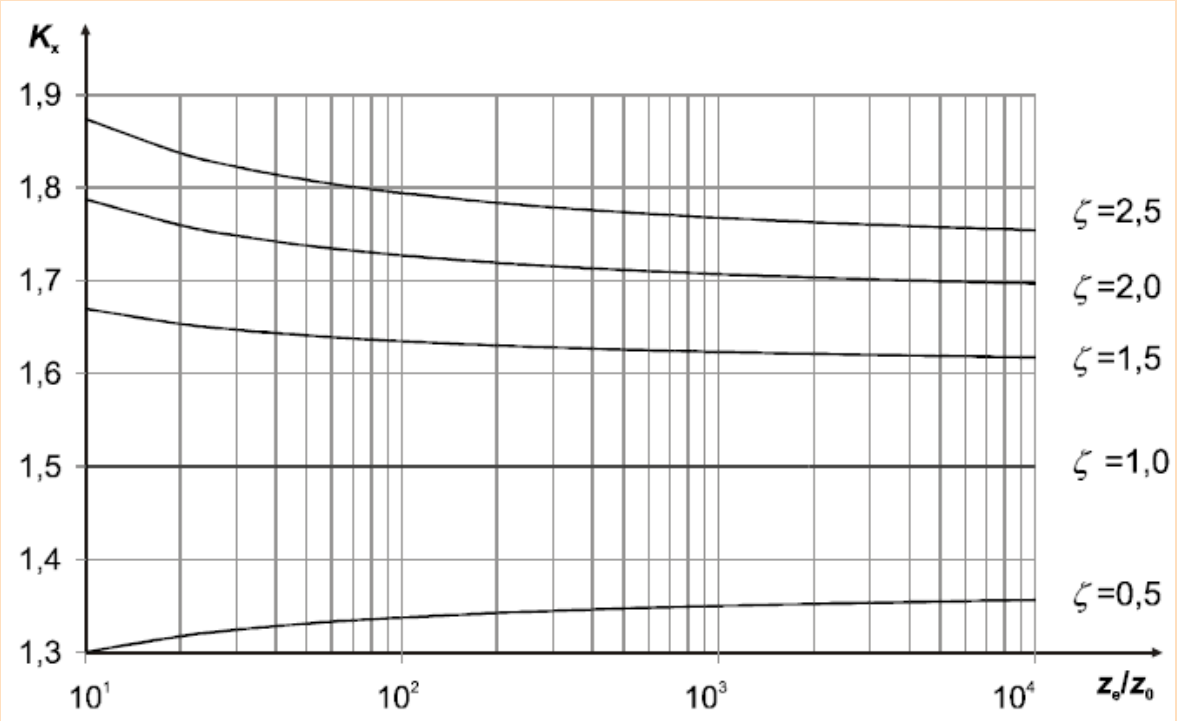

Figure B.4 — Approximation of the non dimensional coefficient, K_x according to Expression (B.12)

(4) The characteristic peak accelerations are obtained by multiplying the standard deviation in (2) by the peak factor in B. 2 (3) using the natural frequency as upcrossing frequency, i.e. $v = n_{1,x}$.

ONLY FOR REVIEW P

ANNEX C
(INFORMATIVE)
PROCEDURE 2 FOR DETERMINING THE STRUCTURAL FACTOR C_sC_D

C.1 Wind turbulence

(1) The turbulence should be considered in accordance with B.1.

C.2 Structural factor

(1) The structural factor c_sc_d is defined in 6.3.1.

(2) The background factor B^2 allowing for the lack of full correlation of the pressure on the structure surface may be calculated using Expression (C.1):

$$B^2 = \frac{1}{1 + \frac{3}{2} \cdot \sqrt{\left(\frac{b}{L(z_e)}\right)^2 + \left(\frac{h}{L(z_e)}\right)^2 + \left(\frac{b}{L(z_e)} \cdot \frac{h}{L(z_e)}\right)^2}} \quad \text{(C.1)}$$

where:

b,h is the width and height of the structure, see Figure 6.1

$L(z_e)$ is the turbulent length scale given in B.1. (1) at reference height $z_e$defined in Figure 6.1. It is on the safe side to use $B^2 = 1$.

(3) The peak factor k_p, should be obtained from B. 2 (3).

(4) The resonance response factor R^2 allowing for turbulence in resonance with the considered vibration mode of the structure should be determined using Expression (C.2):

$$R^2 = \frac{\pi^2}{2 \cdot \delta} \cdot S_L(z_e, n_{1,x}) \cdot K_s(n_{1,x}) \quad \text{(C.2)}$$

where:

δ is the total logarithmic decrement of damping given in Annex F

S_L is the wind power spectral density function given in B. 1 (2)

$n_{1,x}$ is the natural frequency of the structure, which may be determined using Annex F

K_s is the size reduction function given in (5).

$$K_s(n) = \frac{1}{1 + \sqrt{(G_y \cdot \phi_y)^2 + (G_z \cdot \phi_z)^2 + \left(\frac{2}{\pi} \cdot G_y \cdot \phi_y \cdot G_z \cdot \phi_z\right)^2}} \quad \text{(C.3)}$$

$$\phi_y = \frac{c_y \cdot b \cdot n}{v_m(z_e)} \qquad \phi_z = \frac{c_z \cdot h \cdot n}{v_m(z_e)}$$

The constants G_y and G_z depend on the mode shape variation along the horizontal y-axis and vertical z-axis, respectively. The decay constants c_y and c_z are both equal to 11,5.

(6) The constant G introduced in (5) and the constant K used to calculate

ONLY FOR REVIEW PURPOSE

accelerations, are shown in Table C.1.

Table C.1 — G and K as a function of mode shape

Mode shape	Uniform	Linear	Parabolic	Sinusoidal
G:	1/2	3/8	5/18	$4/\pi^2$
K:	1	3/2	5/3	$4/\pi$

NOTE 1 For buildings with a uniform horizontal mode shape variation and a linear vertical mode shape variation $\Phi(y,z) = z/h$, $G_y = 1/2$, $G_z = 3/8$, $K_y = 1$ and $K_z = 3/2$.

NOTE 2 For chimneys with a uniform horizontal mode shape variation and a parabolic vertical mode shape variation $\Phi(y,z) = z^2/h^2$, $G_y = 1/2$, $G_z = 5/18$, $K_y = 1$ and $K_z = 5/3$.

NOTE 3 For bridges with a sinusoidal horizontal mode shape variation $\Phi(y,z) = \sin(\pi \cdot y/b)$, $G_y = 4/\pi^2$, $G_z = 1/2$, $K_y = 4/\pi$ and $K_z = 1$.

C.3 Number of loads for dynamic response

(1) The number of loads should be obtained from B. 3.

C.4 Service displacement and accelerations for serviceability assessments

(1) The maximum along-wind displacement is the static displacement determined from the equivalent static wind force defined in 5.3.

(2) The standard deviation $\sigma_{a,x}$ of the characteristic along-wind acceleration of the structural point with coordinates (y,z) is approximately given by Expression (C.4):

$$\sigma_{a,x}(y,z) = c_f \cdot \rho \cdot I_v(z_e) \cdot v_m^2(z_e) \cdot R \cdot \frac{K_y \cdot K_z \cdot \phi(y,z)}{\mu_{ref} \cdot \phi_{max}} \qquad (C.4)$$

where:

c_f is the force coefficient, see Section 7

ρ is the air density, see 4.5

$I_v(z_e)$ is the turbulence intensity at height z_e above ground, see 4.4 (1)

$v_m(z_e)$ is the characteristic mean wind velocity at height z_e, see 4.3.1 (1)

R is the square root of the resonant response, see C.2 (4)

K_y, K_z is the constants given in C.2 (6)

μ_{ref} is the reference mass per unit area, see F.5 (3)

ONLY FOR REVIEW PURPOSE

$\Phi(y,z)$ is the mode shape

Φ_{max} is the mode shape value at the point with maximum amplitude

(3) The characteristic peak accelerations are obtained by multiplying the standard deviation in (2) by the peak factor in B. 2 (3) using the natural frequency as upcrossing frequency, i.e. $\nu=n_{1,x}$.

ONLY FOR REVIEW PURPOSE

ANNEX D
(INFORMATIVE)
C_SC_D VALUES FOR DIFFERENT TYPES OF STRUCTURES

(1)The natural frequencies and mode shapes of the structures presented in this annex are derived from linear analysis or estimated using the expressions given in Annex F.

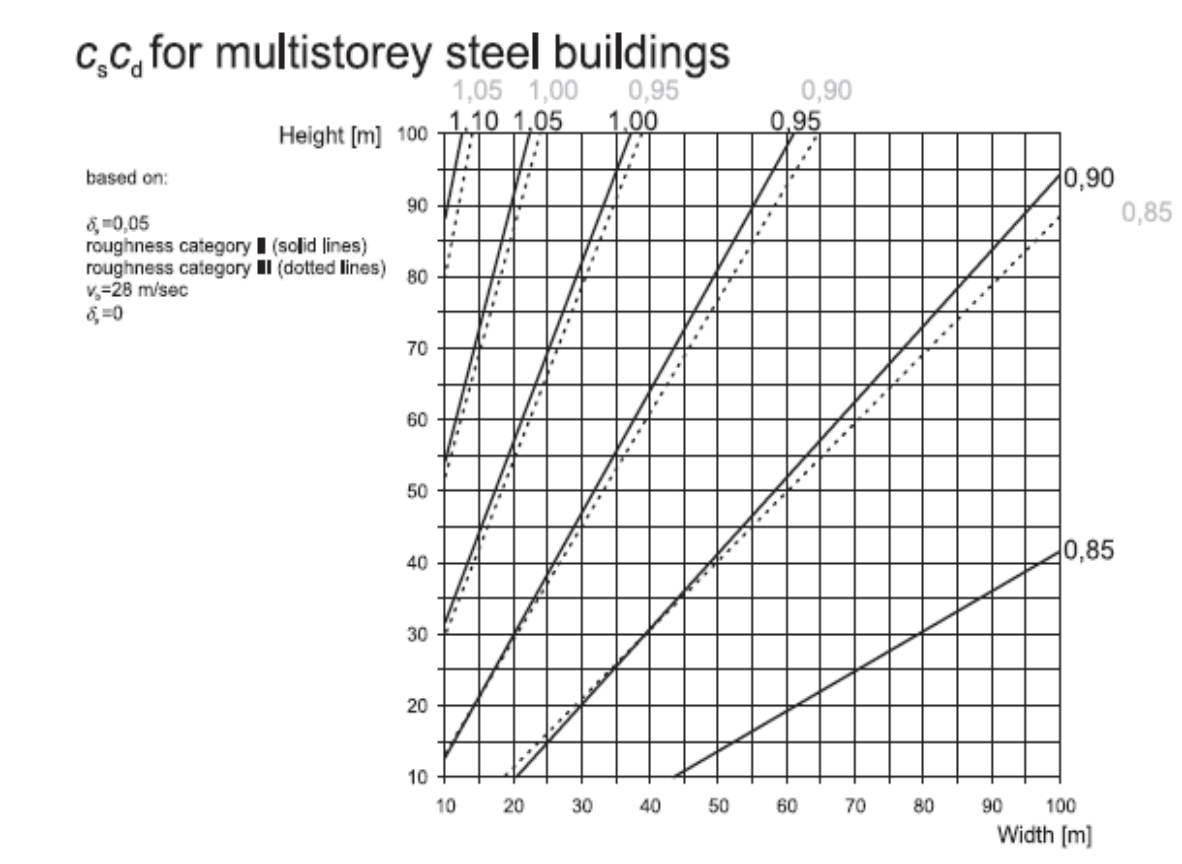

Note: For values exceeding 1.1 the detailed procedure given in 6.3 may be applied (approved minimum value of c_sc_d= 0.85)

Figure D.1 — c_sc_d for multistorey steel buildings with rectangular ground plan and vertical external walls, with regular distribution of stiffness and mass (frequency according to Expression (F.2)).

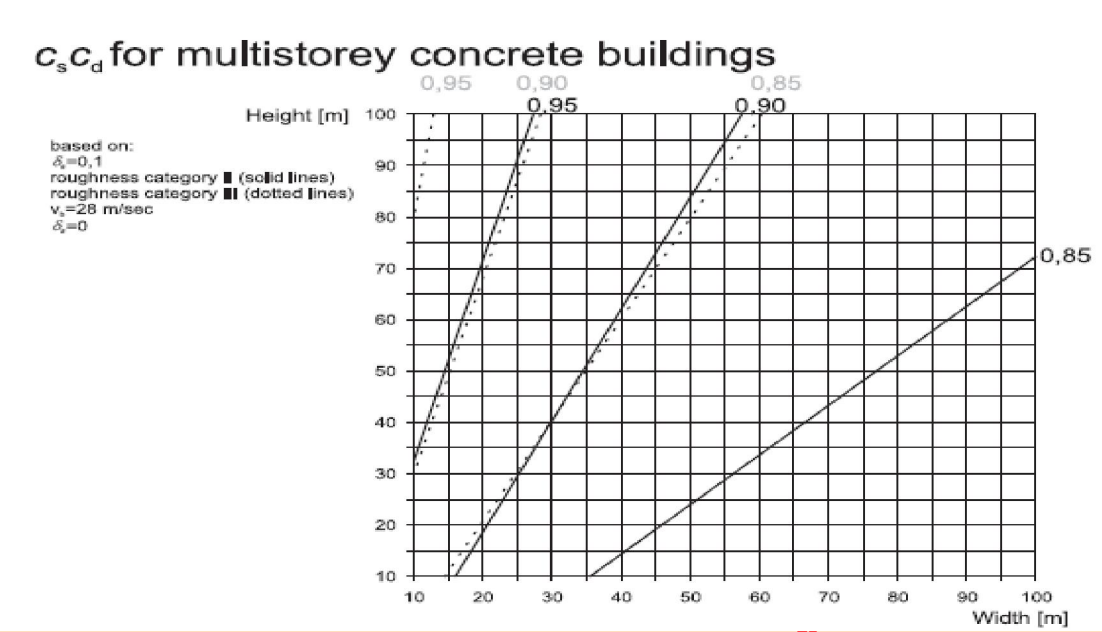

Note: For values exceeding 1.1 the detailed procedure given in 6.3 may be applied (approved minimum value of $c_s c_d$= 0.85)

Figure D.2 — $c_s c_d$ for multistorey concrete buildings with rectangular ground plan and vertical external walls, with regular distribution of stiffness and mass (frequency according to Expression (F.2)).

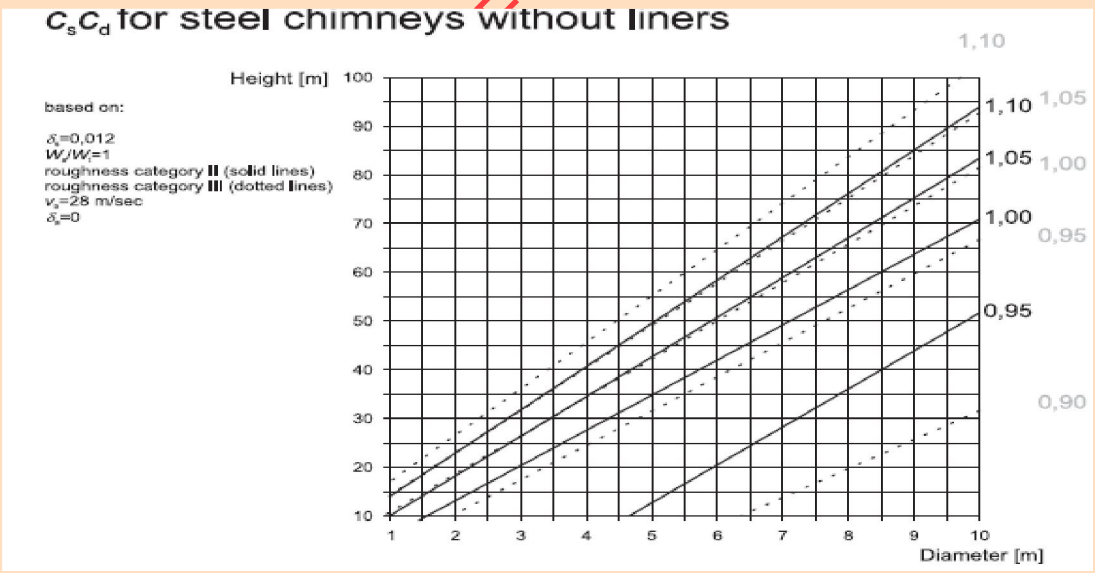

NOTE For values exceeding 1.1 the detailed procedure given in 6.3 may be applied (approved minimum value of $c_s c_d$= 0,85)

Figure D.3 — $c_s c_d$ for steel chimneys without liners (frequency according to Expression (F.3), with ε_1=1000 and W_s/W_t=1,0).

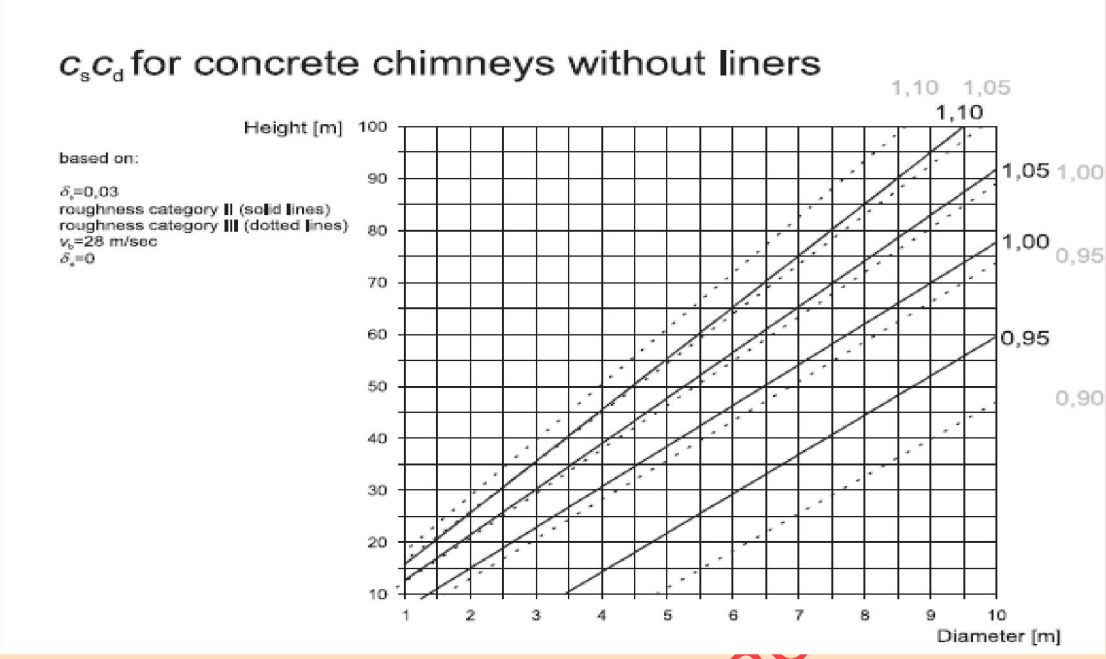

NOTE For values exceeding 1.1 the detailed procedure given in 6.3 may be applied (approved minimum value of $c_s c_d$= 0.85)

Figure D.4 — $c_s c_d$ for concrete chimneys without liners (frequency according to Expression (F.3), with ε_1=700 and W_s/W_t=1,0).

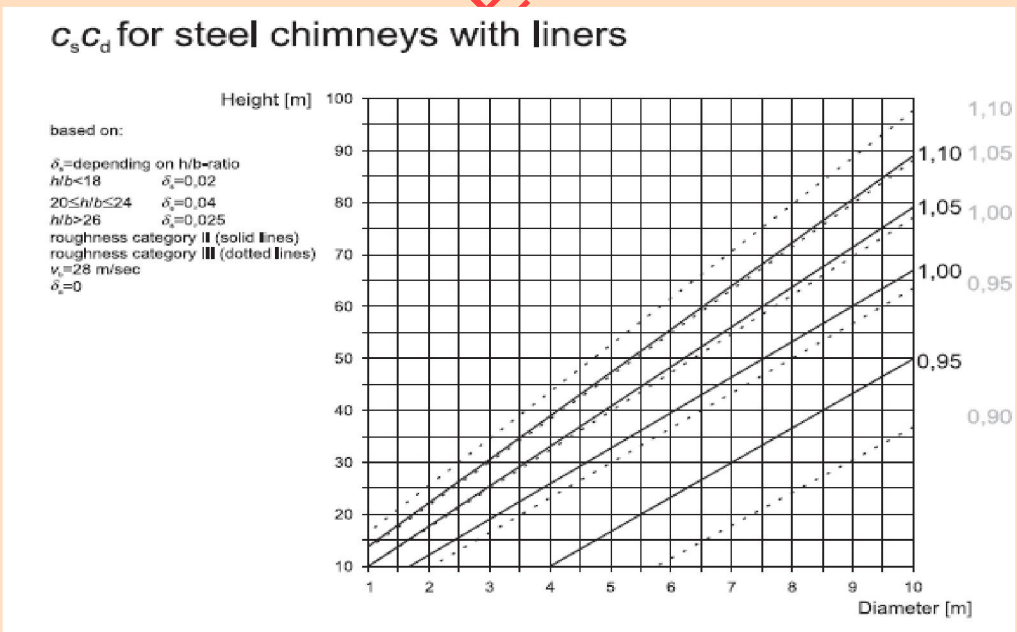

NOTE For values exceeding 1.1 the detailed procedure given in 6.3 may be applied (approved minimum value of $c_s c_d$= 0.85)

Figure D.5 — $c_s c_d$ for steel chimneys with liners and different values of δ_s according to Table F.2 (frequency according to Expression (F.3), with ε_1=1000 and W_s/W_t=0,5).

ANNEX E
(INFORMATIVE)
VORTEX SHEDDING AND AEROELASTIC INSTABILITIES

E.1 Vortex shedding

E.1.1 General

(1) Vortex-shedding occurs when vortices are shed alternately from opposite sides of the structure. This gives rise to a fluctuating load perpendicular to the wind direction. Structural vibrations may occur if the frequency of vortex– shedding is the same as a natural frequency of the structure. This condition occurs when the wind velocity is equal to the critical wind velocity defined in E.1.3.1. Typically, the critical wind velocity is a frequent wind velocity indicating that fatigue, and thereby the number of load cycles, may become relevant.

(2) The response induced by vortex shedding is composed of broad-banded response that occurs whether or not the structure is moving, and narrow-banded response originating from motion-induced wind load.

NOTE 1 Broad-banded response is normally most important for reinforced concrete structures and heavy steel structures.

NOTE 2 Narrow-banded response is normally most important for light steel structures.

E.1.2 Criteria for vortex shedding

(1) The effect of vortex shedding should be investigated when the ratio of the largest to the smallest crosswind dimension of the structure, both taken in the plane perpendicular to the wind, exceeds 6.

(2) The effect of vortex shedding need not be investigated when

$$v_{crit,i} > 1.25 \cdot v_m \qquad \text{(E.1)}$$

where:
$v_{crit,i}$ is the critical wind velocity for mode *i*, as defined in E.1.3.1
v_m is the characteristic 10 minutes mean wind velocity specified in 4.3.1 (1) at the cross section where vortex shedding occurs (see Figure E.3).

E.1.3 Basic parameters for vortex shedding

E.1.3.1 Critical wind velocity $v_{crit,i}$

(1) The critical wind velocity for bending vibration mode *i* is defined as the wind velocity at which the frequency of vortex shedding equals the natural frequency (mode i) of the structure or the structural and is given in Expression (E.2).

$$v_{crit,i} = \frac{b \cdot n_{i,y}}{St} \qquad \text{(E.2)}$$

where:

ONLY FOR REVIEW PURPOSE

b is the reference width of the cross-section at which resonant vortex shedding occurs and where the modal deflection is maximum for the structure or structural part considered; for circular cylinders the reference width is the outer diameter

$n_{i,y}$ is the natural frequency of the considered flexural mode i of cross-wind vibration; approximations for $n_{1,y}$ are given in F.2

St Strouhal number as defined in E.1.3.2.

(2) The critical wind velocity for ovalling vibration mode *i* of cylindrical shells is defined as the wind velocity at which two times of the frequency of vortex shedding equals a natural frequency of the ovalling mode *i* of the cylindrical shell and is given in Expression (E.3).

$$v_{crit,i} = \frac{b \cdot n_{i,o}}{2 \cdot St} \qquad \text{(E.3)}$$

where:

b is the outer shell diameter

St is the Strouhal number as defined in E.1.3.2

$n_{i,o}$ is the natural frequency of the ovalling mode *i* of the shell .

NOTE 1 For shells without stiffening rings n_0 is given in F.2 (3)

NOTE 2 Procedures to calculate ovalling vibrations are not covered in Annex E.

E.1.3.2 Strouhal number St

The Strouhal number St for different cross-sections may be taken from Table E.1

ONLY FOR REVIEW PURPOSE

Cross-section		*St*
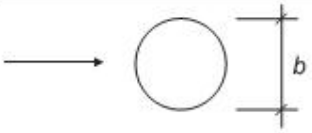 for all *Re*-numbers		0,18
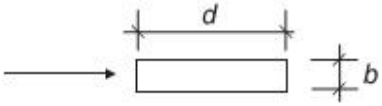 $0,5 \le d/b \le 10$		from Figure E.1
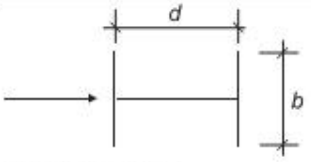 linear interpolation	$d/b = 1$ $d/b = 1,5$ $d/b = 2$	0,11 0,10 0,14
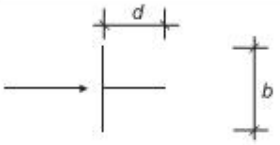 linear interpolation	$d/b = 1$ $d/b = 2$	0,13 0,08
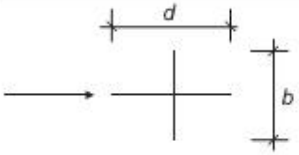 linear interpolation	$d/b = 1$ $d/b = 2$	0,16 0,12
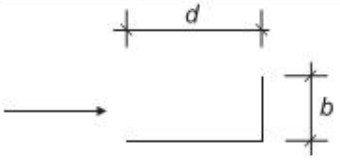 linear interpolation	$d/b = 1,3$ $d/b = 2,0$	0,11 0,07
NOTE Extrapolations for Strouhal numbers as function of d/b are not allowed.		

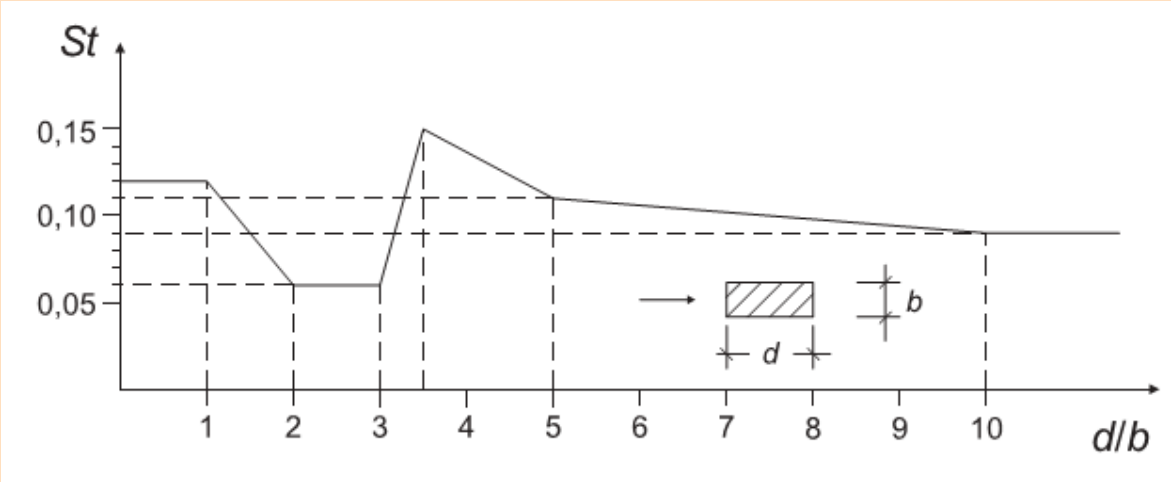

Figure E.1 — Strouhal number (St) for rectangular cross-sections with sharp corners

ONLY FOR REVIEW PURPOSE

E.1.3.3 Scruton number Sc

(1) The susceptibility of vibrations depends on the structural damping and the ratio of structural mass to fluid mass. This is expressed by the Scruton number Sc, which is given in Expression (E.4).

$$Sc = \frac{2 \cdot \delta_s \cdot m_{i,e}}{\rho \cdot b^2} \qquad \text{(E.4)}$$

where:

δ_s is the structural damping expressed by the logarithmic decrement.

ρ is the air density under vortex shedding conditions.

$m_{i,e}$ is the equivalent mass me per unit length for mode ias defined in F.4 (1)

b is the reference width of the cross-section at which resonant vortex shedding occurs

NOTE The value of the air density ρ may be given in the National Annex. The recommended value is 1,25 kg/m^3.

E.1.3.4 Reynolds number Re

(1) The vortex shedding action on a circular cylinder depends on the Reynolds number Re at the critical wind velocity $v_{crit,i}$. The Reynolds number is given in Expression (E.5).

$$\mathrm{Re}(v_{crit,i}) = \frac{b \cdot v_{crit,i}}{\nu} \qquad \text{(E.5)}$$

where:

b is the outer diameter of the circular cylinder

v is the kinematic viscosity of the air ($v \approx 15 \cdot 10^{-6}$ m^2/s)

$v_{crit,i}$ is the critical wind velocity, see E.1.3.1

E.1.4 Vortex shedding action

(1) The effect of vibrations induced by vortex shedding should be calculated from the effect of the inertia force per unit length $F_w(s)$, acting perpendicular to the wind direction at location s on the structure and given in Expression (E.6)

$$F_w(S) = m(S) \cdot (2 \cdot \pi \cdot n_{i,y})^2 \cdot \Phi_{i,y}(s) \cdot y_{F,max} \quad \text{(E.6)}$$

where:

$m(s)$ is the vibrating mass of the structure per unit length [kg/m]

$n_{i,y}$ is the natural frequency of the structure

$\Phi_{i,y}(s)$ is the mode shape of the structure normalised to 1 at the point with the maximum displacement

$y_{F,max}$ is the maximum displacement over time of the point with $\Phi_{i,y}(s)$ equal to 1, see E.1.5

E.1.5 Calculation of the cross wind amplitude

E.1.5.1 General

(1) Two different approaches for calculating the vortex excited cross-wind amplitudes are given in E.1.5.2 and E.1.5.3.

NOTE 1 The choice of calculation approach or alternative calculation procedures may be specified in the National Annex.

NOTE 2 A direct comparison of the approaches proposed in E.1.5.2 and E.1.5.3 is not possible because some of the input parameters are chosen for different environmental conditions. The National Annex may define the range of application for each of the approaches proposed.

NOTE 3 Mixing of the approaches E.1.5.2 and E.1.5.3 is not allowed, except if it is specifically stated in the text.

(2) The approach given in E.1.5.2 can be used for various kind of structures and mode shapes. It includes turbulence and roughness effects and it may be used for normal climatic conditions.

(3) The approach given in E.1.5.3 may be used to calculate the response for vibrations in the first mode of cantilevered structures with a regular distribution of cross wind dimensions along the main axis of the structure. Typically structures covered are chimneys or masts. It cannot be applied for grouped or in-line arrangements and for coupled cylinders. This approach allows for the consideration of different turbulence intensities, which may differ due to meteorological conditions. For regions where it is likely that it may become very cold

ONLY FOR REVIEW PURPOSE

and stratified flow conditions may occur (e.g. in coastal areas in Northern Europe), approach E.1.5.3 may be used.

NOTE The National Annex may give the regions where very cold and stratified flow conditions may occur. For these regions the approach 2 in E.1.5.3 is more appropriate, and the National Annex may define appropriate input parameters (like Ka or turbulence intensity) which should be used in this approach.

E.1.5.2 Approach 1 for the calculation of the cross wind amplitudes

E.1.5.2.1 Calculation of displacements

The largest displacement $y_{F,max}$ can be calculated using Expression (E.7).

$$\frac{y_{F,\max}}{b} = \frac{1}{St^2} \cdot \frac{1}{Sc} \cdot K \cdot K_w \cdot c_{\text{lat}} \qquad \text{(E.7)}$$

where:

St is the Strouhal number given in Table E.1

Sc is the Scruton number given in E.1.3.3

K_W is the effective correlation length factor given in E.1.5.2.4

K is the mode shape factor given in E.1.5.2.5

c_{lat} is the lateral force coefficient given in Table E.2

NOTE The aeroelastic forces are taken into account by the effective correlation length factor K_W.

E.1.5.2.2 Lateral force coefficient c_{lat}

(1) The basic value, $c_{lat,0}$, of the lateral force coefficient is given in Table E.2.

ONLY FOR REVIEW PURPOSE

Table E.2 — Basic value of the lateral force coefficient $c_{lat,0}$ for different cross- sections

Cross-section		$c_{lat,0}$
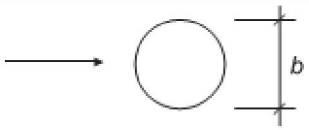 for all *Re*-numbers		from Figure E.2
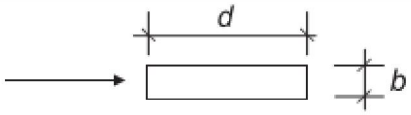 $0,5 \le d/b \le 10$		1,1
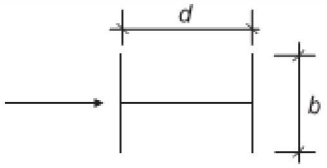 linear interpolation	$d/b = 1$ $d/b = 1,5$ $d/b = 2$	0,8 1,2 0,3
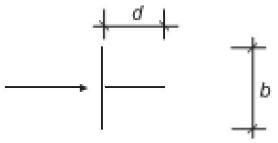 linear interpolation	$d/b = 1$ $d/b = 2$	1,6 2,3
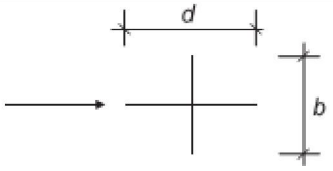 linear interpolation	$d/b = 1$ $d/b = 2$	1,4 1,1
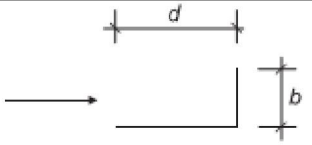 linear interpolation	$d/b = 1,3$ $d/b = 2,0$	0,8 1,0
NOTE Extrapolations for lateral force coefficients as function of d/b are not allowed.		

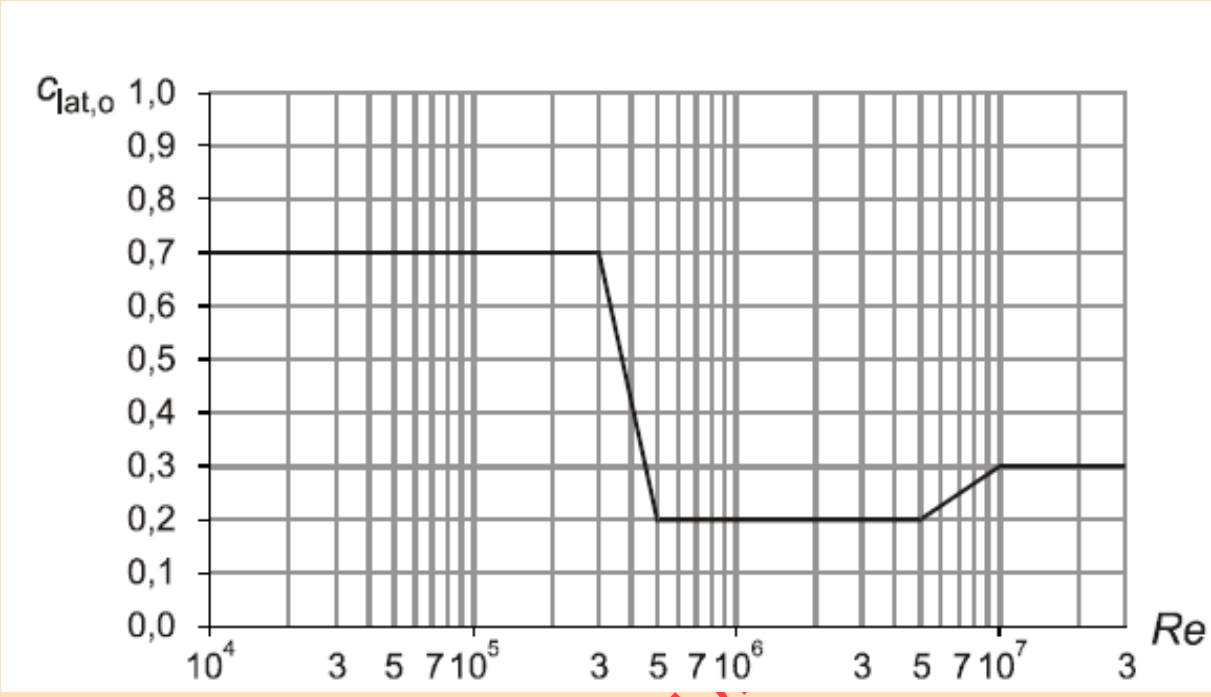

Figure E.2 — Basic value of the lateral force coefficient $c_{lat,0}$ versus Reynolds number Re($v_{crit,i}$) for circular cylinders, see E.1.3.4

Table E.3 — Lateral force coefficient c_{lat} versus critical wind velocity ratio, $v_{crit,i}/v_{m,Lj}$:

Critical wind velocity ratio	c_{lat}
$\frac{v_{crit,j}}{v_{m,Lj}} \leq 0.83$	$c_{lat} = c_{lat,0}$
$0.83 \leq \frac{v_{crit,j}}{v_{m,Lj}} < 1.25$	$c_{lat} = \left(3 - 2.4\frac{v_{crit,j}}{v_{m,Lj}}\right) \cdot c_{lat,o}$
$1.25 \leq \frac{v_{crit,j}}{v_{m,Lj}}$	$c_{lat} = c_{lat,0}$

where:

$c_{lat,0}$ is the basic value of c_{lat} as given in Table E.2 and, for circular cylinders, in Figure E.2

$v_{crit,j}$ is the critical wind velocity (see E.1.3.1)

$v_{mL,j}$ is the mean wind velocity (see 4.3.1) in the centre of the effective correlation length as defined in Figure E.3

ONLY FOR REVIEW PU

E.1.5.2.3 Correlation length L

(1) The correlation length L_j, should be positioned in the range of antinodes. Examples are given in Figure E.3. For guyed masts and continuous multispan bridges special advice is necessary.

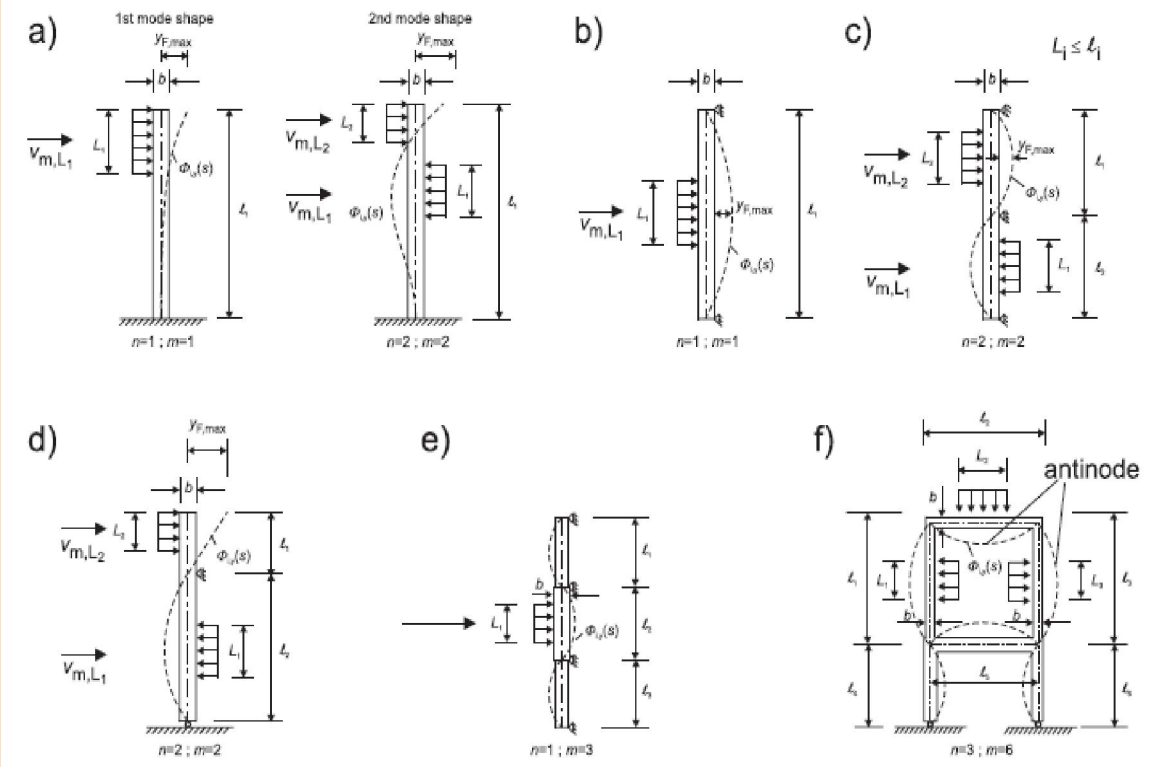

Note: If more than one correlation length is shown, it is safe to use them simultaneously, and the highest value of C_{lat} should be used.

Figure E.3 — Examples for application of the correlation length L_j(j = 1, 2, 3)

Table E.4 — Effective correlation length L_j as a function of vibration amplitude $y_F(s_j)$

$y_F(s_j)/b$	L_j / b
< 0.1	6
0.1 to 0.6	$4.8+12\cdot\frac{y_F(s_j)}{b}$
> 0.6	12

ONLY FO

E.1.5.2.4 Effective correlation length factor KW

(1) The effective correlation length factor, KW, is given in Expression (E.8).

$$K_w = \frac{\sum_{j=1}^{n} \int_{L_j} \left|\Phi_{i,y}(s)\right| ds}{\sum_{j=1}^{m} \int_{\ell_j} \left|\Phi_{i,y}(s)\right| ds} \qquad \text{(E.8)}$$

where:

$\Phi_{i,y}$ is the mode shape i (see F.3).

L_j is the correlation length

ℓ_j is the length of the structure between two nodes (see Figure E.3); for cantilevered structures it is equal to the height of the structure

n is the number of regions where vortex excitation occurs at the same time (see Figure E.3)

m is the number of antinodes of the vibrating structure in the considered mode shape $\Phi_{i,y}$

s is the coordinate defined in Table E.5.

(2) For some simple structures vibrating in the fundamental cross-wind mode and with the exciting force indicated in Table E.5 the effective correlation length factor KW can be approximated by the expressions given in Table E.5.

ONLY FOR REVIEW PURPOSE

Structure	mode shape $\Phi_{i,y}(s)$	K_w	K
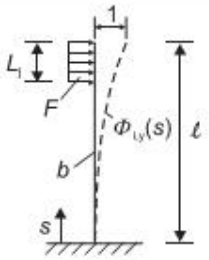	see F.3 with $\zeta = 2,0$ $n = 1$; $m = 1$	$3 \cdot \frac{L_i/b}{\lambda} \cdot \left[1 - \frac{L_i/b}{\lambda} + \frac{1}{3} \cdot \left(\frac{L_i/b}{\lambda}\right)^2\right]$	0,13
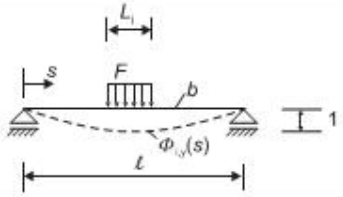	see Table F.1 $n = 1$; $m = 1$	$\cos\left[\frac{\pi}{2} \cdot \left(1 - \frac{L_i/b}{\lambda}\right)\right]$	0,10
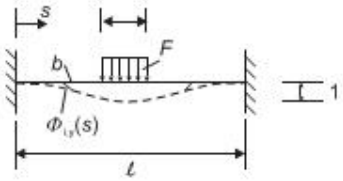	see Table F.1 $n = 1$; $m = 1$	$\frac{L_i/b}{\lambda} + \frac{1}{\pi} \cdot \sin\left[\pi \cdot \left(1 - \frac{L_i/b}{\lambda}\right)\right]$	0,11
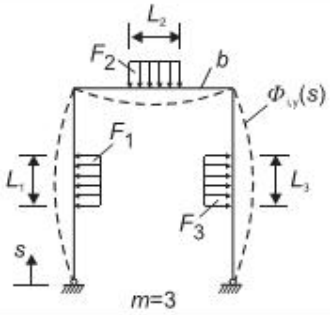	modal analysis $n = 3$ $m = 3$	$\frac{\sum_{i=1}^{n} \int_{L_i} \lvert\Phi_{i,y}(s)\rvert \, ds}{\sum_{i=1}^{m} \int_{l_i} \lvert\Phi_{i,y}(s)\rvert \, ds}$	0,10

NOTE 1 The mode shape, $\Phi_{i,y}(s)$, is taken from F.3. The parameters n and m are defined in Expression (E.7) and in Figure E.3

NOTE 2 $\lambda = \ell/b$

E.1.5.2.5 Mode shape factor

(1) The mode shape factor K is given in Expression (E.9).

$$K = \frac{\sum_{j=1}^{n} \int_{L_j} \left| \Phi_{i,y}(s) \right| ds}{4 \cdot \pi \cdot \sum_{j=1}^{m} \int_{\ell_j} \Phi_{i,y}^2(s) ds} \qquad \text{(E.9)}$$

where:

m is defined in E.1.5.2.4 (1)

$\Phi_{i,y}(s)$ is the cross-wind mode shape i (see F.3)

A_j is the length of the structure between two nodes (see Figure E.3)

(2) For some simple structures vibrating in the fundamental cross-wind mode the mode shape factor is given in Table E.5.

E.1.5.2.6 Number of load cycles

(1) The number of load cycles N caused by vortex excited oscillation is given by Expression (E.10).

$$N = 2 \cdot T \cdot n_y \cdot \varepsilon_0 \cdot \left(\frac{v_{crit}}{v_0} \right)^2 \cdot \exp\left(-\left(\frac{v_{crit}}{v_0} \right)^2 \right) \qquad \text{(E.10)}$$

where:

n_y is the natural frequency of cross-wind mode [Hz]. Approximations for n_y are given in Annex F

v_{crit} is the critical wind velocity [m/s] given in E.1.3.1

v_0 is $\sqrt{2}$ times the modal value of the Weibull probability distribution assumed for the wind velocity [m/s], see Note 2

T is the life time in seconds, which is equal to $3{,}2\ 10^7$ multiplied by the expected lifetime in years

ε_0 is the bandwidth factor describing the band of wind velocities with vortex-induced

ONLY FOR REVIEW PURPOSE

Note 1: The National Annex may specify the minimum value of N. The recommended value is $N \geq 10^4$.

Note 2: The value v0 can be taken as 20 % of the characteristic mean wind velocity as specified in 4.3.1 (1) at the height of the cross section where vortex shedding occurs.

Note 3: The bandwidth factor ε_0 is in the range 0.1 – 0.3. It may be taken as $\varepsilon_0 = 0.3$.

E.1.5.2.7 Vortex resonance of vertical cylinders in a row or grouped arrangement

(1) For circular cylinders in a row or grouped arrangement with or without coupling (see Figure E.4) vortex excited vibrations may occur.

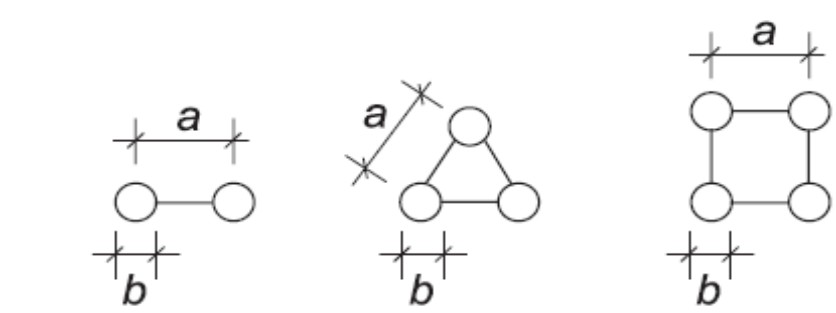

Figure E.4 — In-line and grouped arrangements of cylinders

(2) The maximum deflections of oscillation can be estimated by Expression (E.6) and the calculation procedure given in E.1.5.2 with the modifications given by Expressions (E.11) and (E. 12).

For in-line, free standing circular cylinders without coupling:

$$c_{lat} = 1.5 \cdot c_{lat(single)} \quad \text{for} \quad 1 \leq \frac{a}{b} \leq 10$$

$$c_{lat} = c_{lat(single)} \quad \text{for} \quad \frac{a}{b} \geq 15$$

$$\text{linear interpolation} \quad \text{for} \quad 10 < \frac{a}{b} \leq 15 \qquad \text{(E.11)}$$

$$St = 0.1 + 0.85 \cdot \log\left(\frac{a}{b}\right) \quad \text{for} \quad 1 < \frac{a}{b} \leq 9$$

$$St = 0.18 \quad \text{for} \quad \frac{a}{b} > 9$$

where:

$c_{lat(single)} = c_{lat}$ as given in Table E.3

for coupled cylinders:

ONLY FOR REVIEW PUR

$$c_{lat} = K_{iv} \cdot c_{lat(single)} \quad \text{for} \quad 1.0 \le a/b \le 3.0 \qquad \text{(E.12)}$$

where:

K_{iv} is the interference factor for vortex shedding (Table E.8)
St is the Strouhal number, given in Table E.8
Sc is the Scruton number, given in Table E.8

For coupled cylinders with a/b> 3.0 specialist advice is recommended.

Note: The factor 1.5 ·c_{lat} for circular cylinders without coupling is a rough approximation. It is expected to be conservative.

E.1.5.3 Approach 2, for the calculation of the cross wind amplitudes

(1) The characteristic maximum displacement at the point with the largest movement is given in Expression (E.13).

$$y_{max} = \sigma_y \cdot k_p \qquad \text{(E.13)}$$

where:

σ_y is the standard deviation of the displacement, see (2)

k_p is the peak factor, see (6)

(2) The standard deviation σ_y of the displacement related to the width b at the point with the largest deflection (Φ = 1) can be calculated by using Expression (E.14).

$$\frac{\sigma_y}{b} = \frac{1}{St^2} \cdot \frac{C_c}{\sqrt{\frac{Sc}{4 \cdot \pi} - K_a \cdot \left(1 - \left(\frac{\sigma_y}{b \cdot a_L}\right)^2\right)}} \cdot \sqrt{\frac{\rho \cdot b^2}{m_e}} \cdot \sqrt{\frac{b}{h}} \qquad \text{(E.14)}$$

where:

C_c is the aerodynamic constant dependent on the cross-sectional shape, and for a circular cylinder also dependent on the Reynolds number Re as defined in E.1.3.4 (1); given in Table E.6.

K_a is the aerodynamic damping parameter as given in E.1.5.3 (4)

a_L is the normalised limiting amplitude giving the deflection of structures with very low damping; given in Table E.6

Sc *is the Scruton number given in E.1.3.3*

St is the Strouhal number given Table E.1

ρ is the air density under vortex shedding conditions, see

ONLY FOR REVIEW PURPOSE

m_e is the effective mass per unit length; given in F.4 (1)

h,b is the height and width of structure. For structures with varying width, the width at the point with largest displacements is used.

Note 1: The value of the air density ρ may be given in the National Annex. The recommended value is 1,25 kg/m^3.

Note 2: The aerodynamic constant Cc depends on the lift force acting on a non-moving structure.

Note 3: The motion-induced wind loads are taken into account by K_a and a_L.

(3) The solution to Expression (E.14) is given in Expression (E.15).

$$\left(\frac{\sigma_y}{b}\right)^2 = C_1 + \sqrt{C_1^2 + C_2} \qquad \text{(E.15)}$$

where the constants C_1 and C_2 are given by:

$$C_1 = \frac{a_L^2}{2}\cdot\left(1 - \frac{Sc}{4\cdot\pi\cdot K_a}\right); \qquad C_2 = \frac{\rho\cdot b^2}{m_e}\cdot\frac{a_L^2}{K_a}\cdot\frac{C_c^2}{St^4}\cdot\frac{b}{h} \qquad \text{(E.16)}$$

(4) The aerodynamic damping constant Ka decreases with increasing turbulence intensity. For a turbulence intensity of 0 %, the aerodynamic damping constant may be taken as $Ka = K_{a,max}$, which is given in Table E.6.

Note: Using $K_{a,max}$ for turbulence intensities larger 0 % gives conservative predictions of displacements. More detailed information on the influence of the turbulence intensity on Ka,max be specified in the National Annex.

(5) For a circular cylinder and a square cross-section the constants Cc, $K_{a,max}$ and a_L are given in Table E.6.

Table E.6 — Constants for determination of the effect of vortex shedding

Constant	Circular cylinder Re ≤ 10^5	Circular cylinder Re = $5\cdot10^5$	Circular cylinder Re ≥ 10^6	Square cross-section
C_c	0.02	0.005	0.01	0.04
$K_{a,max}$	2	0.5	1	6
a_L	0.4	0.4	0.4	0.4

Note: For circular cylinders the constants Cc and $K_{a,max}$ are assumed to vary linearly with the logarithm of the Reynolds number for 10^5<Re<$5\cdot10^5$ and for $5\cdot10^5$<Re< 10^6,

(6) The peak factor k_p should be determined.

ONLY FOR REVIEW PURPOSE

$$k_p = \sqrt{2}\left\{1 + 1.2 \cdot \arctan\left(0.75\left(\frac{Sc}{(4 \cdot \pi \cdot K_a)}\right)^4\right)\right\} \quad \text{(E.17)}$$

Note: The National Annex may specify the peak factor. Expression (E.17) gives the recommended value.

(7) The number of load cycles may be obtained from E.1.5.2.6 using a bandwidth factor of $\varepsilon_0 = 0.15$.

E.1.6 Measures against vortex induced vibrations

(1) The vortex-induced amplitudes may be reduced by means of aerodynamic devices (only under special conditions, e.g. Scruton numbers larger than 8) or damping devices supplied to the structure. The drag coefficient cf for a structure with circular cross section and aerodynamic devices based on the basic diameter b, may increase up to a value of 1,4. Both applications require special advice.

(2) For more information see codes for special structures.

E.2 Galloping

E.2.1 General

(1) Galloping is a self-induced vibration of a flexible structure in cross wind bending mode. Non circular cross sections including L-, I-, U- and T-sections are prone to galloping. Ice may cause a stable cross section to become unstable.

(2) Galloping oscillation starts at a special onset wind velocity v_{CG} and normally the amplitudes increase rapidly with increasing wind velocity.

E.2.2 Onset wind velocity

(1) The onset wind velocity of galloping, v_{CG}, is given in Expression (E.18).

$$v_{CG} = \frac{2 \cdot Sc}{a_G} \cdot n_{1,y} \cdot b \quad \text{(E.18)}$$

where:

Sc is the Scruton number as defined in E.1.3.3 (1)

$n_{1,y}$ is the cross-wind fundamental frequency of the structure; approximations of n1,y are given in F.2

b is the width as defined in Table E.7

a_G is the factor of galloping instability (Table E.7); if no factor of galloping instability is known, $a_G = 10$ may be used.

(2) It should be ensured that :

$$v_{CG} > 1.25 \cdot v_m \quad \text{(E.19)}$$

where:

ONLY FOR REVIEW PURPOSE

v_m is the mean wind velocity as defined in Expression (4.3) and calculated at the height, where galloping process is expected, likely to be the point of maximum amplitude of oscillation.

(3) If the critical vortex shedding velocity vcritis close to the onset wind velocity of galloping v_{CG}:

$$0.7 < \frac{v_{CG}}{v_{crit}} < 1.5 \qquad \text{(E.20)}$$

interaction effects between vortex shedding and galloping are likely to occur. In this case specialist advice is recommended.

ONLY FOR REVIEW PURPOSE

Table E.7 – Factor of galloping instability a_G

Cross-section		Factor of galloping instability a_G	Cross-section		Factor of galloping instability a_G
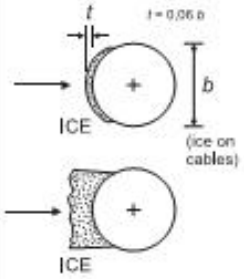		1,0			1,0
			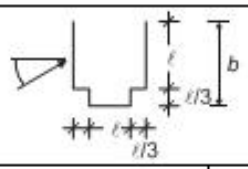		4
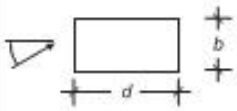 linear interpolation	$d/b=2$	2	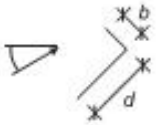	$d/b=2$	0,7
	$d/b=1,5$	1,7	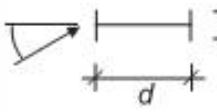	$d/b=2,7$	5
	$d/b=1$	1,2	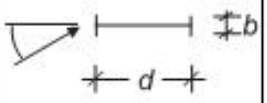	$d/b=5$	7
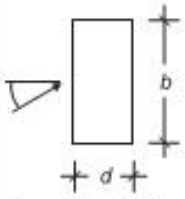 linear interpolation	$d/b=2/3$	1	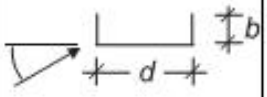	$d/b=3$	7,5
	$d/b=1/2$	0,7	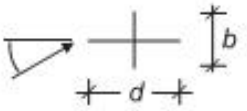	$d/b=3,4$	3,2
	$d/b=1/3$	0,4	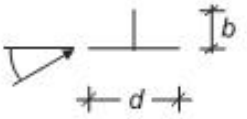	$d/b=2$	1
NOTE Extrapolations for the factor a_G as function of d/b are not allowed.					

E.2.3 Classical galloping of coupled cylinders

(1) For coupled cylinders (Figure E.4) classical galloping may occur.

(2) The onset velocity for classical galloping of coupled cylinders, v_{CG}, may be estimated by Expression (E.21)

$$v_{CG} = \frac{2 \cdot SC}{a_G} \cdot n_{1,x} \cdot b \qquad \text{(E.21)}$$

where Sc, a_G and b are given in Table E.8 and n1,y is the natural frequency of the bending mode (see F.2).

(3) It should be ensured that:

$$v_{CG} > 1.25 \cdot v_m(z) \qquad \text{(E.22)}$$

where:

$v_m(z)$ is the mean wind velocity as defined in Expression (4.3), calculated at the height z, where the galloping excitation is expected, that is likely to be the point of maximum amplitude of oscillation

ONLY FOR REVIEW PURPOSE

Table E.8 — Data for the estimation of cross-wind response of coupled cylinders at in-line and grouped arrangements

Coupled cylinders	Scruton number $Sc = \frac{2 \cdot \delta_s \cdot \Sigma m_w}{\rho \cdot b^2}$ (compare with Expression (E.4))			
	$a/b = 1$	$a/b \geq 2$	$a/b \leq 1{,}5$	$a/b \geq 2{,}5$
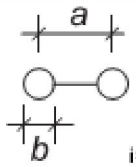 i=2	$K_{iv} = 1{,}5$	$K_{iv} = 1{,}5$	$a_G = 1{,}5$	$a_G = 3{,}0$
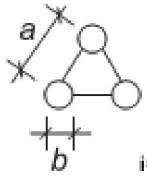 i=3	$K_{iv} = 4{,}8$	$K_{iv} = 3{,}0$	$a_G = 6{,}0$	$a_G = 3{,}0$
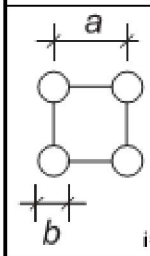 i=4	$K_{iv} = 4{,}8$	$K_{iv} = 3{,}0$	$a_G = 1{,}0$	$a_G = 2{,}0$
	linear interpolation			

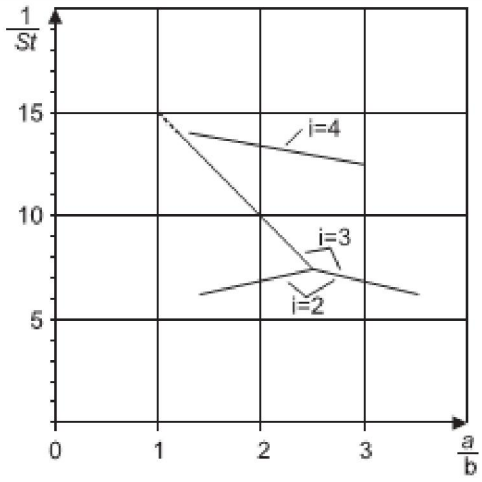

Reciprocal Strouhal numbers of coupled cylinders with in-line and grouped arrangements

E.3 Interference galloping of two or more free standing cylinders

(1) Interference galloping is a self-excited oscillation which may occur if two or more cylinders are arranged close together without being connected with each other.

(2) If the angle of wind attack is in the range of the critical wind direction $ß_k$ and if a/b< 3 (see Figure E.5), the critical wind velocity, v_{CIG}, may be estimated by

$$v_{CIG} = 3.5 \cdot n_{1,y} \cdot b \sqrt{\frac{\frac{a}{b} \cdot Sc}{a_{IG}}} \qquad (E.23)$$

where:

Sc is the Scruton number as defined in E.1.3.3 (1)
a_{IG} is the combined stability parameter a_{IG} = 3,0
$n_{1,y}$ is the fundamental frequency of cross-wind mode. Approximations are given in F.2
a is the spacing
b is the diameter

NOTE The National Annex may give additional guidance on a_{IG}

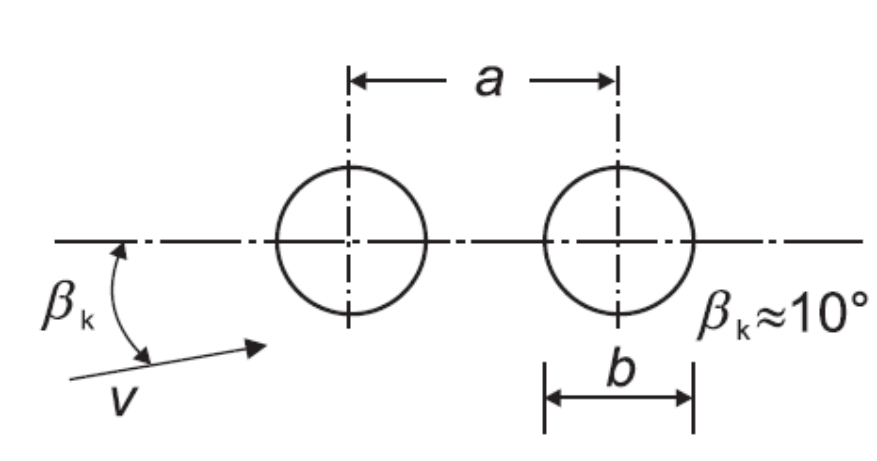

Figure E.5 — Geometric parameters for interference galloping

(3) Interference galloping can be avoided by coupling the free-standing cylinders. In that case classical galloping may occur (see E.2.3).

REVIEW PURPOSE

E.4 Divergence and Flutter

E.4.1 General

(1) Divergence and flutter are instabilities that occur for flexible plate-like structures, such as signboards or suspension-bridge decks, above a certain threshold or critical wind velocity. The instability is caused by the deflection of the structure modifying the aerodynamics to alter the loading.

(2) Divergence and flutter should be avoided.

(3) The procedures given below provide a means of assessing the susceptibility of a structure in terms of simple structural criteria. If these criteria are not satisfied, specialist advice is recommended

E.4.2 Criteria for plate-like structures

To be prone to either divergence or flutter, the structure satisfies all of the three criteria given below. The criteria should be checked in the order given (easiest first) and if any one of the criteria is not met, the structure will not be prone to either divergence or flutter.

- The structure, or a substantial part of it, has an elongated cross-section (like a flat plate) with b/d less than 0,25 (see Figure E.6).
- The torsional axis is parallel to the plane of the plate and normal to the wind direction, and the centre of torsion is at least d/4 downwind of the windward edge of the plate, where d is the inwind depth of the plate measured normal to the torsional axis. This includes the common cases of torsional centre at geometrical centre, i.e. centrally supported signboard or canopy, and torsional centre at downwind edge, i.e. cantilevered canopy.
- The lowest natural frequency corresponds to a torsional mode, or else the lowest torsional natural frequency is less than 2 times the lowest translational natural frequency.

E.4.3 Divergency velocity

(1) The critical wind velocity for divergence is given in Expression (E.24)

$$v_{\text{div}} = \left[\frac{2 \cdot k_\theta}{\rho \cdot d^2 \cdot \frac{dc_M}{d\theta}} \right]^{\frac{1}{2}} \qquad \text{(E.24)}$$

where:

k_θ is the torsional stiffness

c_M is the aerodynamic moment coefficient, given in Expression (E.25):

$$c_M = \frac{M}{1/2 \cdot \rho \cdot v^2 \cdot d^2} \qquad \text{(E.25)}$$

$dc_M/d\theta$ is the rate of change of aerodynamic moment coefficient with respect to rotation about the torsional centre, θ is expressed in radians.

ONLY FOR REVIEW PURPOSE

ρ is the density of air given in 4.5

d is the in wind depth (chord) of the structure (see Figure E.6)

b width as defined in Figure E.6

(2) Values of $dc_M/d\theta$ measured about the geometric centre of various rectangular sections are given in Figure E.6.

(3) It should be ensured that:

$$v_{div} > 2 \cdot v_m(z_e) \quad \text{(E.26)}$$

where:

$v_m(z_e)$ mean wind velocity as defined in Expression (4.3) at height z_e (defined in Figure 6.1)

RPOSE

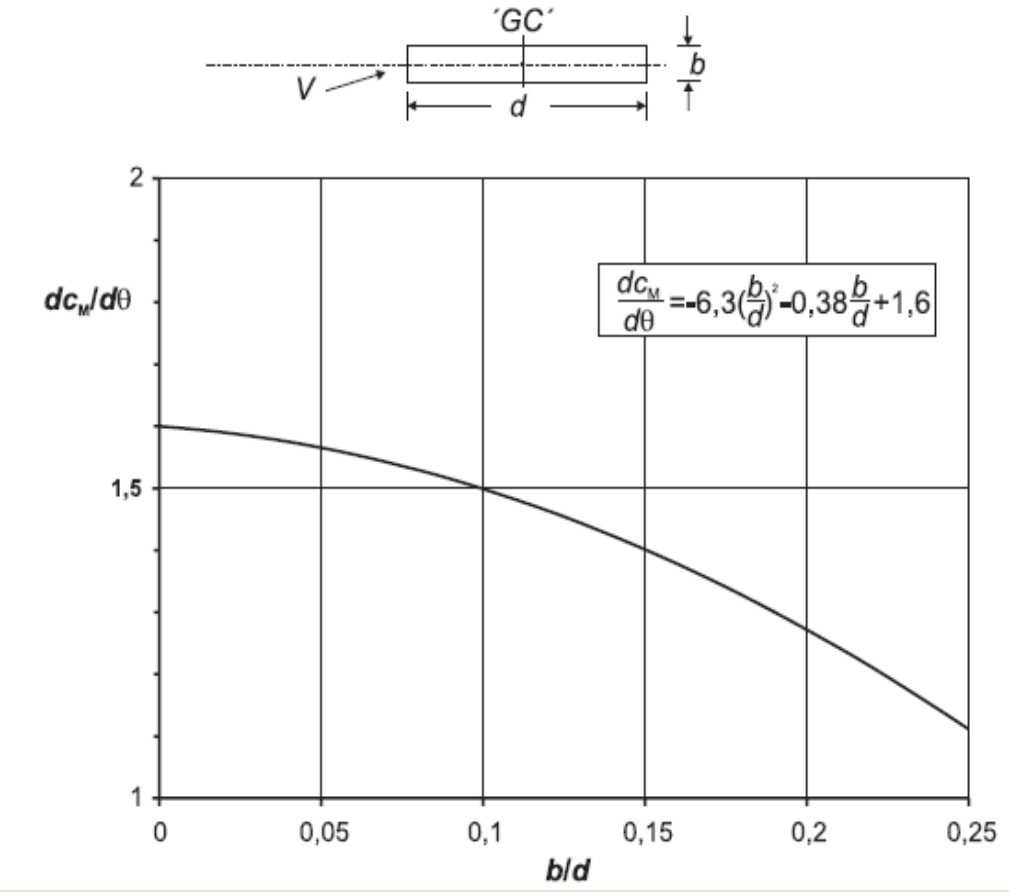

Figure E.6 — Rate of change of aerodynamic moment coefficient, $dc_M/d\theta$, with respect to geometric centre "GC" for rectangular section

ANNEX F
(INFORMATIVE)
DYNAMIC CHARACTERISTICS OF STRUCTURES

F.1 General

(1) Calculation procedures recommended in this section assume that structures possess linear elastic behaviour and classical normal modes. Dynamic structural properties are therefore characterised by:

– natural frequencies

– modal shapes

– equivalent masses

– logarithmic decrements of damping.

(2) Natural frequencies, modal shapes, equivalent masses and logarithmic decrements of damping should be evaluated, theoretically or experimentally, by applying the methods of structural dynamics.

(3) Fundamental dynamic properties can be evaluated in approximate terms, using simplified analytical, semi-empirical or empirical equations, provided they are adequately proved: Some of these equations are given in F.2 to F.5.

F.2 Fundamental frequency

(1) For cantilevers with one mass at the end a simplified expression to calculate the fundamental flexural frequency n_1 of structures is given by Expression (F.1):

$$n_1 = \frac{1}{2 \cdot \pi} \cdot \sqrt{\frac{g}{x_1}} \qquad \text{(F.1)}$$

where:

g is the acceleration of gravity = 9.81 m/s^2

x_1 is the maximum displacement due to self weight applied in the vibration direction in m

(2) The fundamental flexural frequency n1 of multi-storey buildings with a height larger than 50 m can be estimated using Expression (F.2):

$$n_1 = \frac{46}{h} \text{ [Hz]} \qquad \text{(F.2)}$$

where:

ONLY FOR REVIEW PURPOSE

h is the height of the structure in m

The same expression may give some guidance for single-storey buildings and towers.

(3) The fundamental flexural frequency n1, of chimneys can be estimated by Expression (F.3):

$$n_1 = \frac{\varepsilon_1 \cdot b}{h_{\text{eff}}^2} \cdot \sqrt{\frac{W_s}{W_t}} \quad \text{[Hz]} \qquad \text{(F.3)}$$

with

$$h_{\text{eff}} = h_1 + \frac{h_2}{3} \qquad \text{(F.4)}$$

where:

b is the top diameter of the chimney [m],

h_{eff} is the effective height of the chimney [m], h1 and h2 are given in Figure F.1,

W_s is the weight of structural parts contributing to the stiffness of the chimney,

W_t is the total weight of the chimney,

ε_1 is equal to 1000 for steel chimneys, and 700 for concrete and masonry chimneys

REVIEW PURPOSE

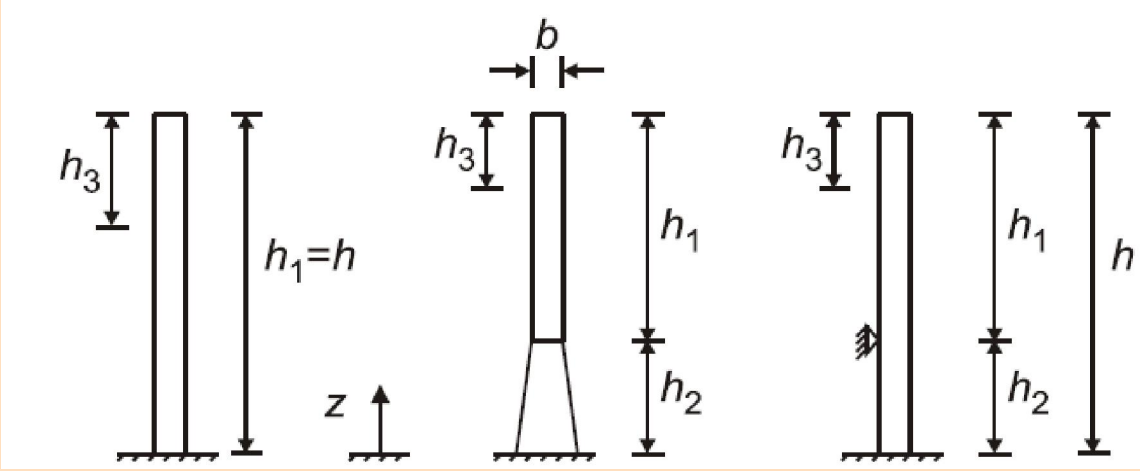

Note: $h_3 = h_1/3$, see F.4 (2)

Figure F.1 — Geometric parameters for chimneys

(4) The fundamental ovalling frequency n1,0of a long cylindrical shell without stiffening rings may be calculated using Expression (F.5).

$$n_{1,0} = 0.492 \cdot \sqrt{\frac{t^3 \cdot E}{\mu_s \cdot (1-\nu^2) \cdot b^4}} \qquad \text{(F.5)}$$

where:
E is Young's modulus in [N/m^2]
T is the shell thickness in [m]
ν is Poisson ratio
μ_s is the mass of the shell per unit area in [kg/m^2]
b is the diameter of the shell in [m]

Expression (F.5) gives the lowest natural frequency of the shell. Stiffness rings increase n0.

(5)The fundamental vertical bending frequency $n_{1,B}$ of a plate or box girder bridge may be approximately derived from Expression (F.6).

$$n_{1,B} = \frac{K^2}{2 \cdot \pi \cdot L^2} \cdot \sqrt{\frac{EI_b}{m}}$$

where:

L is the length of the main span in m

E is Youngs Modulus in N/m^2

I_b is the second moment of area of cross-section for vertical bending at mid-span in m^4

m is the mass per unit length of the full cross-section ad midspan (for dead and super-imposed dead loads) in kg/m

K is a dimensionless factor depending on span arrangement defined below.

a) For single span bridges:

$K = \pi$ if simply supported or
$K = 3.9$ if propped cantilevered or
$K = 4.7$ if fixed end supports

b) For two-span continuous bridges:

K is obtained from Figure F.2, using the curve for two-span bridges, where

L_1 is the length of the side span and $L \geq L_1$.

c) For three-span continuous bridges:

ONLY FOR REVIEW PURPOSE

K is obtained from Figure F.2, using the appropriate curve for three-span bridges, where

L_1 is the length of the longest side span

L_2 is the length of the other side span and $L \geq L_1 \geq L_2$

This also applies to three-span bridges with a cantilevered/suspended main span.

If L_1>L then K may be obtained from the curve for two span bridges, neglecting the shortest side span and treating the largest side span as the main span of an equivalent two-span bridge.

d) For symmetrical four-span continuous bridges (i.e. bridges symmetrical about the central support):

K may be obtained from the curve for two-span bridges in Figure F.2 treating each half of the bridge as an equivalent two-span bridge.

e) For unsymmetrical four-span continuous bridges and continuous bridges with more than four spans:

K may be obtained from Figure F.2 using the appropriate curve for three-span bridges, choosing the main span as the greatest internal span.

Note 1: If the value of $\sqrt{\frac{EI_b}{m}}$ at the support exceeds twice the value at mid-span, or is less than 80 % of the mid-span value, then the Expression (F.6) should not be used unless very approximate values are sufficient

Note 2: A consistent set should be used to give $n_{1,B}$ in cycles per second.

(6) The fundamental torsional frequency of plate girder bridges is equal to the fundamental bending frequency calculated from Expression (F.6), provided the average longitudinal bending inertia per unit width is not less than 100 times the average transverse bending inertia per unit length.

(7) The fundamental torsional frequency of a box girder bridge may be approximately derived from Expression (F.7):

$$n_{1,T} = n_{1,b} \cdot \sqrt{P_1 \cdot (P_2 + P_3)} \qquad \text{(F.7)}$$

$$P_1 = \frac{m \cdot b^2}{I_p} \qquad \text{(F.8)}$$

$$P_2 = \frac{\sum r_j^2 \cdot I_j}{b^2 \cdot I_p} \qquad \text{(F.9)}$$

ONLY FOR REVIEW PURPOSE

$$P_3 = \frac{L^2 \cdot \sum J_j}{2 \cdot K^2 \cdot b^2 \cdot I_p \cdot (1+\nu)} \qquad \text{(F.10)}$$

[where:

$n_{1,B}$ is the fundamental bending frequency in Hz
b is the total width of the bridge
m is the mass per unit length defined in F.2 (5)
ν is Poisson´s ratio of girder material
r_j is the distance of individual box centre-line from centre-line of bridge
J_j is the second moment of mass per unit length of individual box for vertical bending at mid-span, including an associated effective width of deck
I_p is the second moment of mass per unit length of cross-section at mid-span. It is described by Expression (F.11).

$$I_p = \frac{m_d \cdot b^2}{12} + \sum (I_{pj} + m_j \cdot r_j^2) \qquad \text{(F.11)}$$

where:

m_d is the mass per unit length of the deck only, at mid-span

I_{pj} is the mass moment of inertia of individual box at mid-span

m_j is the mass per unit length of individual box only, at mid-span, without associated portion of deck

J_j is the torsion constant of individual box at mid-span. It is described by Expression (F.12).

$$J = \frac{4 \cdot A_j^2}{\oint \frac{ds}{t}} \qquad \text{(F.12)}$$

where:

A_j is the enclosed cell area at mid-span

$\oint \frac{ds}{t}$ is the integral around box perimeter of the ratio length/thickness for each portion of box wall at mid-span

Note: Slight loss of accuracy may occur if the proposed Expression (F.12) is applied to multibox bridges whose plan aspect ratio (=span/width) exceeds 6.

ONLY FOR REVIEW PURPOSE

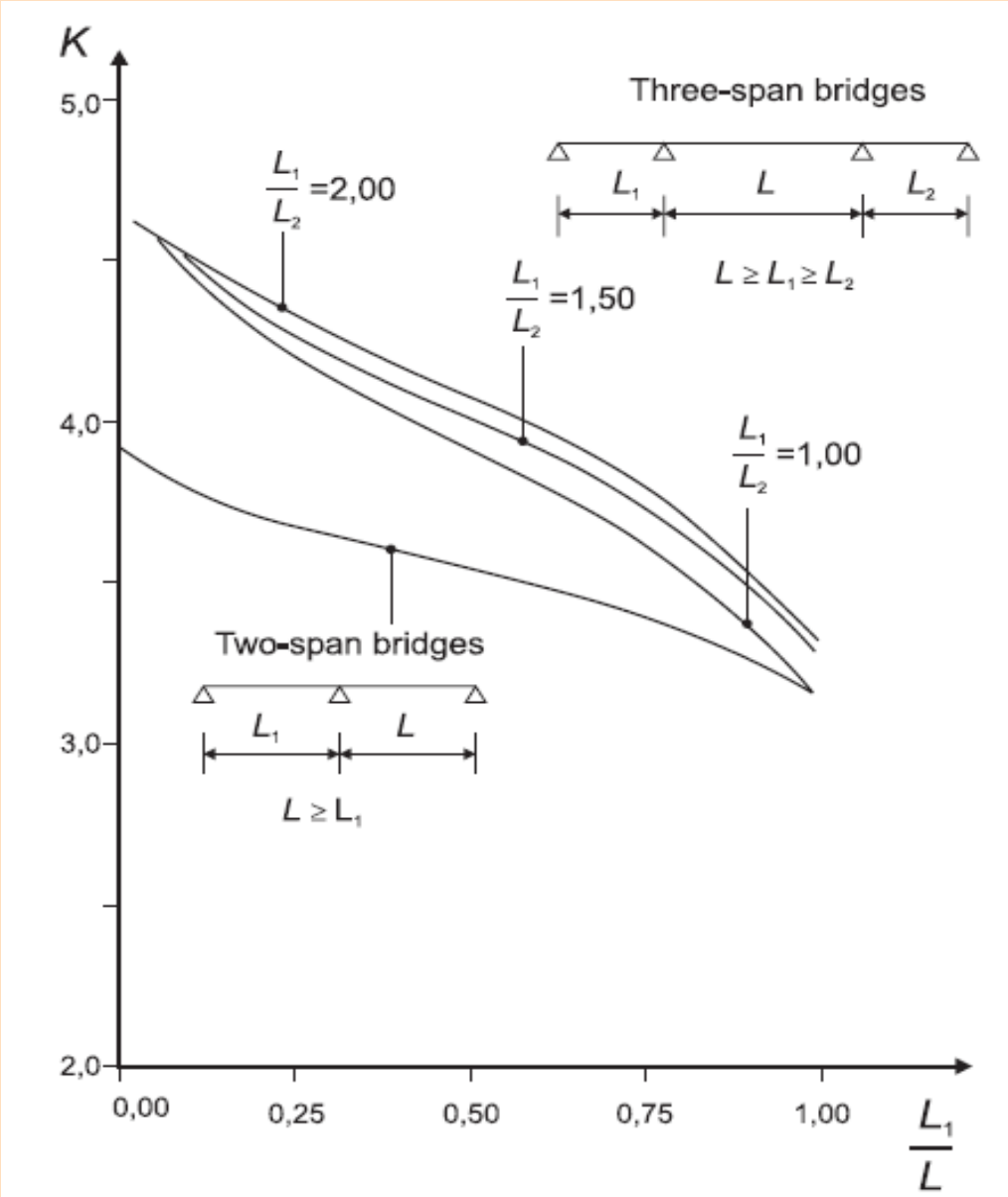

Figure F.2 — Factor K used for the derivation of fundamental bending frequency

F.3 Fundamental mode shape

(1) The fundamental flexural mode $\Phi 1(z)$ of buildings, towers and chimneys cantilevered from the ground may be estimated using Expression (F.13), see Figure F.3.

$$\Phi_1(z) = \left(\frac{z}{h}\right)^{\zeta} \qquad \text{(F.13)}$$

where:

ζ = 0.6 for slender frame structures with non load-sharing walling or cladding

ζ = 1.0 for buildings with a central core plus peripheral columns or larger columns plus shear bracings

ζ = 1.5 for slender cantilever buildings and buildings supported by central reinforced concrete cores

ζ = 2.0 for towers and chimneys

ζ = 2.5 for lattice steel towers

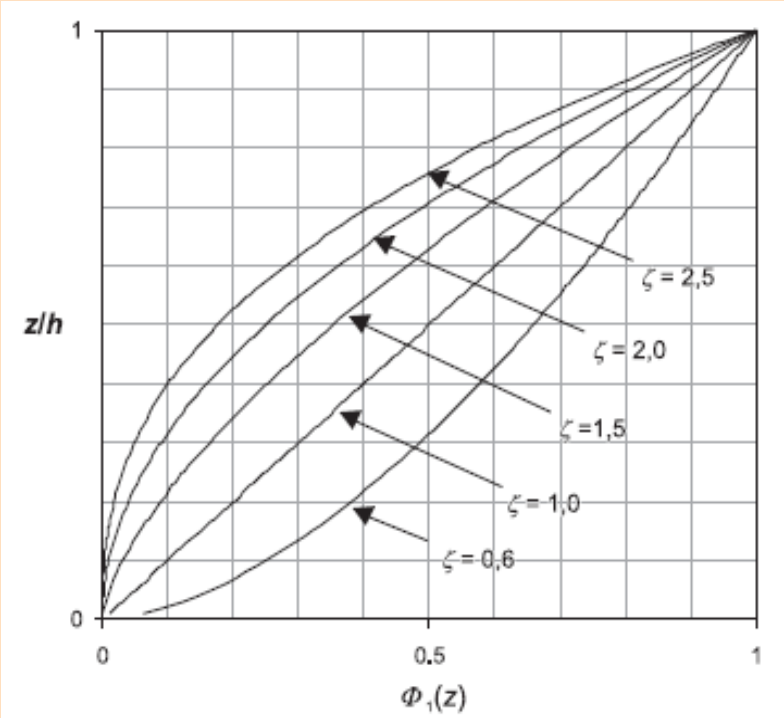

Figure F.3— Fundamental flexural mode shape for buildings, towers and chimneys cantilevered from the ground

2) The fundamental flexural vertical mode $\Phi 1(s)$ of bridges may be estimated as shown in Table F.1.

Table F.1 — Fundamental flexural vertical mode shape for simple supported and clamped structures and structural elements

Scheme	Mode shape	$\Phi_1(s)$
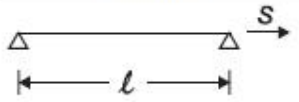	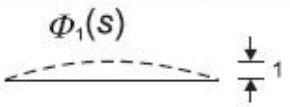	$\sin\left(\pi \cdot \frac{s}{\ell}\right)$
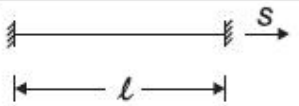	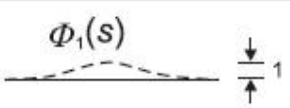	$\frac{1}{2} \cdot \left[1 - \cos\left(2 \cdot \pi \cdot \frac{s}{\ell}\right)\right]$

F.4 Equivalent mass

(1) The equivalent mass per unit length m_e of the fundamental mode is given by Expression (F.14).

$$m_e = \frac{\int_0^{\ell} m(s) \cdot \Phi_1^2(s) \mathrm{d}s}{\int_0^{\ell} \Phi_1^2(s) \mathrm{d}s} \qquad \text{(F.14)}$$

where:

m is the mass per unit length

ℓ is the height or span of the structure or the structural element

$i = 1$ is the mode number

(2) For cantilevered structures with a varying mass distribution m_e may be approximated by the average value of m over the upper third of the structure h3 (see Figure F.1).

(3) For structures supported at both ends of span A with a varying distribution of the mass per unit length m_e may be approximated by the average value of m over a length of A/3 centred at the point in the structure in which Φ(s) is maximum (see Table F.1).

F.5Logarithmic decrement of damping

(1) The logarithmic decrement of damping δ_s for fundamental bending mode may be estimated by Expression (F.15).

$$\delta = \delta_s + \delta_a + \delta_d \qquad \text{(F.15)}$$

where:

δ_s is the logarithmic decrement of structural damping

δ_a is the logarithmic decrement of aerodynamic damping for the fundamental mode

δ_d is the logarithmic decrement of damping due to special devices (tuned mass

ONLY FOR REVIEW PURPOSE

dampers, sloshing tanks etc.)

(2) Approximate values of logarithmic decrement of structural damping, δ_s, are given in Table F.2.

(3) The logarithmic decrement of aerodynamic damping δ_a, for the fundamental bending mode of alongwind vibrations may be estimated by Expression (F.16).

$$\delta_a = \frac{c_t \cdot \rho \cdot v_m(z_e)}{2 \cdot n_1 \cdot \mu_e} \qquad \text{(F.16)}$$

where:
c_f is the force coefficient for wind action in the wind direction stated in Section 7.
μ_e is the equivalent mass per unit area of the structure which for rectangular areas given by Expression (F.17).

$$\mu_e = \frac{\int_0^h \int_0^b \mu(y,z) \cdot \Phi_1^2(y,z) \mathrm{d}y\mathrm{d}z}{\int_0^h \int_0^b \Phi_1^2(y,z) \mathrm{d}y\mathrm{d}z} \qquad \text{(F.17)}$$

where

$\mu(y,z)$	is the mass per unit area of the structure
$\Phi_1(y,z)$	is the mode shape.

The mass per unit area of the structure at the point of the largest amplitude of the mode shape is normally a good approximation to μ_e.

(4) In most cases the modal deflections $\Phi(y,z)$ are constant for each height z and instead of Expression (F.16) the logarithmic decrement of aerodynamic damping δ_a, for along wind vibrations may be estimated by Expression (F.18).

$$\delta_a = \frac{c_t \cdot \rho \cdot b \cdot v_m(z_e)}{2 \cdot n_1 \cdot m_e} \qquad \text{(F.18)}$$

(5) If special dissipative devices are added to the structure, i_d should be calculated by suitable theoretical or experimental techniques.

ONLY FOR REVIEW PURPOSE

Table F.2 —Approximate values of logarithmic decrement of structural damping in the fundamental mode, δ_s

Structural type			structural damping, δ_s
reinforced concrete buildings			0,10
steel buildings			0,05
mixed structures concrete + steel			0,08
reinforced concrete towers and chimneys			0,03
unlined welded steel stacks without external thermal insulation			0,012
unlined welded steel stack with external thermal insulation			0,020
steel stack with one liner with external thermal insulation[a]		$h/b < 18$	0,020
		$20 \le h/b < 24$	0,040
		$h/b \ge 26$	0,014
steel stack with two or more liners with external thermal insulation [a]		$h/b < 18$	0,020
		$20 \le h/b < 24$	0,040
		$h/b \ge 26$	0,025
steel stack with internal brick liner			0,070
steel stack with internal gunite			0,030
coupled stacks without liner			0,015
guyed steel stack without liner			0,04
steel bridges + lattice steel towers	welded		0,02
	high resistance bolts		0,03
	ordinary bolts		0,05
composite bridges			0,04
concrete bridges	prestressed without cracks		0,04
	with cracks		0,10
Timber bridges			0,06 - 0,12
Bridges, aluminium alloys			0,02
Bridges, glass or fibre reinforced plastic			0,04 - 0,08
cables	parallel cables		0,006
	spiral cables		0,020

NOTE 1 The values for timber and plastic composites are indicative only. In cases where aerodynamic effects are found to be significant in the design, more refinded figures are needed through specialist advice (agreed if appropriate with the competent Authority.

NOTE 2 For cable supported bridges the values given in Table F.2 need to be factored by 0,75

[a] For intermediate values of h/b, linear interpolation may be used

BIBLIOGRAPHY

ISO 2394	General principles on reliability for structures
ISO 3898	Bases for design of structures — Notations — General symbols
ISO 8930	General principles on reliability for structures - List of equivalent terms
ISO FDIS12494	
EBCS EN 12811-1	Temporary works equipment – Part 1: Scaffolds – Performance requirements and general design
ISO 12494	Atmospheric icing of structures

ONLY FOR REVIEW PURPOSE