EBCS-1 Part 3

Ethiopian Building Code Standard – Based on European Norme

Actions on structures - General actions - Part 3:

Crane loads

ONLY FOR REVIEW PURPOSE

© 2014 All rights reserved.
Ministry of Urban Development, Housing and Construction.

Ref. No. EBCS EN 1991- 3: 2014

ONLY FOR REVIEW PURPOSE

Ethiopian Building Code Standard Revision Committee on "BASIS OF DESIGN AND ACTIONS ON STRUCTURES"

ONLY FOR REVIEW PURPOSE

Steering Committee Chair

Hailemeskel Tefera

Project Coordinator

Esayas Gebreyouhannes

Technical Committee Members

Bedilu Habte	**Chairman**
Wondimu Kassa	**Secretary**
Adil Zekaria	
Esayas Gebreyouhannes	
Fekadu Melese	

Editorial work assisted by:

Yisshak Taddesse

ONLY FOR REVIEW PURPOSE

NATIONAL FOREWORD

The Proclamation to define the powers and duties of The Executive organs of The Federal Democratic Republic of Ethiopia Proclamation No 691/ 2010 and Ethiopian Building Proclamation No 624/2009 empowers the Ministry of Urban Development, Housing and Construction to prepare the Country's Building Code, issue Standards for design and construction works, and follow up and supervise the implementation of same.

This Ethiopian Standard is the official English language version of "BASIS OF STRUCTURAL DESIGN - **EBCS EN 1991-3:2014**". It supersedes part of "BASIS OF DESIGN AND ACTIONS ON STRUCTURES - EBCS-1 1995" which is withdrawn. With an eye on the latest technological advancements and trends worldwide and with the aim of bringing the Ethiopian Construction Standard at par with the present state-of-the-art, this edition has brought a major shift in terms of contents and comprehensiveness. Ethiopia is a signatory member of CEN/CENELEC to adopt European Standards in a similar fashion as the Members and Affiliates of CEN/CENELEC in which Ethiopia is bound to comply with the CEN/CENELEC Internal Regulations which stipulate the conditions for giving the basic framework of European Standard the status of a national standard without any alteration. The major benefits to be gained in applying these standards are the harmonization of professional practice and the ensuring of appropriate level of workmanship, level of safety and quality of construction work.

EBCS EN 1991-3:2014 is prepared based on EN 1991-3 by a Technical Committee "BASIS OF DESIGN AND ACTIONS ON STRUCTURES" the secretariat of which is held by Addis Ababa University. The document is intended to be used in conjunction with EBCS EN 1991:2014 to EBCS EN 1998:2014 for the structural design of buildings and civil engineering works, including geotechnical aspects, structural fire design, situations involving earthquakes, execution and temporary structures. The normative part of this Ethiopian Building Code Standard is chosen based on the local needs and construction practice. The range and possible choice are given in the normative text, and a Note will qualify it as a Nationally Determined Parameter (NDP) specific for the Ethiopian Construction industry. The NDPs can be a specific value for a factor, a specific level or class, a particular method or a particular application rule. In the current version of the Ethiopian Building Codes, the NDPs are mostly taken from the recommendations provided by the European Standards. To particularly determine the appropriate values, levels, methods and application conforming to our local conditions extensive and continuous research shall be conducted. In line with such rigorous approach, the NDPs will be published in a National Annex which will be incorporated by amendment into this Ethiopian Standard in due course, after public consultation has taken place for a grace period of one year. As this standard is technical document which, by their very nature, require periodic updating, revised edition will be issued by the Ministry from time to time as appropriate.

ONLY FOR REVIEW PURPOSE

This document does not purport to include all the necessary provisions of a contract. Users are responsible for their correct application.

Compliance with this Ethiopian Building Code Standard does not of itself confer immunity from legal obligations.

The Ministry of Urban Development Housing and Construction as mandated acknowledges this document as a national resource tool and reference document which comprises a front cover, an inside front cover, a title page, National foreword, Table of Contents, pages 1 to 35 and a back cover. This Ethiopian Construction Standard, having been prepared under the direction of the Ethiopian Building Proclamation No 624/2009, was published under the authority of the Ministry of Urban Development, Housing and Construction on 01 December 2014.

H.E Mekuria Haile

Minister , FDRE Ministry of Urban development , Housing and Construction

ONLY FOR REVIEW PURPOSE

ONLY FOR REVIEW PURPOSE

CONTENTS Page

SECTION 1 GENERAL 1

1.1 Scope 1
1.2 Normative References 1
1.3 Distinction between Principles and Application Rules 1
1.4 Terms and definitions 2
1.4.1 Terms and definitions specific for hoists and cranes on runway beams 2
1.4.2 Terms and definitions specific for actions induced by machines 4
1.5 Symbols 4

SECTION 2 ACTIONS INDUCED BY HOISTS AND CRANES ON RUNWAY BEAMS 6

2.1 Field of application 6
2.2 Classifications of actions 6
2.2.1 General 6
2.2.2 Variable actions 6
2.2.3 Accidental actions 7
2.3 Design situations 8
2.4 Representation of crane actions 8
2.5 Load arrangements 9
2.5.1 Vertical loads from monorail hoist blocks underslung from runway beams 9
2.5.2 Horizontal loads from monorail hoist blocks underslung from runway beams 9
2.5.3 Vertical loads from overhead travelling cranes 9
2.5.4 Horizontal loads from overhead travelling cranes 10
2.5.5 Multiple crane action 12
2.6 Vertical crane loads - characteristic values 12
2.7 Horizontal crane loads - characteristic values 13
2.7.1 General 13
2.7.2 Longitudinal loads $H_{L,i}$ and transverse loads $H_{T,i}$ caused by acceleration and deceleration of the crane 13
2.7.3 Drive force K 15
2.7.4 Horizontal loads $H_{S,i,j,k}$ and the guide force S caused by skewing of the crane 16
2.7.5 Horizontal loads $H_{T,3}$ caused by acceleration or deceleration of the crab 19
2.8 Temperature effects 19
2.9 Loads on access walkways, stairs, platforms and guard rails 19
2.9.1 Vertical loads 19
2.9.2 Horizontal loads 19
2.10 Test loads 19
2.11 Accidental actions 20
2.11.1 Buffer forces $H_{B,1}$ related to crane movement 20
2.11.2 Buffer forces $H_{B,2}$ related to movements of the crab 21
2.11.3 Tilting forces 21

ONLY FOR REVIEW PURPOSE

2.12 Fatigue loads 21
2.12.1 Single crane action 21
2.12.2 Stress range effects of multiple wheel or crane actions 24

SECTION 3 ACTIONS INDUCED BY MACHINERY 25

3.1 Field of application 25
3.2 Classification of actions 25
3.2.1 General 25
3.2.2 Permanent actions 25
3.2.3 Variable actions 25
3.2.4 Accidental actions 26
3.3 Design situations 26
3.4 Representation of actions 26
3.4.1 Nature of the loads 26
3.4.2 Modelling of dynamic actions 27
3.4.3 Modelling of the machinery-structure interaction 27
3.5 Characteristic values 28
3.6 Serviceability criteria 30

Annex A (INFORMATIVE) BASIS OF DESIGN – SUPPLEMENTARY CLAUSES TO EBCS EN 1990:2014 FOR RUNWAY BEAMS LOADED BY CRANES 31

A.1 General 31
A.2 Ultimate limit states 31
A.2.1 Combinations of actions 31
A.2.2 Partial factors 32
A.2.3 P factors for crane loads 32
A.3 Serviceability limit states 33
A.3.1Combinations of actions 33
A.3.2 Partial factors 33
A.3.3 P factor for crane actions 33
A.4 Fatigue 33

Annex B (Informative) Guidance for crane classification for fatigue 34

ONLY FOR REVIEW PURPOSE

ONLY FOR REVIEW PURPOSE

SECTION 1 GENERAL

1.1 Scope

(1) Part 3 of EBCS EN 1991:2014 specifies imposed loads (models and representative values) associated with cranes on runway beams and stationary machines which include, when relevant, dynamic effects and braking, acceleration and accidental forces.

(2) Section 1 defines common definitions and notations.

(3) Section 2 specifies actions induced by cranes on runways.

(4) Section 3 specifies actions induced by stationary machines.

1.2 Normative References

This Ethiopian Standard incorporates by dated or undated reference provisions from other publications. These normative references are cited at the appropriate places in the text and the publications are listed hereafter. For dated references, subsequent amendments to, or revisions of, any of these publications apply to this Ethiopian Standard only when incorporated in it by amendment or revision. For undated references the latest edition of the publication referred to applies (including amendments).

ES ISO 3898 Basis of design of structures - Notations. General symbols

ES ISO 2394 General principles on reliability for structures

ES ISO 8930 General principles on reliability for structures. List of equivalent terms

Note 1: The following Ethiopian Standards which are published or in preparation are cited in normative clauses:

EBCS EN 1990:2014 EBCS 0: Basis of Structural Design

ES EN 13001-1:2014 Crane safety-Part 1 General principles and requirements

ES EN 13001-2:2014 Crane safety-Part 2 Load effects

ONLY FOR REVIEW PURPOSE

1.3 Distinction between Principles and Application Rules

(1) Depending on the character of the individual clauses, distinction is made in this Part between Principles and Application Rules.

(2) The Principles comprise: general statements and definitions for which there is no alternative, as well as requirements and analytical models for which no alternative is permitted unless specifically stated.

(3) The Principles are identified by the letter P following the paragraph number.

(4) The Application Rules are generally recognized rules which comply with the Principles and satisfy their requirements.

(5) It is permissible to use alternative design rules different from the Application Rules given in EBCS EN 1991-3:2014 for works, provided that it is shown that the alternative rules accord with the relevant Principles and are at least equivalent with regard to the structural safety, serviceability and durability which would be expected when using the Ethiopian Codes.

Note: If an alternative design rule is substituted for an Application Rule, the resulting design cannot be claimed to be wholly in accordance with EBCS EN 1991-3:2014 although the design will remain in accordance with the Principles of EBCS EN 1991-3:2014. When EBCS EN 1991-3:2014 is used in respect of a property listed in an Annex Z of a product standard or an ETAG, the use of an alternative design rule may not be acceptable for CE marking.

(6) In this Part the Application Rules are identified by a number in brackets, e.g. as this clause.

1.4 Terms and definitions

For the purposes of this Ethiopian Standard, the terms and definitions given in ES ISO 2394, ES ISO 3898, ES ISO 8930 and the following apply. Additionally for the purposes of this standard a basic list of terms and definitions is provided in EBCS EN 1990:2014, 1.5.

1.4.1 Terms and definitions specific for hoists and cranes on runway beams

1.4.1.1 Dynamic factor:
factor that represents the ratio of the dynamic response to the static one.

1.4.1.2 Selfweight QC of the crane:
selfweight of all fixed and movable elements including the mechanical and electrical equipment of a crane structure, however without the lifting attachment and a portion of the suspended hoist ropes or chains moved by the crane structure, see 1.4.1.3.

1.4.1.3 Hoistload QH:
it includes the masses of the payload, the lifting attachment and a portion of the suspended hoist ropes or chains moved by the crane structure, see Figure 1.1.

COPY FOR REVIEW PURPOSE

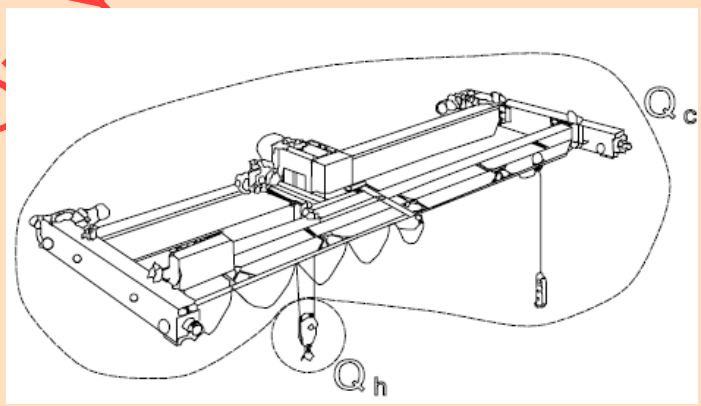

Figure 1.1: Definition of the hoist load and the selfweight of a crane

1.4.1.4 Crab:
part of an overhead travelling crane that incorporates a hoist and is able to travel on rails on the top of the crane bridge.

1.4.1.5 Crane bridge:
part of an overhead travelling crane that spans between the crane runway beams and supports the crab.

1.4.1.6 Guidance means:
system used to keep a crane aligned on a runway, through horizontal reactions between the crane and the runway beams. The guidance means can consist of flanges on the crane wheels or a separate system of guide rollers operating on the side of the crane rails or the side of the runway beams.

1.4.1.7 Hoist:
a machine for lifting loads.

1.4.1.8 Hoist block:
an underslung trolley that incorporates a hoist and is able to travel on the bottom flange of a beam, either on a fixed runway (as shown in Figure 1.2) or under the bridge of an overhead travelling crane (as shown in Figures 1.3 and 1.4).

1.4.1.9 Overhead travelling crane:
a machine for lifting and moving loads, that moves on wheels along overhead crane runway beams. It incorporates one or more hoists mounted on crabs or underslung trolleys.

1.4.1.10 Runway beam for hoist block:
Crane runway beam provided to support a monorail hoist block that is able to travel on its bottom flange, see Figure 1.2.

ON VIEW PURPOSE

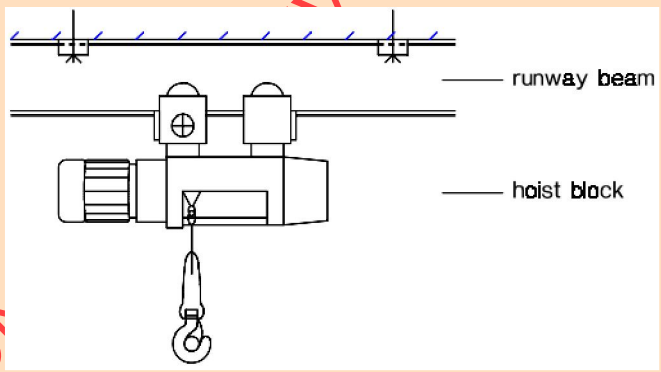

Figure 1.2: Runway beam with hoist block

1.4.1.11 Underslung crane:
Overhead travelling crane that is supported on the bottom flanges of the crane runway beams, see Figure 1.3.

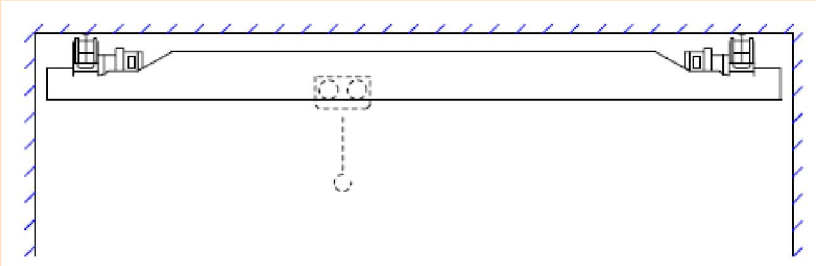

Figure 1.3: Underslung crane with hoist block

1.4.1.12 Top-mounted crane:
Overhead travelling crane that is supported on the top of the crane runway beam. It usually travels on rails, but sometimes travels directly on the top of the beams, see Figure 1.4.

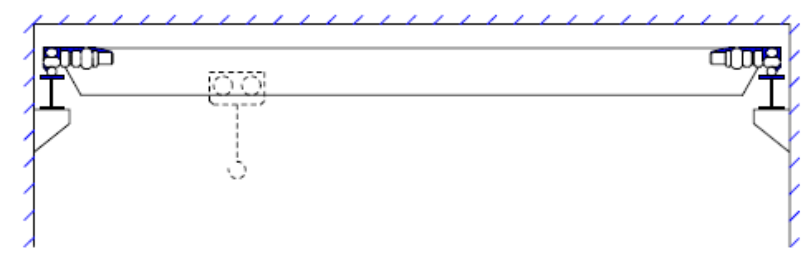

Figure 1.4: Top mounted crane with hoist block

1.4.2 Terms and definitions specific for actions induced by machines

1.4.2.1 Natural frequency:
the frequency of free vibration on a system. For a multiple degree-of-freedom system, the natural frequencies are the frequencies of the normal modes of vibrations.

1.4.2.2 Free vibration:
the vibration of a system that occurs in the absence of forced vibration.

1.4.2.3 Forced vibration:
the vibration of a system if the response is imposed by the excitation.

1.4.2.4 Damping:
the dissipation of energy with time or distance.

1.4.2.5 Resonance:
resonance of a system in forced harmonic vibration exists when any change, however small, in the frequency of excitation causes a decrease in the response of the system.

1.4.2.6 Mode of vibration:
in a system undergoing vibration, a mode of vibration is a characteristic pattern assumed by the system in which the motion of every particle is simple harmonic with the same frequency. Two or more modes may exist concurrently in a multiple degree of freedom system. A normal (natural) mode of vibration is a mode of vibration that is uncoupled from other modes of vibration of a system.

ONLY FOR REVIEW PURPOSE

1.5 Symbols

(1) For the purposes of this Ethiopian standard, the following symbols apply.

Note: The notation used is based on ES ISO 3898: 1997.

(2) A basic list of symbols is provided in EBCS EN 1990:2014 clause 1.6 and the additional notations below are specific to this part of EBCS EN 1991:2014.

F_k characteristic value of a crane action
F_w Forces caused by in service wind

H_B buffer force
H_L longitudinal loads caused by acceleration and deceleration
H_S horizontal loads caused by skewing
H_T transverse loads caused by acceleration and deceleration
H_{TA} tilting force
K drive force
Q_c selfweight of the crane
Q_h hoistload
Q_T Test load

Latin lower case letters
h distance between the instantaneous slide pole and means of guidance
k_Q load spectrum factor
P span of the crane bridge
m_c mass of the crane
m_w number of single wheel drives
n number of runway beams
n_r number of runway beams

Greek lower case letters
∀ skewing angle
β damage equivalent factor
: friction factor
v_i dynamic factor
v_{fat} damage equivalent dynamic impact factor

ONLY FOR REVIEW PURPOSE

SECTION 2 ACTIONS INDUCED BY HOISTS AND CRANES ON RUNWAY BEAMS

2.1 Field of application

(1) This section specifies actions (models and representative values) induced by:

- underslung trolleys on runways, see 2.5.1 and 2.5.2;
- overhead travelling cranes, see 2.5.3 and 2.5.4.

(2) The methods prescribed in this section are compatible with the provisions in ES EN 13001-1:2014 and ES EN 13001-2:2014, to facilitate the exchange of data with crane suppliers.

Note: Where the crane supplier is known at the time of design of the crane runway, more accurate data may be applied for the individual project.

2.2 Classifications of actions

2.2.1 General

(1)P Actions induced by cranes are classified as variable and accidental actions which are represented by various models.

2.2.2 Variable actions

(1) For normal service conditions variable crane actions result from variation in time and location. They include gravity loads including hoist loads, inertial forces caused by acceleration/deceleration and by skewing and other dynamic effects.

(2) The variable crane actions should be separated in variable vertical crane actions caused by the selfweight of the crane and the hoist load and in variable horizontal crane actions caused by acceleration or deceleration or by skewing or other dynamic effects.

(3) The various representative values of variable crane actions are characteristic values composed of a static and a dynamic component.

(4) Dynamic components induced by vibration due to inertial and damping forces are in general accounted by dynamic factors φ to be applied to the static action values.

$$F_k = \varphi_i \, F \qquad (2.1)$$

where:

F_k is the characteristic value of a crane action;
φ_i is the dynamic factor, see Table 2.1;
F is the static component of a crane action.

(5) The various dynamic factors and their application are listed in Table 2.1.

(6) The simultaneity of the crane load components may be taken into account by considering groups of loads as identified in Table 2.2. Each of these groups of loads should be considered as defining one characteristic crane action for the combination with non-crane loads.

ONLY FOR REVIEW PURPOSE

Note: The grouping provides that only one horizontal crane action is considered at a time.

2.2.3 Accidental actions

(1) Cranes may generate accidental actions due to collision with buffers (buffer forces) or collision of lifting attachments with obstacles (tilting forces). These actions should be considered for the structural design where appropriate protection is not provided.

(2) Accidental actions described in 2.11 refer to common situations. They are represented by various load models defining design values (i.e. to be used with (A = 1.0) in the form of equivalent static loads.

(3) The simultaneity of accidental crane load components may be taken into account by considering groups of loads as identified in Table 2.2. Each of these groups of loads defines one crane action for the combination of non-crane loads.

ONLY FOR REVIEW PURPOSE

Table 2.1: Dynamic factors

Dynamic factors	Effects to be considered	To be applied to
v_1	-excitation of the crane structure due to lifting the hoist load off the ground	selfweight of the crane
v_2 or v_3	-dynamic effects of transferring the hoistload from the ground to the crane -dynamic effect of sudden release of the payload if for example grabs or magnets are used	hoistload
v_4	dynamic effects induced when crane is travelling on rail tracks or runways	selfweight of the crane and hoistload
v_5	dynamic effects caused by drive forces	drive forces
v_6	when a test load is moved by the drives in the way the crane is used	test load
v_7	considers the dynamic elastic effects of impact on buffers	buffer loads

Table 2.2: Groups of loads and dynamic factors to beconsidered as one characteristic crane action

		Symbol	Section	Groups of loads									
				ULS							SLS	Acci-dental	
				1	2	3	4	5	6	7	8	9	10
1	Selfweight of crane	Q_C	2.6	v_1	v_1	1	v_4	v_4	v_4	1	v_1	1	1
2	Hoist load	Q_H	2.6	v_2	v_3	-	v_4	v_4	v_4	01)	-	1	1
3	Acceleration of crane bridge	H_L, H_T	2.7	v_5	v_5	v_5	v_5	-	-	-	v_5	-	-
4	Skewing of crane bridge	H_S	2.7	-	-	-	-	1	-	-	-	-	-
5	Acceleration or braking of crab or hoist block	H_{T3}	2.7	-	-	-	-	-	1	-	-	-	-
6	In service wind	F_W *	Annex A	1	1	1	1	1	-	-	1	-	-
7	Test load	Q_T	2.10	-	-	-	-	-	-	-	v_6	-	-
8	Buffer force	H_B	2.11	-	-	-	-	-	-	-	-	v_7	-
9	Tilting force	H_{TA}	2.11	-	-	-	-	-	-	-	-	-	1

1) 0 is the part of the hoist load that remains when the payload is removed, but is not included in the selfweight of the crane.

2.3 Design situations

(1)P The relevant actions induced by cranes shall be determined for each design situation identified in accordance with EBCS EN 1990:2014.

(2)P Selected design situations shall be considered and critical load cases identified. For each critical load case the design values of the effects of actions in combination shall be determined.

(3) Multiple crane actions from several cranes are given in 2.5.5.

(4) Combination rules for crane actions with other actions are given in annex A.

(5) For the fatigue verification fatigue load models are given in 2.12.

(6) In case tests are performed with cranes on the supporting structures for the serviceability limit state verification, the test loading model of the crane is specified in 2.10.

2.4 Representation of crane actions

(1) The actions to be considered should be those exerted on the crane runway beams by the wheels of the cranes and possibly by guide rollers or other guidance means.

(2) Horizontal forces on crane supporting structures arising from horizontal movement of monorail hoist cranes and crane hoists should be determined from 2.5.2, 2.5.4 and 2.7

ONLY FOR REVIEW PURPOSE

2.5 Load arrangements

2.5.1 Vertical loads from monorail hoist blocks underslung from runway beams

(1) For normal service conditions, the vertical load should be taken as composed of the selfweight of the hoist block, the hoistload and the dynamic factor, see Table 2.1 and Table 2.2.

2.5.2 Horizontal loads from monorail hoist blocks underslung from runway beams

(1) In the case of fixed runway beams for monorail underslung trolleys, in the absence of a more accurate value, the horizontal loads should be taken as 5% of the maximum vertical wheel load, neglecting the dynamic factor.

(2) This also applies to horizontal loads in the case of swinging suspended runway beams.

2.5.3 Vertical loads from overhead travelling cranes

(1) The relevant vertical wheel loads from a crane on a runway beam, should be determined by considering the load arrangements illustrated in Figure 2.5, using the characteristic values given in 2.6.

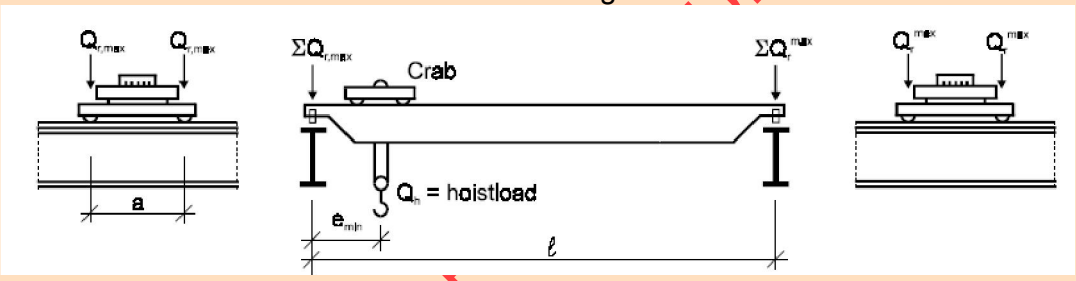

a) Load arrangement of the loaded crane to obtain the maximum loading on the runway beam

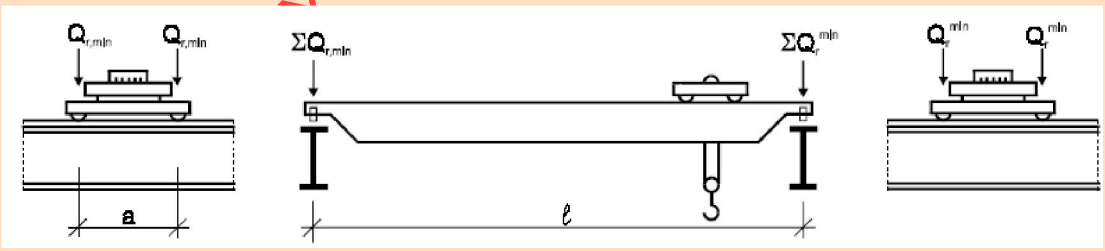

b) Load arrangement of the unloaded crane to obtain the minimum loading on the runway beam

Figure 2.5: Load arrangements to obtain the relevant vertical actions to the runway beams

where:

$Q_{r,max}$ is the maximum load per wheel of the loaded crane

Q_r is the accompanying load per wheel of the loaded crane

$EQ_{r,max}$	is the sum of the maximum loads $Q_{r,}^{max}$ per runway of the loaded crane
EQr^{max}	is the accompanying sum of the maximum loads Q_r^{max} per runway of the loaded crane
$Q_{r,}^{min}$	is the minimum load per wheel of the unloaded crane
Qr^{min}	is the accompanying load per wheel of the unloaded crane
$EQ_{r,min}$	is the sum of the minimum loads $Q_{r,min}$ per runway of the unloaded crane
EQ_r^{min}	is the accompanying sum of the minimum loads Q_r^{min} per runway of the unloaded crane
$Q_{r,nom}$	is the nominal hoistload

(2) The eccentricity of application e of a wheel load Q_r to a rail should be taken as equal to a quarter of the width of the rail head b_r, see Figure 2.6.

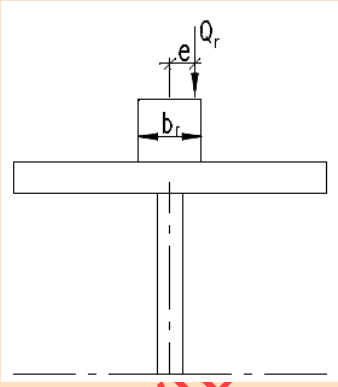

Figure 2.6: Eccentricity of the load introduction

ONLY FOR REVIEW PURPOSE

2.5.4 Horizontal loads from overhead travelling cranes

(1) The following types of horizontal loads from overhead travelling cranes should be taken into account:

a) horizontal loads caused by acceleration or deceleration of the crane in relation to its movement along the runway beam, see 2.7.2;

b) horizontal loads caused by acceleration or deceleration of the crab or underslung trolley in relation to its movement along the crane bridge, see 2.7.5;

c) horizontal loads caused by skewing of the crane in relation to its movement along the runway beam, see 2.7.4;

d) buffer forces related to crane movement, see 2.11.1;

e) buffer forces related to movement of the crab or underslung trolley, see 2.11.2.

(2) Unless otherwise specified, only one of the five types of horizontal load (a) to (e) listed in (1) should be included in the same group of simultaneous crane load components, see Table 2.2.

(3) For underslung cranes the horizontal loads at the wheel contact surface should be taken as at least 10% of the maximum vertical wheel load neglecting the dynamic component unless a more accurate value is justified.

(4) Unless otherwise specified, the longitudinal horizontal wheel forces $H_{L,i}$ and the transverse horizontal wheel forces $H_{T,i}$ caused by acceleration and deceleration of masses of the crane or the crab etc., should be applied as given in Figure 2.7. The characteristic values of these forces are given in 2.7.2.

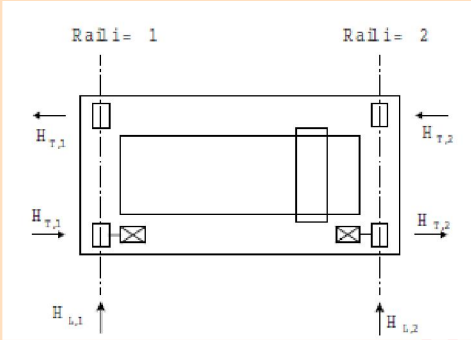

Figure 2.7: Load arrangement of longitudinal and transverse horizontal wheel forces caused by acceleration and deceleration

Note: These forces do not include the effects of oblique hoisting due to misalignment of load and crab because in general oblique hoisting is forbidden. Any effects of unavoidable small values of oblique hoisting are included in the inertial forces.

(5) The longitudinal and transverse horizontal wheel forces $H_{S,i,j,k}$ and the guide force S caused by skewing may occur at the guidance means of cranes or trolleys while they are travelling or traversing in steady state motion, see Figure 2.8. These loads are induced by guidance reactions which force the wheel to deviate from their free-rolling natural travelling or traverse direction. The characteristic values are given in 2.7.4.

FOR REVIEW PURPOSE

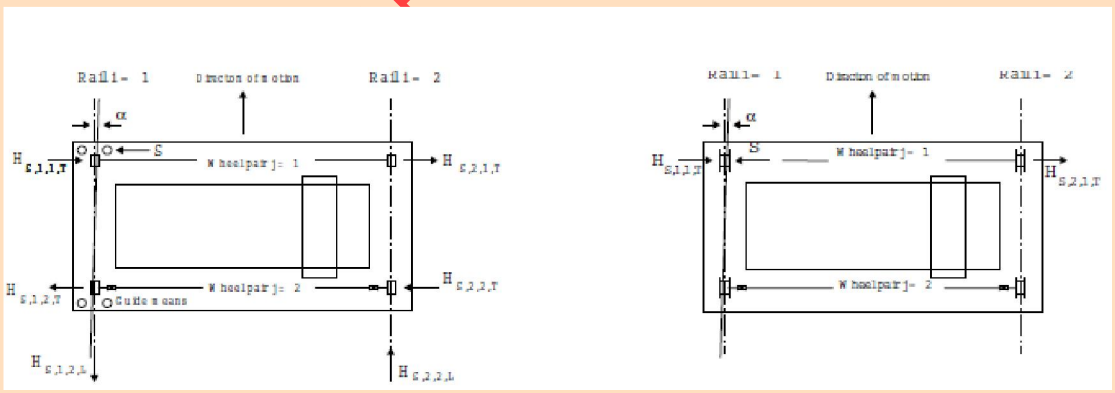

a) with separate guidance means b) with guidance by means of wheel flanges

Note: The direction of the horizontal loads depends on the type of guidance means, the direction of motion and on the type of wheel drive.

Figure 2.8: Load arrangement of longitudinal and transverse horizontal wheel forces caused by skewing

2.5.5 Multiple crane action

(1)P Cranes that are required to operate together shall be treated as a single crane action.

(2) If several cranes are operating independently, the maximum number of cranes taken into account as acting simultaneously should be as given in Table 2.3.

	Cranes to each runway	Cranes in each shop bay	Cranes in multi – bay buildings	
	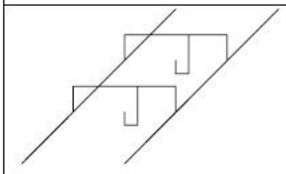	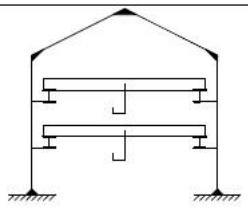	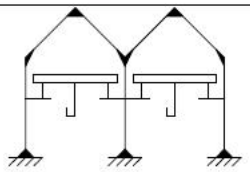	
Vertical crane action	3	4	4	2
Horizontal crane action	2	2	2	2

Table 2.3: Maximum number of cranes to be considered in the most unfavorable position

2.6 Vertical crane loads - characteristic values

(1) The characteristic values of the vertical loads from cranes on crane supporting structures should be determined as indicated in Table 2.2.

(2)P For the selfweight of the crane and the hoistload, the nominal values specified by the crane supplier shall be taken as characteristic values of the vertical loads.

Table 2.4: Dynamic factors v_i for vertical loads

v_1	$0.9 < v_1 < 1.1$ The two values 1.1 and 0.9 reflect the upper and lower values of the vibrational pulses.
v_2	$v_2 = v_{2,min} + \beta_2 v_h$ v_h -steady hoisting speed in [m/s] $v_{2,min}$ and β_2 see Table 2.5
v_3	$\varphi_3 = 1 - \frac{\Delta_m}{m}(+\beta_3)$ where Δ_m released or dropped part of the load m total hoisting load $\beta_3 = 0.5$ for cranes equipped with grabs or similar slow-release devices $\beta_3 = 1.0$ for cranes equipped with magnets or similar rapid-release devices
v_4	$v_4 = 1.0$ provided that the tolerances for rail tracks as specified in EBCS EN 1993-6:2014 are observed.

ONLY FOR REVIEW

(3) If the dynamic factors v_1, v_2, v_3 and v_4 as specified in Table 2.1 are not included in the specifications of the crane supplier the indications in Table 2.4 may be used.

(4) For in-service wind reference should be made to annex A.

Table 2.5: Values of β_2 and v2min

Hoisting class of appliance	β_2	$v_{2,min}$
HC1	0,17	1,05
HC2	0,34	1,10
HC3	0,51	1,15
HC4	0,68	1,20
Note: Cranes are assigned to Hoisting Classes HC1 to HC4 to allow for the dynamic effects of transferring the load from the ground to the crane. The selection depends on the particular type of crane, see recommendation in annex B.		

2.7 Horizontal crane loads - characteristic values

2.7.1 General

(1)P For the acceleration and the skewing effects, the nominal values specified by the crane supplier shall be taken as characteristic values of the horizontal loads.

(2) The characteristic values of the horizontal loads may be specified by the crane supplier or be determined using 2.7.2 to 2.7.5.

2.7.2 Longitudinal loads $H_{L,i}$ and transverse loads $H_{T,i}$ caused by acceleration and deceleration of the crane

(1) The longitudinal loads $H_{L,i}$ caused by acceleration and deceleration of crane structures result from the drive force at the contact surface between the rail and the driven wheel, see Figure 2.9.

(2) The longitudinal loads $H_{L,i}$ applied to a runway beam may be calculated as follows:

$$H_{L,i} = \varphi_5 k \frac{1}{n_r} \qquad (2.2)$$

where:

n_r is the number of runway beams;
K is the drive force according to 2.7.3;
φ_5 is the dynamic factor, see Table 2.6;
i is the integer to identify the runway beam (i = 1.2).

ONLY FOR REVIEW PURPOSE

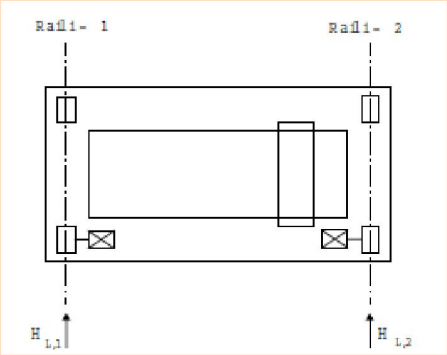

Figure 2.9: Longitudinal horizontal loads HL,i

(3) The moment M resulting from the drive force which should be applied at the center of mass is equilibrated by transverse horizontal loads $H_{T,1}$ and $H_{T,2}$, see Figure 2.10. The horizontal loads may be obtained as follows:

$$H_{T,1} = \varphi_5 \xi_2 \frac{M}{a} \quad (2.3)$$

$$H_{T,2} = \varphi_5 \xi_1 \frac{M}{a} \quad (2.4)$$

where

$\xi_1 = \frac{\sum Q_{r,max}}{\sum Q_r}$

ξ_2 = 1-ξ_1;

EQ_r = $EQ_{r,max}$ + EQ_r^{max};

$EQ_{r,max}$ see Figure 2.1;

EQ_r^{max} see Figure 2.1;

a is the spacing of the guide roller or the wheel flanges;

M = K P_s;

P_s = (ξ_1 - 0.5) P;

P is the span length of the crane bridge;

φ_5 is the dynamic factor, see Table 2.6;

K is the drive force see 2.7.3.

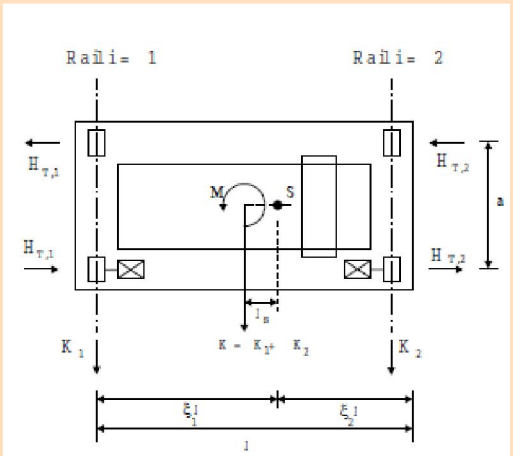

Figure 2.10: Definition of the transverse loads $H_{T,i}$

ONLY FOR REVIEW PURPOSE

(4) For curved runway beams the resulting centrifugal force should be multiplied by the dynamic factor v_5.

(5) If the dynamic factor v_5 is not included in the specification documents of the crane supplier indications are given in Table 2.6.

Table 2.6: Dynamic factor V_5

$v_5 = 1.0$	for centrifugal forces
$1 < v_5 \leq 1.5$	correspond to systems in which forces change smoothly
$1,5< v_5 \leq 2.0$	when sudden changes occur
$v_5 = 3.0$	for drives with considerable backlash

2.7.3 Drive force K

(1) The drive force K on a driven wheel should be taken such that wheel spin is prevented.

(2) The drive force K may be calculated as follows:

$$K = K_1 + K_2 = EQ^*_{r,min} \qquad (2.5)$$

where:

: is the friction factor, see (3);

- for single wheel drive: $EQ^*_{r,min} = m_w Q_{r,min}$, with m_w = number of single wheel drives;
- for central wheel drive: $EQ^*_{r,min} = Q_{r,min} + Q_r^{min}$;

Note: Modern cranes do not normally have central wheel drive.

ONLY FOR REVIEW PURPOSE

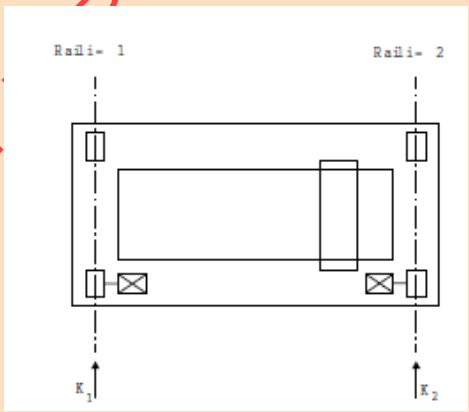

Figure 2.11: Definition of the drive force

(3) The friction factor: may be taken as:

- : = 0.2 for steel - steel;
- : = 0.5 for steel - rubber.

2.7.4 Horizontal loads $H_{S,i,j,k}$ and the guide force S caused by skewing of the crane

(1) The guide force S and the transverse forces $H_{S,i,j,k}$ caused by skewing may be obtained from:

$S = F8_{sj}\ EQ_r$ (2.6)

$H_{s1j,L}$ = f $8_{S,1j,L}$ EQ_r (index j is the wheel pair with the wheel drive (2.7)

$H_{s,2j,L}$ = f $8_{S,2j,L}$ EQ_r (index j is the wheel pair with the wheel drive (2.8)

$H_{s,1j,T}$ = f $8_{S,1j,T}$ EQ_r (2.9)

$H_{s,2j,T}$ = f $8_{S,2j,T}$ EQ_r (2.10)

Where:

f is the non-positive factor, see (2);
$8_{s,ij,k}$ is the force factors, see (4);
i is the rail i;
j is the wheel pair j;
k is the direction of the force (L = longitudinal, T = transverse).

(2) the non-positive factor may be determined from:

$f = 0.3\ (1\text{-}\exp\ (\text{-}250\ \forall)) \leq 0.3$ (2.11)

where:
α is the skewing angle, see (3).

(3) The skewing angle α, see Figure 2.12, which should be equal to or less than 0.015 rad, should be chosen taking into account the space between the guidance means and the rail as well as reasonable dimensional variation and wear of the appliance wheels and the rails. It may be determined as follows:

$\alpha = \alpha_{F+}\alpha_v + \alpha_o \leq 0.015\ rad$ (2.12)

where:

$\alpha_{F,}\alpha_v$ and α_o are defined in Table 2.7.

Table 2.7: Definition of $\alpha_{F,}\alpha_v$ and α_o

Angles α_i	Minimum values of $\forall_i$
$\alpha_F = \frac{0.75x}{a}$	0.75x ≥ 5 mm for guide rollers
	0.75x ≥10 mm for wheel flanges

ONLY FOR REVIEW PURPOSE

$\alpha_V = \frac{y}{a}$	y ≥0.03b in mm for guide rollers
	y ≥0.10b in mm for wheel flanges
α_o	α_o = 0.001
Where: a is the spacing of the guide rollers or extreme wheel flanges on the guiding rail; b is the width of the rail head; x is the track clearance between the rail and guide means (lateral slip); y is the wear of the rail and guide means; α_o is the tolerances of wheel and rail directions	

(4) The force factor $8_{S,i,j,k}$ depends on the combination of the wheel pairs and the distance *h* between the instantaneous center of rotation and the relevant guidance means, which is the front guidance means in the direction of motion, see Figure 2.12. The value of the distance *h* may be taken from Table 2.8. The force factor $8_{S,i,j,k}$ may be determined from the expressions given in Table 2.9.

ONLY FOR PURPOSE

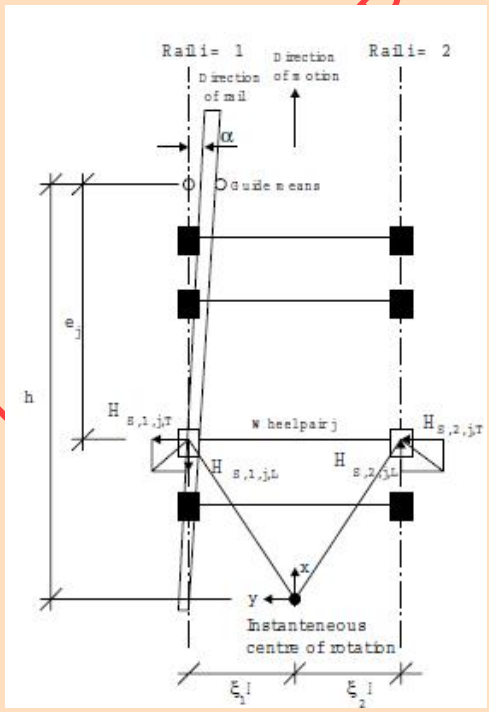

Figure 2.12: Definition of angle α and the distance *h*

Table 2.8: Determination of the distance *h*

	Combination of wheel pairs		*h*
	coupled (c)	independent (i)	
Fixed/Fixed FF	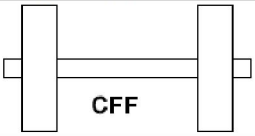	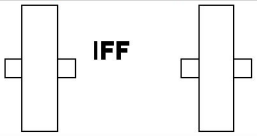	$\frac{m\xi_1\xi_2\ell^2 + \Sigma e_j^2}{\Sigma e_j}$
Fixed/Movable FM	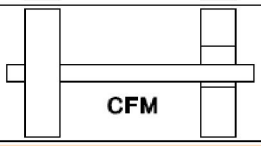	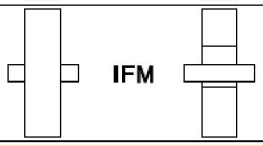	$\frac{m\xi_1\ell^2 + \Sigma e_j^2}{\Sigma e_j}$

Where:

h is the distance between the instantaneous center of rotation and the relevant guidance means;

m is the number of pairs of coupled wheels (m = 0 for independent wheel pairs);

$\xi_1 l$ is the distance of the instantaneous center of rotation from rail 1;

$\xi_2 l$ is the distance of the instantaneous center of rotation from rail 2;

l is the span of the appliance

e_j is the distance of the wheel pair j for the relevant guidance means;

VIEW PURPOSE

Table 2.9: Definition of $\delta_{S,i,j,k}$ – values

System	$\delta_{S,j}$	$\delta_{S,1,j,L}$	$\delta_{S,1,j,T}$	$\delta_{S,2,j,L}$	$\delta_{S,2,j,T}$
CFF	$1 - \frac{\Sigma e_j}{nh}$	$\frac{\xi_1\xi_2}{n}\frac{\ell}{h}$	$\frac{\xi_2}{n}\left(1 - \frac{e_j}{h}\right)$	$\frac{\xi_1\xi_2}{n}\frac{\ell}{h}$	$\frac{\xi_1}{n}\left(1 - \frac{e_j}{h}\right)$
IFF		0	$\frac{\xi_2}{n}\left(1 - \frac{e_j}{h}\right)$	0	$\frac{\xi_1}{n}\left(1 - \frac{e_j}{h}\right)$
CFM	$\xi_2\left(1 - \frac{\Sigma e_j}{nh}\right)$	$\frac{\xi_1\xi_2}{n}\frac{\ell}{h}$	$\frac{\xi_2}{n}\left(1 - \frac{e_j}{h}\right)$	$\frac{\xi_1\xi_2}{n}\frac{\ell}{h}$	0
IFM		0	$\frac{\xi_2}{n}\left(1 - \frac{e_j}{h}\right)$	0	0

Where:

h is the distance between the instantaneous center of rotation and the relevant guidance means;

m is the number of pairs of coupled wheels (m = 0 for independent wheel pairs);

$\xi_1 l$ is the distance of the instantaneous center of rotation from rail 1;

$\xi_2 l$ is the distance of the instantaneous center of rotation from rail 2;

l is the span of the appliance

e_j is the distance of the wheel pair j for the relevant guidance means;

2.7.5 Horizontal loads $H_{T,3}$ caused by acceleration or deceleration of the crab

(1) The horizontal load $H_{T,3}$ caused by acceleration or deceleration of the crab or trolley may be assumed to be covered by the horizontal load $H_{B,2}$ given in 2.11.2.

2.8 Temperature effects[1]

(1)P The action effects on runways due to temperature variations shall be taken into account where necessary. Non-uniform distributed temperature need not to be considered.

(2) The temperature difference for outdoor runways may be assumed to be ± 35 °K for a mean temperature of + 20 °C.

2.9 Loads on access walkways, stairs, platforms and guard rails

2.9.1 Vertical loads

(1) Unless otherwise stated, the access walkways, stairs and platforms should be loaded by a vertical load Q spread over a square surface of 0.3m × 0.3m.

(2) Where materials can be deposited a vertical load Q_k = 3 kN should be applied.

(3) If the walkways, stairs and platforms are provided for access only the characteristic value in (2) may be reduced to 1.5 kN.

(4) The vertical load Q_k may be disregarded if all structural members are subjected to crane actions.

2.9.2 Horizontal loads

(1) Unless otherwise stated, the guard rail should be loaded by a single horizontal load H_k = 0.3 kN.

(2) The horizontal load H_k may be disregarded in the case of all structural members are subjected to crane actions.

2.10 Test loads

(1) When tests are performed after erection of the cranes on the supporting structures, the supporting structure should be checked against the test loading conditions.

(2) If relevant, the crane supporting structure should be designed for these test loads.

(3)P The hoist test load shall be amplified by a dynamic factor v_6.

(4) When considering these test loads the following cases should be distinguished:

---

[1] After coordination with Part 1.7 “Thermal actions” of EBCS EN 1991:2014 these classes will be substituted by a reference of Part 1.7.

ONLY FOR REVIEW PURPOSE

– Dynamic test load: The test load is moved by the drives in the way the crane will be used. The test load should be at least 110% of the nominal hoist load.

$$\varphi_6 = 0.5\,(1 + v_2) \qquad (2.13)$$

– Static test load:

The load is increased for testing by loading the crane without the use of the drives. The test load should be at least 125% of the nominal hoist load.

$$\varphi_6 = 1.0 \qquad (2.14)$$

2.11 Accidental actions

2.11.1 Buffer forces $H_{B,1}$ related to crane movement

(1)P Where buffers are used, the forces on the crane supporting structure arising from collision with the buffers shall be calculated from the kinetic energy of all relevant parts of the crane moving at 0.7 to 1.0 times the nominal speed.

(2) The buffer forces multiplied by φ_7 according to Table 2.10 to make allowance for dynamic effects may be calculated taking into account the distribution of relevant masses and the buffer characteristics, see Figure 2.13.

$$H_{B,I} = \varphi_7 v_1 \sqrt{m_c S_B} \qquad (2.15)$$

where:

φ_7 see Table 2.10;

v_1 is70 % of the long travel velocity [m/s];

m_c is the mass of the crane and the hoist load [kg];

S_B is the spring constant of the buffer [N/m].

Table 2.10: Dynamic factor v_7

$\varphi_7 = 1.25$	if $0.0 \leq \xi \leq 0.5$
$\varphi_7 = 1.25 + 0.7\,(\xi - 0.5)$	if $0.5 \leq \xi \leq 1$
ξ may be approximately determined from Figure 2.14	

ONLY FOR REVIEW PURPOSE

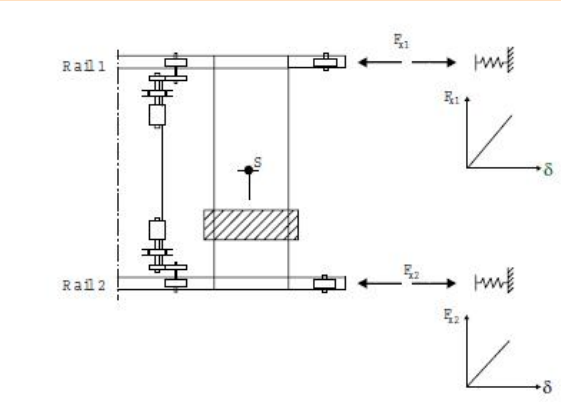

Figure 2.13: Buffer forces

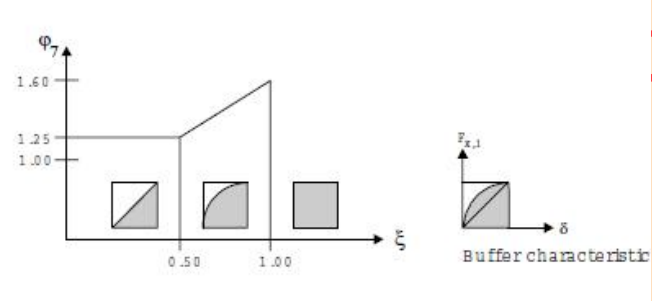

Figure 2.14: Definition of ξ

ONLY FOR REVIEW PURPOSE

2.11.2 Buffer forces $H_{B,2}$ related to movements of the crab

(1) Provided that the payload is free to swing, the horizontal load $H_{B,2}$ representing the buffer forces related to movement of the crab or trolley may be taken as 10 % of the sum of the hoist load and the weight of the crab or trolley. In other cases the buffer force should be determined as for crane movement, see 2.11.1.

2.11.3 Tilting forces

(1)P If a crane with horizontally restrained loads can tilt when its load or lifting attachment collides with an obstacle, the resulting static forces shall be considered.

2.12 Fatigue loads

2.12.1 Single crane action

(1)P Fatigue loads shall be determined such that the operational conditions of the distribution of hoistloads and the effects of the variation of crane positions to the fatigue details are duly considered.

(2) For normal service condition of the crane the fatigue loads may be expressed in terms of fatigue damage equivalent loads Q_e that may be taken as constant for all crane positions to determine fatigue load effects.

(3) The fatigue damage equivalent load Q_e may be determined such that it includes the effects of the stress histories arising from the specified service conditions and the ratio of the absolute number of load cycles during the expected design life of the structure to the reference value N = $2.0X10^6$ cycles.

Table 2.11: Classification of the fatigue actions from cranes according to ES EN 13001-1:2014

class of load spectrum		Q_0	Q_1	Q_2	Q_3	Q_4	Q_5
		kQ ≤ 0.0313	0.0313 < kQ ≤ 0.0625	0.0625 < kQ ≤ 0.125	0.125 < kQ ≤ 0.25	0.25 < kQ ≤ 0.5	0.5 < kQ ≤ 1.0
class of total number of cycles							
U_0	$C \leq 1.6X10^4$	S_0	S_0	S_0	S_0	S_0	S_0
U_1	$1.6X10^4 < C \leq 3.15X10^4$	S_0	S_0	S_0	S_0	S_0	S_1
U_2	$3.15X10^4 < C \leq 6.30X10^4$	S_0	S_0	S_0	S_0	S_1	S_2
U_3	$6.30X10^4 < C \leq 1.25X10^5$	S_0	S_0	S_0	S_1	S_2	S_3
U_4	$1.25X10^5 < C \leq 2.50X10^5$	S_0	S_0	S_1	S_2	S_3	S_4
U_5	$2.50X10^5 < C \leq 5.00X10^5$	S_0	S_1	S_2	S_3	S_4	S_5
U_6	$5.00X10^5 < C \leq 1.00X10^6$	S_1	S_2	S_3	S_4	S_5	S_6
U_7	$1.00X10^6 < C \leq 2.00X10^6$	S_2	S_3	S_4	S_5	S_6	S_7
U_8	$2.00X10^6 < C \leq 4.00X10^6$	S_3	S_4	S_5	S_6	S_7	S_8
U_9	$4.00X10^6 < C \leq 8.00 \leq 10^6$	S_4	S_5	S_6	S_7	S_8	S_9

where:

kQ is a load spectrum factor for all tasks of the crane;

C is the total number of working cycles during the design life of the crane.

Note: The classes S_i are classified by the load effect history parameter *s* in ES EN 13001-1:2014 which is defined as: $s = < kQ$

where:

kQ is the load spectrum factor;

< is the number of load cycles *C* related to $2.0x10^6$ load cycles.

The classification is based on a total service life of 25 years.

ONLY FOR REVIEW PURPOSE

(4) The fatigue load may be specified as:

$$Q_{e,i} = v_{fat}\, 8_i\, Q_{max,i} \qquad (2.16)$$

where:

$Q_{max,i}$ is the maximum value of the characteristic vertical wheel load *i*;

$\lambda = \lambda_{1,i}\ \lambda_{2i}$ is the damage equivalent factor to make allowance for the relevant standardized fatigue load spectrum and absolute number of load cycles in relation to $N = 2.0 \times 10^6$ cycles;

$$\lambda_{1,i} = \sqrt[m]{kQ} = \left[\sum_j \left(\left(\frac{\Delta Q_{i,j}}{max\Delta Q_i}\right)\right)^m \frac{n_{i,j}}{\sum n_{i,j}}\right]^{1/m} \quad (2.17)$$

$$\lambda_{2,i} = \sqrt[m]{v} = \left[\frac{\sum n_{i,j}}{N_i}\right]^{1/m} \quad (2.18)$$

where:

$\Delta Q_{i,j}$ is the load amplitude of range j for wheel i: $\Delta Q_{i,j} = Q_{i,j} - Q_{min,i}$;

$max\Delta Q_i$ is the maximum load amplitude for wheel i:$max\Delta Q_{max,i} - Q_{min,i}$;

kQ, ν is the damage equivalent factors;

m is the slope of the fatigue strength curve;

v_{fat} is the damage equivalent dynamic impact factor, see (7);

i is the number of the wheel

N_i is 2×10^6

(5) For determining the 8-value the use of cranes may be classified according to the load spectrum and the total number of load cycles as indicated in Table 2.11.

(6) 8-values may be taken from Table 2.12 according to the crane classification.

Table 2.12: 8_i-values according to the classification of cranes

classes S	S_0	S_1	S_2	S_3	S_4	S_5	S_6	S_7	S_8	S_9
normal stresses	0.198	0.250	0.315	0.397	0.500	0.630	0.794	1.00	1.260	1.587
shear stresses	0.379	0.436	0.500	0.575	0.660	0.758	0.871	1.00	1.149	1.320

Note 1: In determining the 8-values standardized spectra with a Gaussian distribution of the load effects, the Miner rule and fatigue strength S-N lines with a slope m = 3 for normal stresses and m = 5 for shear stress have been used.

Note 2: In case the crane classification is not included in the specification documents of the crane client indications are given in Annex B.

(7) The damage equivalent dynamic impact factor v_{fat} for normal conditions may be taken as:

$$\varphi_{fat,1} = \frac{1+\varphi_1}{2} \text{ and } \varphi_{fat,2} = \frac{1+\varphi_2}{2} \quad (2.19)$$

ONLY FOR REVIEW PURPOSE

2.12.2 Stress range effects of multiple wheel or crane actions

(1) The stress range due to damage equivalent wheel loads Q_e may be determined from the evaluation of stress histories for the fatigue detail considered.

ONLY FOR REVIEW PURPOSE

SECTION 3 ACTIONS INDUCED BY MACHINERY

3.1 Field of application

(1) This section applies to structures supporting rotating machines which induce dynamic effects in one or more planes.

(2) This section presents methods to determine the dynamic behaviour and action effects to verify the safety of the structure.

Note: Though a sharp bound cannot be set, in general it may be assumed that for minor machinery with only rotating parts and weighting less than 5 kN or having a power less than 50 kW, the action effects are included in the imposed loads and separate considerations are therefore not necessary. In these cases the use of so called vibration absorbers under the supporting frame is sufficient to protect the machine and the surroundings. Examples are washing machines and small ventilators.

3.2 Classification of actions

3.2.1 General

(1)P Actions from machinery are classified as permanent, variable and accidental actions which are represented by various models.

3.2.2 Permanent actions

(1) Permanent actions during service include the selfweight of all fixed and moveable parts and static actions from service such as:

- selfweight of rotors and the hull (vertical);
- selfweight of condensators, if relevant, taking account of the water infill (vertical);
- actions from vacuum for turbines, the condensators of which are connected to the hull by compensators. (vertical and horizontal);
- drive torques of the machine transmitted to the foundation by the hull (pairs of vertical forces);
- forces from friction at the bearings induced by thermal expansion of the hull (horizontal);
- actions from selfweight, forces and moments from pipes due to thermal expansion, actions from gas; flow and gas pressure (vertical and horizontal);
- temperature effects from the machine and pipes for instance temperature differences between machine and pipes and the foundation.

(2) Permanent actions during transient stages (erection, maintenance or repair) are those from selfweight only including those from hoisting equipments, scaffolding or other auxiliary devices.

3.2.3 Variable actions

(1) Variable actions from machinery during normal service are dynamic actions caused by accelerated masses such as:

- periodic frequency dependent bearing forces due to eccentricities of rotating masses in all directions, mainly perpendicular to the axis of the rotors;

ONLY FOR REVIEW PURPOSE

- free mass forces or mass moments;
- periodic actions due to service depending on the type of machine that are transmitted by the hull or bearings to the foundations;
- forces or moments due to switching on or off or other transient procedures like for instance synchronizations.

3.2.4 Accidental actions

(1) Accidental actions may occur from:

- accidental magnification of the eccentricity of masses (for instance by fracture of blades or accidental deformation of moveable parts);
- short circuit or missynchronization between generators and machines;
- impact effects from pipes by shutting down.

3.3 Design situations

(1)P The relevant actions induced by machinery shall be determined for each design situation identified in accordance with EBCS EN 1990:2014.

(2)P Design situations shall in particular be selected for verifying that:

- the service conditions of the machinery are in compliance with the service requirements and no damage is induced to the structure supporting the machine and its foundation by accidental actions that would infringe the subsequent use of this structure for further service;
- the impact on the surroundings, for instance disturbance of sensitive equipment, is within acceptable limits;
- no ultimate limit state may occur in the structure;
- no fatigue limit state may occur in the structure.

Note: Unless specified otherwise, the serviceability requirements should be determined in contracts and/or in the design.

3.4 Representation of actions

3.4.1 Nature of the loads

(1)P In the determination of action effects a distinction shall be made between the static and the dynamic action effects.

(2)P In the static actions both those from machinery and those from the structure shall be included.

Note: The static actions from the machinery are the permanent actions defined in 3.2.2. They may be used for determining creeping effects or when limitations of static deformations are given.

(3)P The dynamic action effects shall be determined taking into account the interaction between the excitation from the machinery and the structure.

Note: The dynamic actions from the machinery are the variable actions defined in 3.2.3.

ONLY FOR REVIEW PURPOSE

(4)P Dynamic action effects shall be determined by a dynamic calculation with an appropriate modelling of the vibration system and the dynamic action.

(5) Dynamic effects may be disregarded where not relevant.

3.4.2 Modelling of dynamic actions

(1) The dynamic actions of machines with only rotating parts, for instance rotating compressors, turbines, generators and ventilators, consist of periodically changing forces which may be defined by a sinusoidal function, see Figure 3.1.

(2) A short circuit $M_k(t)$ moment may be represented by a combination of sinusoidal moment-time diagrams acting between the rotor and the hull.

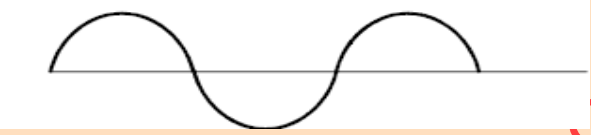

Figure 3.1 Harmonic force

3.4.3 Modelling of the machinery-structure interaction

(1)P The vibration system composed of the machine and the structure shall be modelled such, that the excitations, the mass quantities, stiffness properties and the damping are sufficiently taken into account to determine the actual dynamic behaviour.

(2) The model may be linear elastic with concentrated or distributed masses connected with springs and supported by springs.

(3) The common center of gravity of the system (for instance of the foundation and machine) should be located as near as possible to the same vertical line as the centroid of the foundation area in contact with the soil. In any case the eccentricity in the distribution of masses should not exceed 5% of the length of the side of the contact area. In addition, the center of gravity of the machine and foundation system should if possible be below the top of the foundation block.

(4) In general the three possible degrees of freedom for translations and the three degrees of freedom for rotations should be considered; it is however in general not necessary to apply a three dimensional model.

(5) The properties of the supporting medium of the foundation structure should be converted in terms of the model (springs, damping constants etc.). The required properties are:

- for soils: dynamic G-modulus and damping constants;
- for piles:dynamic spring constants in vertical and horizontal directions;
- for springs:spring constants in horizontal and vertical directions and for rubber springs the
- damping data.

ONLY FOR REVIEW PURPOSE

3.5 Characteristic values

(1) A complete survey of the static and dynamic forces for the various design situations should be supplied by the machine manufacturer together with all other machine data such as outline drawings, weights of static and moving parts, speeds, balancing etc.

(2) The following data should be made available to the designer by the machine manufacturer:

- loading diagram of the machine showing the location, magnitude and direction of all loads including dynamic loads;
- speed of the machine;
- critical speeds of the machine; – outline dimensions of the foundation;
- mass moment of inertia of the machine components;
- details of inserts and embedments;
- layout of piping, ducting etc, and their supporting details;
- temperatures in various zones during operation;
- allowable displacements at the machine bearing points during normal operation.

(3) In simple cases, the dynamic forces (free forces) for rotating machine parts may be determined as follows:

$$F_s = m_R T_s^2 e = m_R T_s (T_s e) \quad (3.1)$$

where

F_s is the free force of the rotor;
m_R is the mass of the rotor;
Ts is the circular frequency of the rotor;
e is the eccentricity of the rotor mass;
T_s e is the accuracy of balancing of the rotor, expressed as a velocity amplitude.

(4) For the accuracy of balancing the following situations should be considered:

- persistent situation:

The machine is well balanced. However with time the balance of the machines decreases to a degree that is just acceptable for normal operation. A warning system on the machine achieves, that the operator is warned in case of exceeding a certain limit. Up to that state of balance no vibration hindrance may occur to the structure and the surroundings and the requirements concerning the vibration level must be fulfilled.

- accidental situation:

The balance is completely disturbed by an accidental event: the monitoring system achieves the switch off of the machine. The structure must be strong enough to withstand the dynamic forces.

(5) In simple cases the interaction effect from the excitation of a machine with a rotating mass and the dynamic behaviour of the structure may be expressed by a static equivalent force

ONLY FOR REVIEW PURPOSE

$F_{eq} = F_s$ v (3.2)

where:

F_s is the free force of the rotor;

v is the magnification factor which depends on the ratio of the natural frequency n_e (or T_e) of the structure to the frequency of the exciting force n_s (or T_s) and the damping ratio D.

(6) For harmonically varying forces (free forces of rotating equipment) the magnification factor may be taken in the following way:

a) For small damping or far from resonance

$$v = \frac{\omega_e^2}{\omega_e^2 - \omega_s^2} \quad (3.3)$$

b) in case of resonance Te = Ts and a damping ratio D

$$v = \left[\left(1 - \frac{\omega_s^2}{\omega_e^2}\right)^2 + \left(2D\frac{\omega_s}{\omega_e}\right)^2\right]^{-1/2} \quad (3.4)$$

(7) If the time history of the short circuit moment $M_k(t)$ is not indicated by the manufacturer, the following expression may be used:

$$M_k(t) = 10M_o\left(e^{-t/0.4}sin\Omega_N t - \frac{1}{2}e^{-t/0.4}sin2\Omega_N t\right) - M_o\left(1 - e^{-t/0.15}\right) \quad (3.5)$$

where:

M_o is the nominal moment resulting from the effective power;
Ω_N is the frequency of the electric net;
t is the time [s].

(8) For natural frequencies in the range $0.95\Omega_N$ to $1.05\Omega_N$ the calculative frequencies of the electric net should be identical with these natural frequencies.

(9) As a simplification, an equivalent static action may be considered for determine moments as below:

$M_{k,eq} = 1.7, M_{k,max}$ (3.6)

where:

$M_{k,max}$ is the peak value of $M_k(t)$.

(10) In case no indication on $M_{k,max}$ is given from the manufacturer the following value may be used:

$M_{k,max} = 12\ M_o$ (3.7)

ONLY FOR REVIEW PURPOSE

3.6 Serviceability criteria

(1) Serviceability criteria in general are related to vibration movements of:

a) the axis of the machine and its bearings;
b) extreme points of the structure and the machinery.

(2) Characteristics of the movements are:

- the path amplitude A;
- the velocity amplitude $T_s A$;
- the acceleration amplitude $T_s^2 A$.

(3)P In calculating the amplitudes of the system, the translational vibrations as well as the rotational vibrations caused by the dynamic forces and moments shall be taken into account and also the spread in the stiffness properties of the foundation and the supporting medium (soil, piles).

(4) In the simple case of a one mass spring system, Figure 3.2, the path amplitudes may be calculated as follows:

$$A = \frac{F_{eq}}{k} \qquad (3.8)$$

where:

k is the spring constant of the system.

ONLY FOR REVIEW PURPOSE

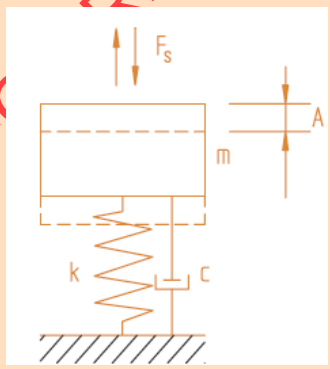

Figure 3.2: Mass spring system

ANNEX A
(INFORMATIVE)
BASIS OF DESIGN – SUPPLEMENTARY CLAUSES TO EBCS EN 1990:2014 FOR RUNWAY BEAMS LOADED BY CRANES

A.1 General

(1) This annex gives rules on partial factors for actions ((factors), and on combinations of crane loads on runway beams with permanent actions, quasistatic wind, snow and temperature actions and on the relevant P factors.

(2) If other actions need to be considered (for instance mining subsidence) the combinations should be supplemented to take them into account. The combinations should also be supplemented and adapted for the erections phases.

(3) When combining a group of crane loads together with other actions, the group of crane loads should be considered as one action.

(4) When considering combinations of actions due to crane loads with other actions the following cases should be distinguished:

(a)runways outside buildings;
(b)runways inside buildings where climatic actions are resisted by the buildings and structural elements of the buildings may also be loaded directly or indirectly by crane loads.

(5) For runways outside buildings the characteristic wind action on the crane structure and the hoisting equipment may be assessed in ES ENV 1991-2-4:2014 as characteristic force F_{wk}.

(6) When considering combinations of hoist loads with wind action, the maximum wind force compatible with crane operations should also be considered. This force F_w^* is associated with a wind speed equal to 20 m/s. The reference area $A_{ref,x}$ for the hoist load should be determined for each specific case.

(7) For runways inside buildings wind loads and snow loads on the crane structure may be neglected; however in structural parts of the building that are loaded by wind, snow and crane loads the appropriate load combinations should be carried out.

A.2 Ultimate limit states

A.2.1 Combinations of actions

(1) For each critical load case, the design values of the effects of actions should be determined by combining the values of actions which occur simultaneously in accordance with EBCS EN 1990:2014.

(2) Where an accidental action is to be considered no other accidental action nor wind nor snow action need to be considered to occur simultaneously.

ONLY FOR REVIEW PURPOSE

A.2.2 Partial factors

(1) For verifications governed by the strength of structural material or of the ground, the partial factors on actions for ultimate limit states in the persistent, transient and accidental design situations are given in Table A.1.

Note: For the design of runway beams Table A1 and the following notes cover cases STR and GEO specified for buildings in 6.4.1(1) of EBCS EN 1990:2014. For case EQU, see (2) below.

Table A.1: Partial factors

Action	Symbol	Situation	
		P/T	A
Permanent crane actions	$\gamma_{G,sup}$		1.00
- Unfavourable	$\gamma_{G,inf}$	1.35	1.00
- favourable		1.00	
Variable crane actions	$\gamma_{Q,sup}$	1.35	1.00
- unfavourable	$\gamma_{Q,inf}$		
- favourable		1.00	1.00
crane present		0.00	0.00
crane not present			
Other variable actions	γ_Q	1.50	1.00
- unfavourable		0.00	0.00
- favourable			
Accidental actions	γ_A		1.00

P - Persistent situation T - Transient situation A - Accidental situation

ONLY FOR REVIEW PURPOSE

(2) For verifications with regard to loss of static equilibrium and uplift of bearings, the favourable and unfavourable parts of variable crane actions should be considered as individual actions and unless otherwise specified (see in particular the relevant design Ethiopian Codes) the unfavourable and favourable parts should be associated with (G_{sup} =1.05 and (G_{inf} = 0.95 respectively. The other partial factors on actions (especially on variable actions) are as in (1).

A.2.3 P factors for crane loads

P factors for crane loads are as given in Table A.2.

Table A.2 P factors for crane loads

Action	Symbol	P_0	P_1	P_2
Single crane or groups of loads induced by cranes	Q_r	1.0	0.9	– [1)]
[1)] Ratio between the permanent crane action and the total crane action				

A.3 Serviceability limit states

A.3.1Combinations of actions

(1) For verification of serviceability limit states the various combinations should be taken from EBCS EN 1990:2014.

(2) When tests are performed, the test loading of the crane, see 2.10, should be considered as the crane action.

A.3.2 Partial factors

(1) In serviceability limit states the partial factor on actions on crane supporting structures should be taken as 1.0 unless otherwise specified.

A.3.3 P factor for crane actions

(1) Values of P factors are given in Table A.2.

A.4 Fatigue

(1) The verification rules for fatigue depend on the fatigue load model to be used and are specified in the design EBCS.

ONLY FOR REVIEW PURPOSE

ANNEX B
(INFORMATIVE)
GUIDANCE FOR CRANE CLASSIFICATION FOR FATIGUE

Table B.1: Recommendations for loading classes

Item	Type of crane	Hoisting class	S-classes
1	Hand-operated cranes	HC 1	S_0, S_1
2	Assembly cranes	HC1, HC2	S0, S1
3	Powerhouse cranes	HC1	S_1, S_2
4	Storage cranes -with intermittent operation	HC2	S_4
5	Storage cranes, spreader bar cranes, scrap yard cranes -with continuous operation	HC3, HC4	S_6 ,S_7
6	Workshop cranes	HC2, HC3	S_3,S_4
7	Overhead travelling cranes, ram cranes -with grab or magnet operation	HC3, HC4	S_6, S_7
8	Casting cranes	HC2, HC3	S_6, S_7
9	Soaking pit cranes	HC3, HC4	S_7, S_8
10	Stripper cranes, charging cranes	HC4	S_8, S_9
11	Forging cranes	HC4	S_6, S_7
12	Transporter bridges, semi-portal cranes, portal cranes with trolley or slewing crane -with hook operation	HC2	S_4, S_5
13	Transporter bridges, semi-portal cranes, portal cranes with trolley or slewing crane -with grab or magnet operation	HC3, HC4	S_6, S_7
14	Travelling belt bridge with fixed or sliding belt(s)	HC1	S_3, S_4
15	Dockyard cranes, slipway cranes, fitting-out cranes -with hook operation	HC2	S_3, S_4
16	Wharf cranes, slewing, floating cranes, level luffing slewing - with hook operation	HC2	S_4, S_5
17	Wharf cranes, slewing, floating cranes, level luffing slewing - with grab or magnet operation	HC3, HC4	S_6, S_7
18	Heavy duty floating cranes, gantry cranes	HC1	S_1, S_2
19	Shipboard cargo cranes -with hook operation	HC2	S_3, S_4
20	Shipboard cargo cranes -with grab or magnet operation	HC3, HC4	S_4, S_5
21	Tower slewing cranes for the construction industry	HC1	S_2, S_3
22	Erection cranes, derrick cranes -with hook operation	HC1, HC2	S_1, S_2

ONLY FOR REVIEW PURPOSE

23	Rail mounted slewing cranes -with hook operation	HC2	S_3, S_4
24	Rail mounted slewing cranes - with grab or magnet operation	HC3, HC4	S_4, S_5
25	Railway cranes authorised on trains	HC2	S_4
26	Truck cranes, mobile cranes -with hook operation	HC2	S_3, S_4
27	Truck cranes, mobile cranes -with grab or magnet operation	HC3, HC4	S_4, S_5
28	Heavy duty truck cranes, heavy duty mobile cranes	HC1	S_1, S_2

ONLY FOR REVIEW PURPOSE