

ADDIS ABABA
SCIENCE AND
TECHNOLOGY
UNIVERSITY
UNIVERSITY FOR INDUSTRY

Construction Materials

CENG 2092

Abenezer T.

January 2023

Chapter Six
Bituminous Materials (Asphalt Cement)



Definition

Bituminous materials is a class of black or dark colored solid or viscous cementitious substances composed chiefly of hydrocarbons.

When mixed with aggregates in their fluid state they solidify and bind the aggregates together, forming a pavement surface.

Uses of Bituminous Materials

Bituminous materials are used:

- Extensively for road construction, because of their excellent binding or cementing power and their water proofing properties

- Used in roofing materials and as protective / water proof coating.

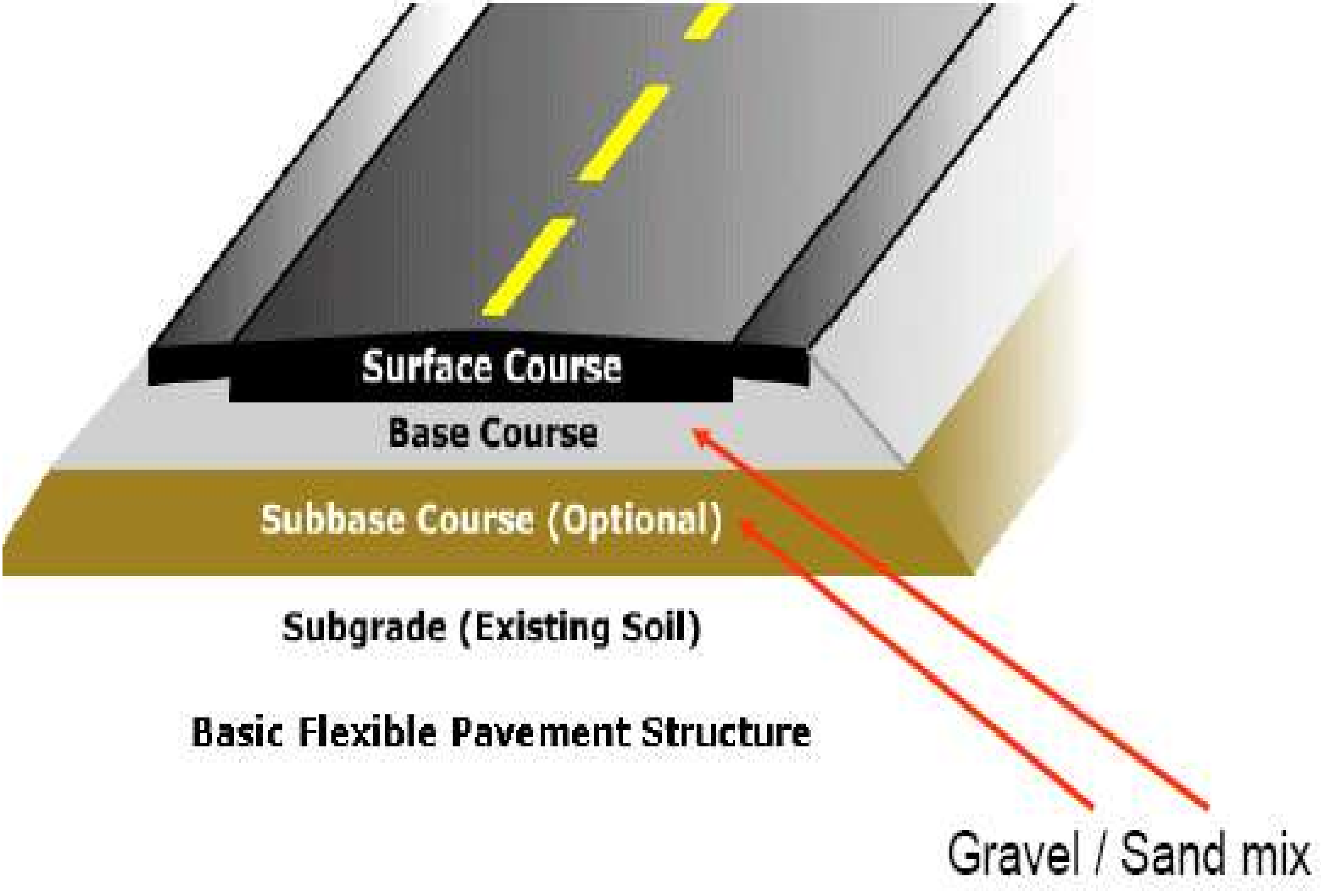

Basic Flexible Pavement Structure

Functions of asphalt pavement

- Distribute the load from the tires
  (24 - 100+ psi inflation pressures)
- Protect the sub grade from the weathering elements

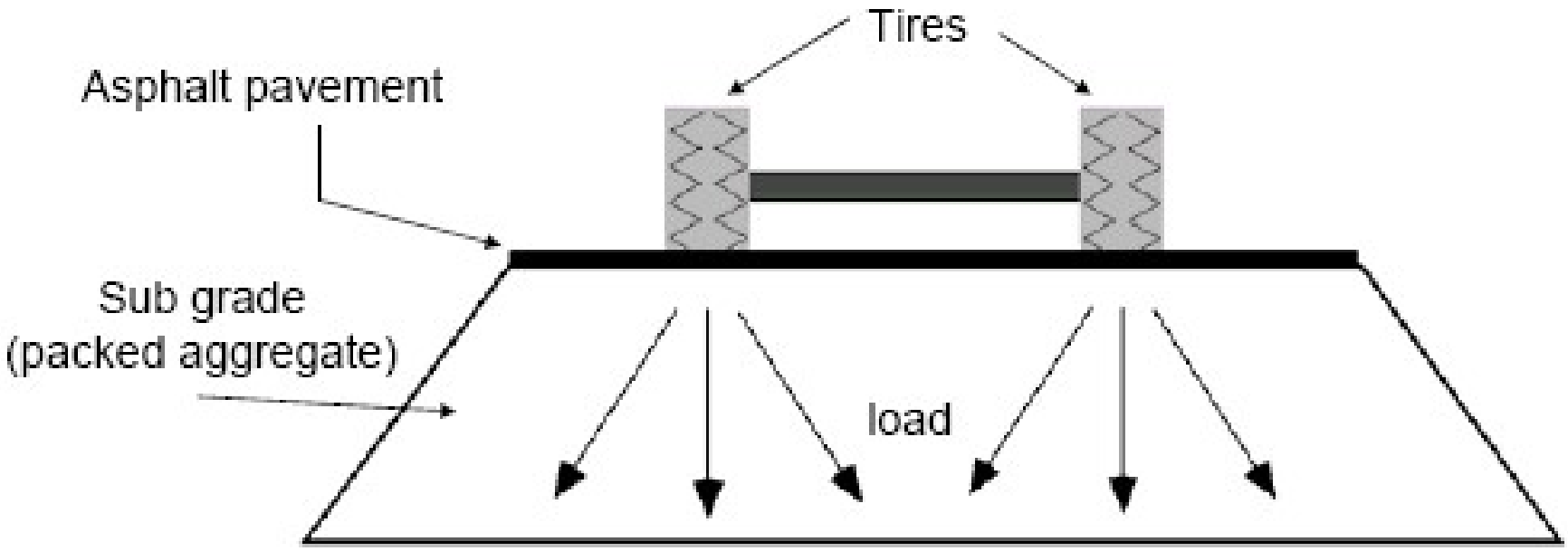

Classification of Bituminous Materials

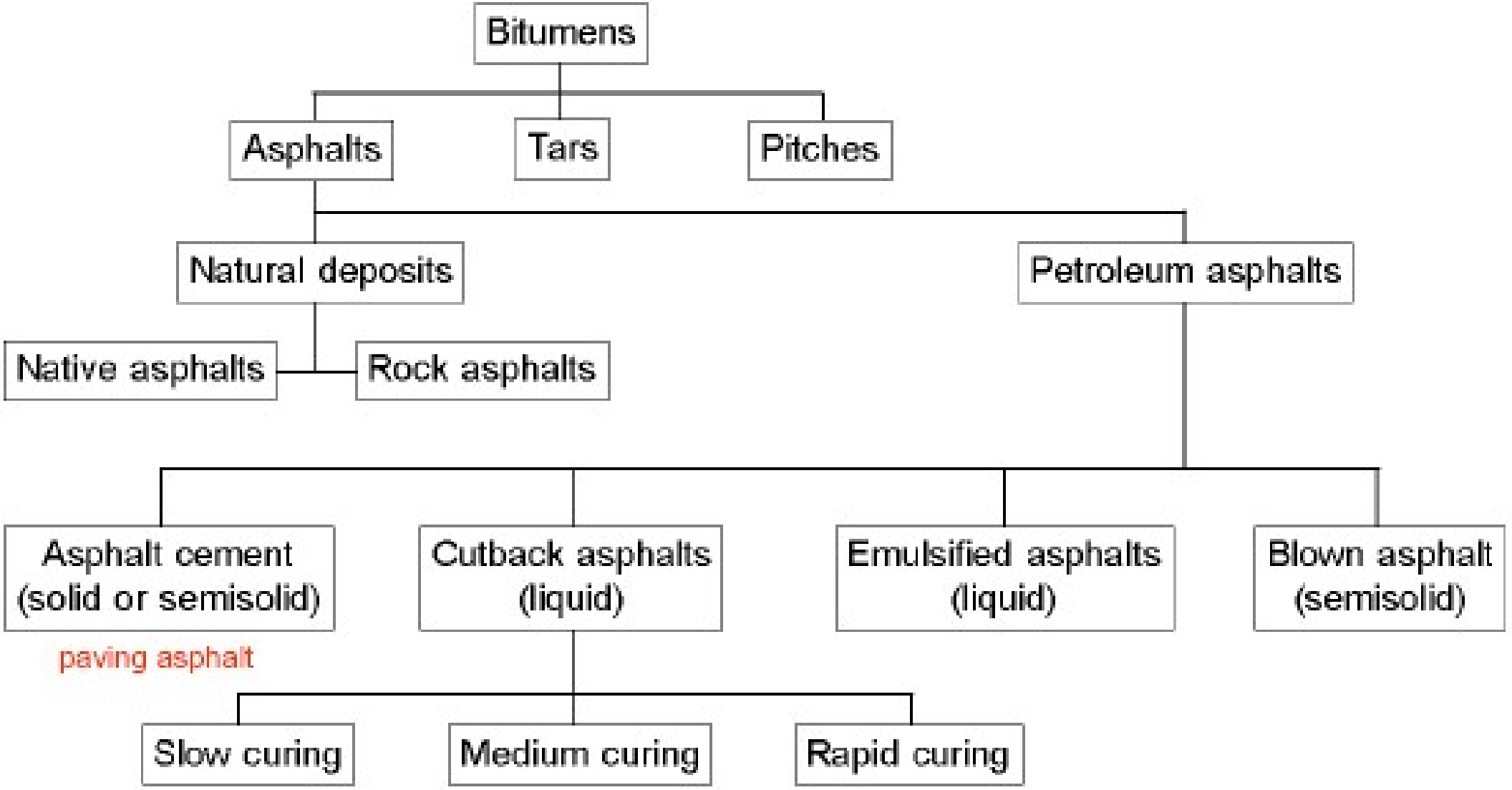

Classification of Bituminous Materials

1. **Native asphalts**: Obtained from asphalt lakes these were used in some of the earliest pavements.

2. **Rock asphalts:** These are rock deposits containing bituminous materials which have been used for road surfaces in localities where they occur.

3. **Tars:** Tars are bituminous materials obtained from the distillation of coal.

4. **Petroleum asphalts:** These are products of the distillation of crude oil. These asphalts are by far the most common bituminous paving materials in use today.

Native Asphalt

Asphalt lake



Petroleum asphalt

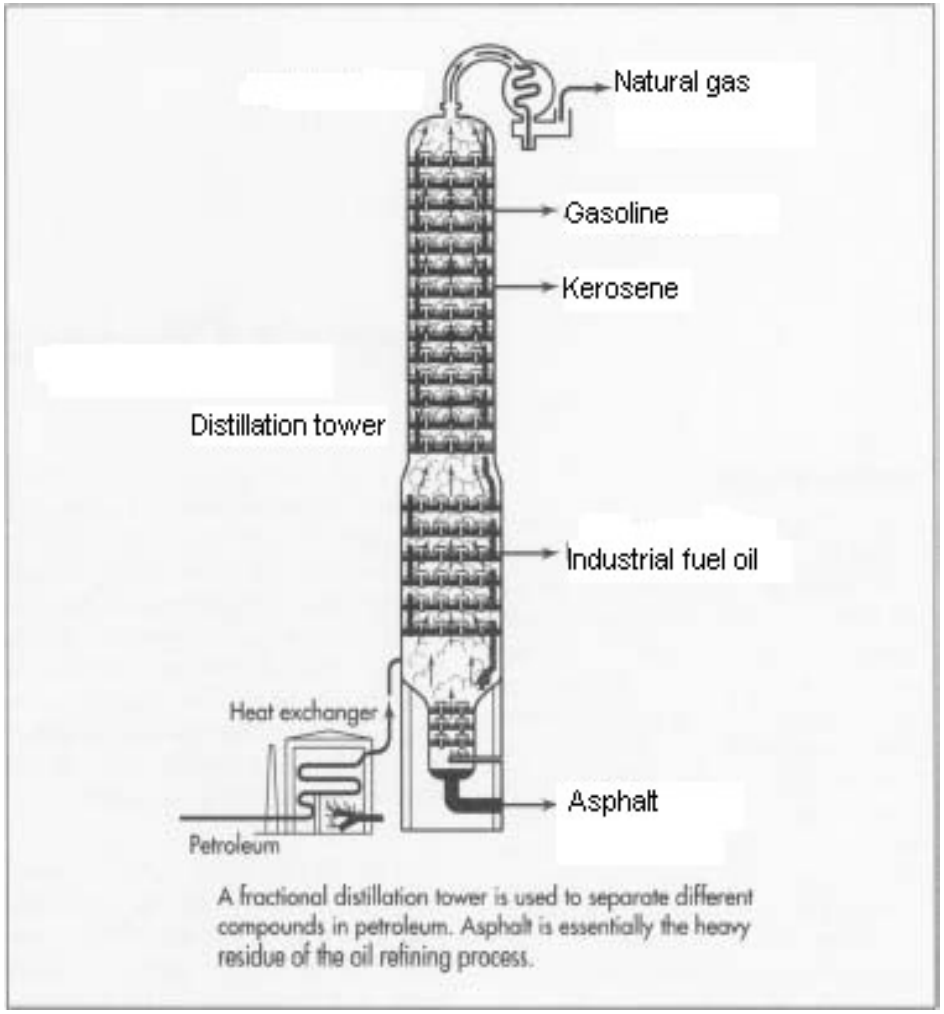

A fractional distillation tower is used to separate different compounds in petroleum. Asphalt is essentially the heavy residue of the oil refining process.



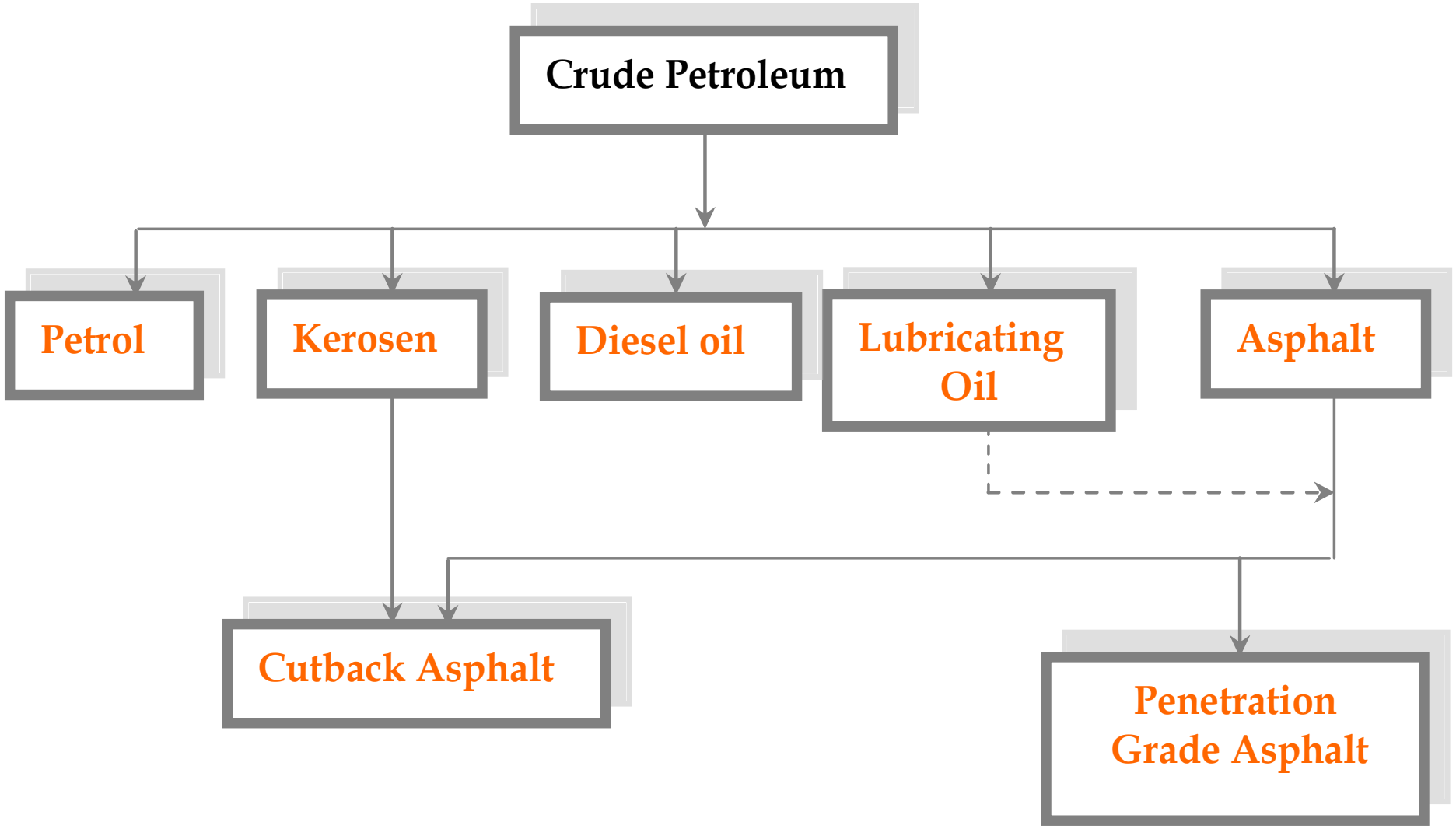
Crude Petroleum
Petrol
Kerosen
Diesel oil
Lubricating Oil
Asphalt
Cutback Asphalt
Penetration Grade Asphalt

The major types of petroleum asphalt are:

1.Penetration Grade Asphalt (Asphalt cements)

2. Oxidized asphalts (Air Blown asphalt)

3. Cut back asphalt (Liquid asphalts)

4. Emulsions (Emulsified Asphalt)

1.Penetration Grade Asphalt (Asphalt cement)

Asphalt cements (AC) are the primary asphalt products produced by the distillation of crude oil.

The term derives from the test which is used to characterize them according to hardness.

Grading of Asphalt Cement

Asphalt cements were originally graded according to penetration value. This is an empirical test in which the amount the needle penetrates at 25°c of prepared asphalt sample in five seconds is measured in tenths of a millimeter under standard conditions.

Penetration Test

Penetration Testing

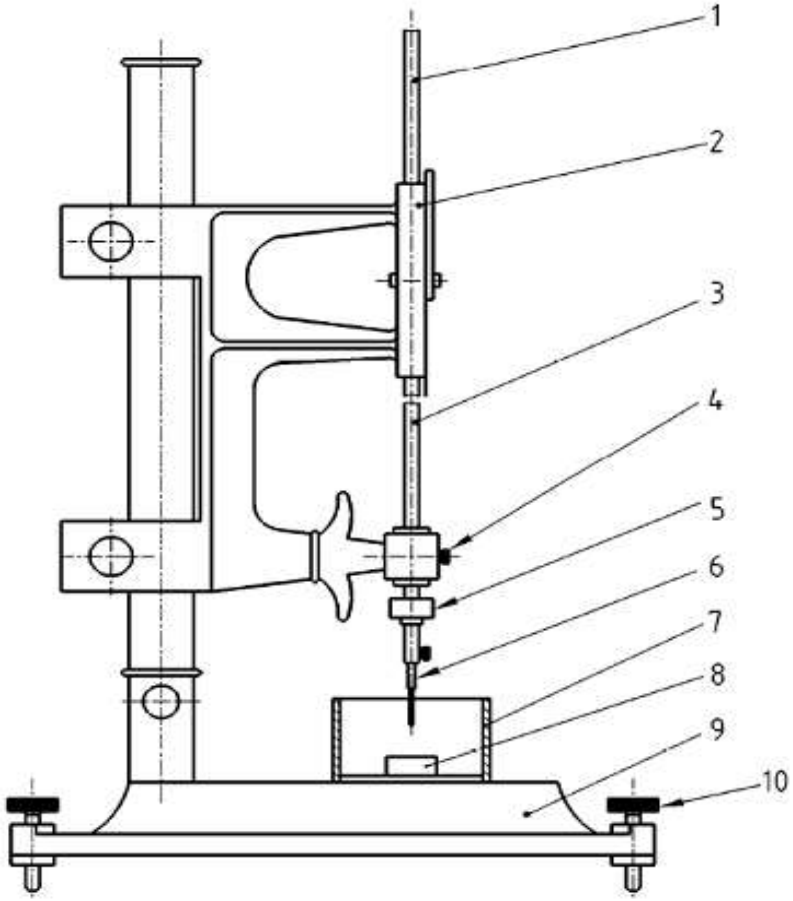

Key

1. Spindle
2. Dial assembly
3. Needle holder
4. Release assembly
5. 50 g mass
6. Needle and ferule
7. Transfer dish with flat bottom
8. Test sample container
9. Base plate (stand)
10. Level adjustment screw

Penetration Test

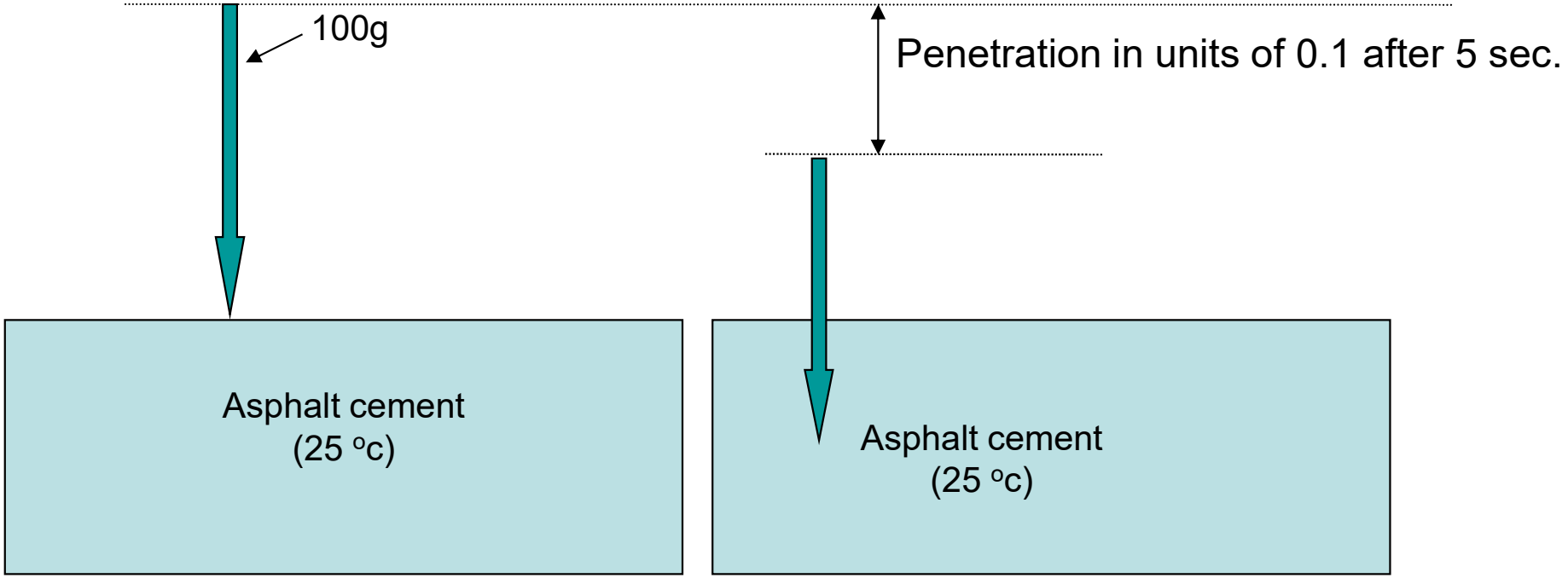

For example, if the needle penetrated 9.8 mm-or 98 tenths of a mm-the penetration value would be 98.

Viscosity

- ✓ **Viscosity** is the resistance of a material to flow.
- ✓ The viscosity of asphalt varies greatly with temperature, ranging from a solid to a fairly thin liquid.
- ✓ Viscosity-temperature relationships are extremely important in the design and use of asphalt materials.
- ✓ Grades of asphalt and temperature at which they are used depend to a great extent on their viscosity.

Viscosity

Types of Viscosity Tubes

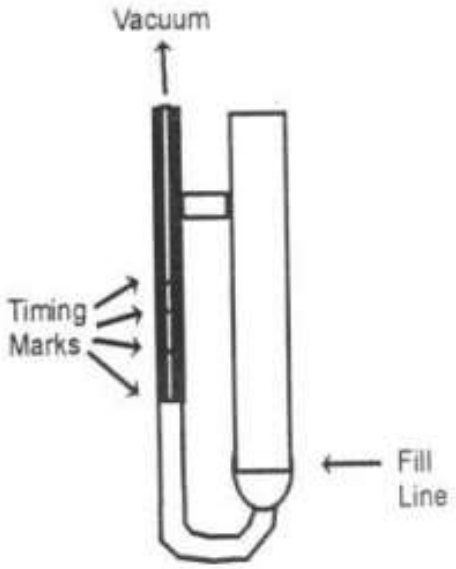

Asphalt Institute Tube

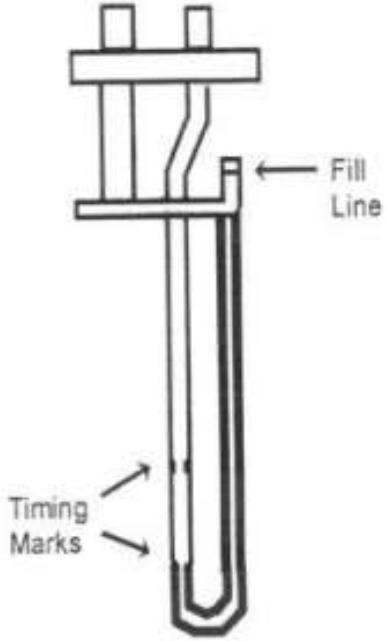

Zietfuchs Cross-Arm Tube



Viscosity grades

The viscosity grades indicate the viscosity in hundreds of poises ± 20% measured at 60°C.

Absolute viscosity is measured in Pa.s (SI units) and poises (traditional units). [1 poise = 0.1 Pa. s]

For example:

AC 2.5 has a viscosity of 250 poises ± 50.

AC 40 has a viscosity of 4000 poises ± 800.

Viscosity grades

REQUIREMENTS FOR BITUMEN, VISCOSITY GRADED AT 140°F (60°C) ASTM D3381

Note: Grading based on original asphalt

	VISCOSITY GRADE				
	AC-2.5	AC-5	AC-10	AC-20	AC-40
Viscosity, 140°F (60°C), P	250 ± 50	50 ± 100	1000 ± 200	2000 ± 400	4000 ± 800
Viscosity, 275°F (135°C), min, cSt	80	110	150	210	300
Penetration, 77°F (25°C), 100g, 5s, min	200	120	70	40	20
Flash point, Cleveland open cup, min, °F (°C)	325 (163)	350 (177)	425 (219)	450 (232)	450 (232)
Solubility in trichloroethylene, min, %	99	99	99	99	99
Tests on residue from thin-film oven test:					
Viscosity, 140°F (60°C), max, P	1250	2500	5000	10,000	20,000
Ductility, 77°F (25°C), 5 cm/min, min, cm	100[A]	100	50	20	10

[A] *If ductility is less than 100, material will be accepted if ductility at 60°F (15.5°C) is 100 minimum at a pull rate of 5 cm/min*

2. Oxidized asphalts
(Air blown asphalt)

Refinery asphalt may be further processed by air blowing. This consists of introducing air under pressure into soft asphalt under controlled temperature conditions. The oxygen in the air reacts with certain compounds in the asphalt resulting in the formation of compounds of higher molecular weight.

Uses of Oxidized Asphalt

Although these asphalts are mostly used for industrial applications such as roofing and pipe coatings, there is a road asphalt produced by this process known as heavy duty asphalt.

3. Cutback asphalts (Liquid asphalts)

Cutback asphalts (Liquid asphalts) are asphalt cements mixed with a solvent to reduce their viscosity and, thus, make them easier to use at ordinary temperatures. They are commonly heated (if required) and then sprayed on aggregates. Upon evaporation of the solvent, they cure or harden and cement the aggregate particles together.

Grades of liquid asphalts are governed by viscosity.

Asphalt Cement

Solvent

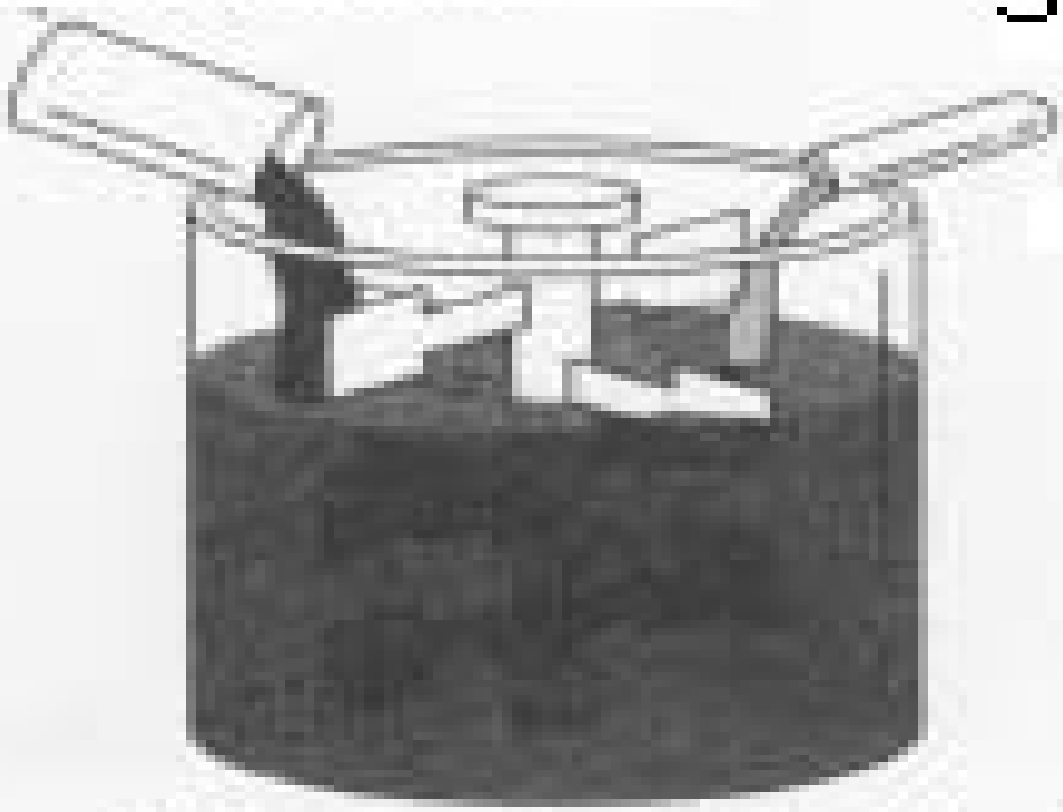

The asphalt is "cut back" by blending it with a volatile substance to make it softer and more workable. The volatile element evaporates when exposed to air.

Types and grades are based on the type of solvent, which governs viscosity and the rates of evaporation and curing.

1. **Rapid curing(RC)** types use gasoline as a solvent, and therefore cure rapidly.
2. **Medium Curing (MC)** types use kerosene.
3. **Slow Curing (SC)** types use diesel fuel, or they may be produced directly from the refinery during distillation.

Solvent contents are commonly from 15% to 40% of the total.

4. Asphalt emulsions

Asphalt emulsions are mixtures of asphalt cement and water. As these components do not mix themselves, an emulsifying agent must be added. The emulsifying unit breaks up the asphalt cement and disperses it, in the form of very fine droplets, in the water carrier. When used, the emulsion sets as the water evaporates. The emulsion usually contains 55%-75% asphalt cement and up to 3% emulsifying agent, with the balance being water.

Asphalt emulsions

- Emulsions are used because they effectively reduce asphalt viscosity for lower temperature uses.

Tests for asphalt

Quality control tests for asphalt materials include the following:

- **Viscosity** (ASTM D2171, ASTM D2170, ASTM D5)
- **Ductility** (ASTM D113)
- **Thin-film oven test** (ASTM D1754)
- **Solubility** (ASTM D2042)
- **Flashpoint** (ASTM D92)

Asphalt Concrete



Asphalt Concrete

The main asphalt paving material in use today is asphalt concrete.

- A high quality pavement surface is composed of asphalt cement, aggregate and air, hot mixed in an asphalt plant and then hot-laid.
- Relative amounts of aggregate, asphalt, and air are important

Asphalt Concrete

- Some of the asphalt cement seeps into voids in the aggregate particles, and therefore is not available to coat and bind aggregates together leaves more air voids in the mixture than would be expected by calculating the total aggregate and asphalt volumes
- Asphalt absorption of aggregate is less than water absorption for the same aggregate (by about 50%) but, important to include the absorbed asphalt in the calculation, since all volumes must be measured accurately

Aggregates for Asphalt Concrete

- Usually classified as ***coarse aggregates***, ***fine aggregates***, ***or mineral filler***
- Mineral filler is often used in asphalt concrete mixtures to supply the fines (< 75μm)
- Fines are very important in producing a dense-grained, strong material
- Limestone dust is the most common material used as mineral filler

Aggregates for Asphalt Concrete

In general, aggregates to be used in asphalt concrete should be:

a. **Well-graded** $\Rightarrow$ dense, including mineral filler for strength

b. **Hard** $\Rightarrow$ for resistance to wear and to polishing due to traffic

c. **Sound** $\Rightarrow$ For resistance to breakdown due to freezing and thawing

Aggregates for Asphalt Concrete

d. **Rough surfaced** $\Rightarrow$ crushed rough surfaces give higher friction strength and a better surface for adhesion of the asphalt cement

e. **Cubical** $\Rightarrow$ thin, elongated aggregate particles break easily

g. **Free from deleterious materials** $\Rightarrow$ clay particles, dust, dirt, and lightweight pieces may lead to a lower quality asphalt film on the aggregate particles or may result in breaking of some of the particles

Requirements of asphalt concrete

- Asphalt concrete surfaces must provide smooth, skid-resistant riding surfaces
- Must be strong enough to carry the imposed loads
- Maintain its properties for the expected design life
- Requirements leading to the intended properties are:
    i. Strength
    ii. Flexibility
    iii. Durability
    iv. Skid resistance

1. Strength

-Must be sufficient to carry the load without shear occurring between particles

-Structure must remain intact (friction between grains must be high)

-Dense-graded mixture is best for high friction strength with a relatively low amount of binder

-If the asphalt coating around the particle is too thick, the amount of friction between particles is reduced

2. Flexibility

- Asphalt concrete must be able to deflect slightly under each load without cracking or permanent deformation

3. Durability

Measures the pavement's resistance to wear and aging

- Aggregates should be hard and cubical to ensure minimum breakdown during manufacture and during application of loads
- Aggregates should be sound, not susceptible to disintegration from repeated freezing and thawing action
- As some aggregates have higher affinity to water than asphalt cement, water may replace the asphalt film on the aggregate particles, destroying the bond between asphalt and aggregate particles

4. Skid resistance

- Loss of skid resistance of asphalt concrete surface is mainly caused by ***polishing*** of the aggregate or ***bleeding*** of the asphalt cement
- Surface courses usually have lower maximum particle size in order to increase projection surface area so as to increase skid resistance
- Aggregate should be hard and resistant to wear, and thus resistant to polishing
- Limestone aggregates tend to polish in many cases

4. Skid resistance

- Bleeding occurs on hot days, when the asphalt cement tends to seep to the surface in mixtures with few voids
- Specifications usually require minimum air void content so that the asphalt cement can be accommodated in the air void space as pavement becomes denser under load.

THANK YOU!!!