Chapter Nine
Hydraulic Turbines



Introduction

- ***Hydraulic machine:*** is a device that converts the *hydraulic energy* to *mechanical energy* or vice versa using water as a working fluid. It can be *turbine* or *pump*
- ***Pump***: Hydraulic machine that converts mechanical energy (rotation of shaft or rotor) to hydraulic energy (develop head). It is *work absorbing type of HM*.
- ***Turbine:*** Hydraulic machine that converts hydraulic energy to mechanical energy. The water imparts energy for the rotor and it is power delivering type of Hydraulic machine or Power machine. Turbines can be steam, gas or ***hydraulic*** turbine

- ***Hydraulic turbine*** **is the main element of *hydropower plant.***
- **Hydro power is among the oldest renewable energy sources to be utilized. Water wheel is an example of an ancient way of exploiting hydro energy from rivers.**
- **Hydropower plant is one of the most cost effective and reliable energy technologies to be considered for providing clean electricity generation.**

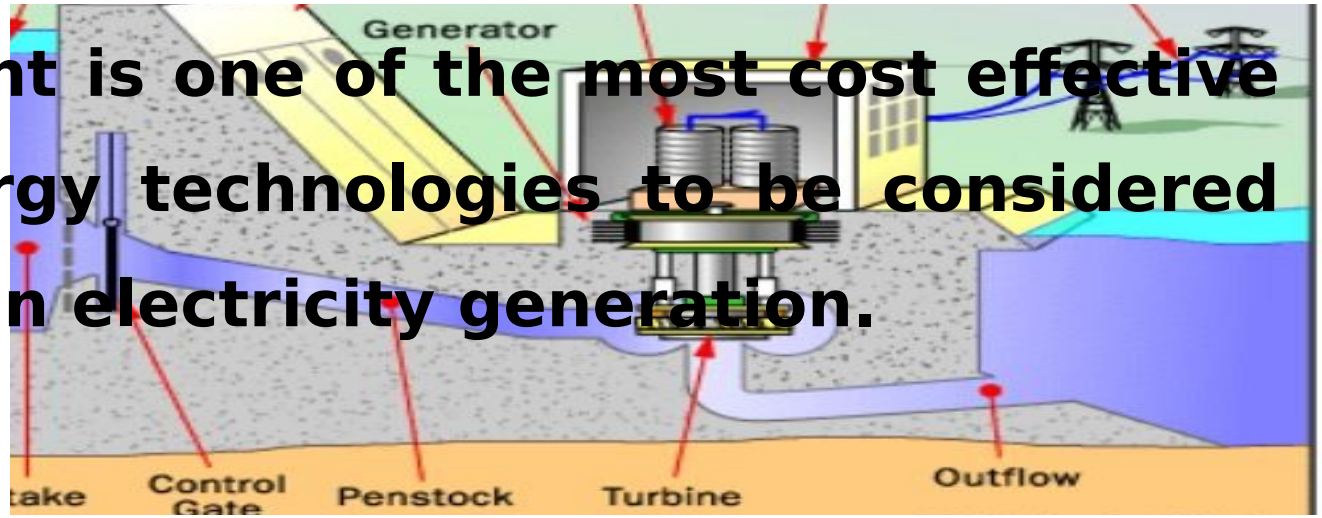

Features of hydropower plants

Advantages

- ✓Relatively simple technology
- ✓High efficiency(70-90%)
- ✓High level of predictability
- ✓Long use full life
- ✓Eco friendly (no air pollution)
- ✓High capacity factor(>50%)
- ✓Lower operation and maintenance cost
- ✓High reliability
- ✓Fishing in reservoirs

Disadvantages

- ✓High capital (initial) cost
- ✓Limited number of favorable site
- ✓Ecological degradation of downstream areas (loss of arable land and displacement of population)
- ✓Sedimentation in upstream and erosion in downstream.

Components and working principles of a hydropower plant

Working principle

- The working principle of a hydropower plant is simple. Water energy stored in a form of gravitational potential energy (elevation) is converted in to the kinetic energy (velocity) and the fluid pressure, while giving up its elevation down to the turbine blades.
- Water possessing enormous velocity and pressure passes through the turbine blades where efficient energy transfer from the water to the turbine blades, takes place.
- The turbine is either directly coupled with the generator or gear box may be provided to synchronize with the generator speed. The generator rotation produces electricity which is the worlds most suitable form of energy.
- Electricity can be virtually transported to any place through any distance with minimum loss possible. Alternating current is one of the most important discoveries which create the modern world.
- The power extracted is proportional to head and discharge and the theoretical power is given by:

$P = \rho g Q H$, where ρ is density of water, g is gravitational acceleration, Q is the volume flow rate and H is the net head.

Components and Working Principles Hydropower plant

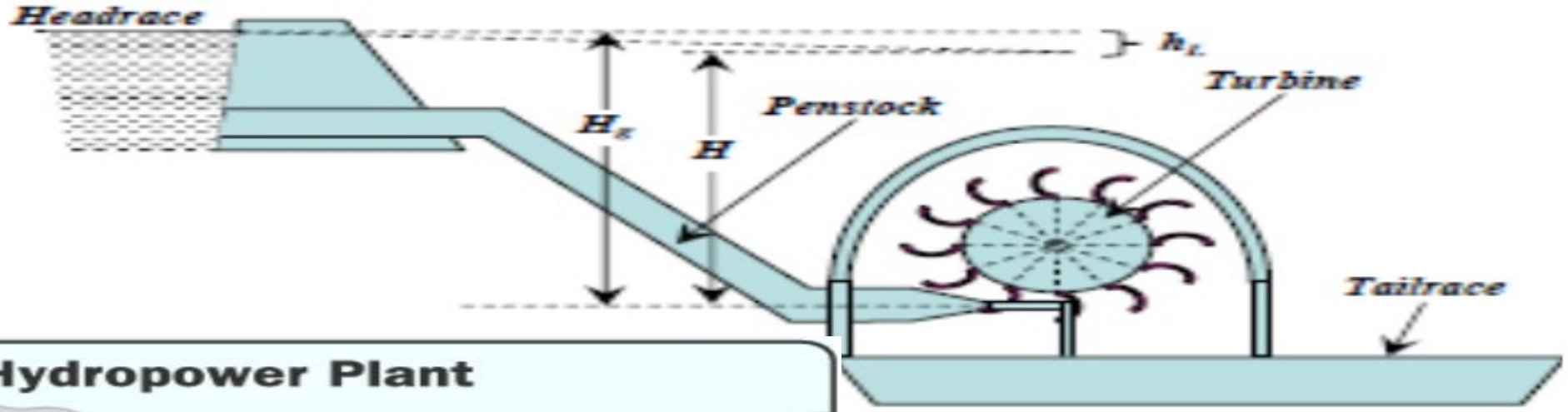

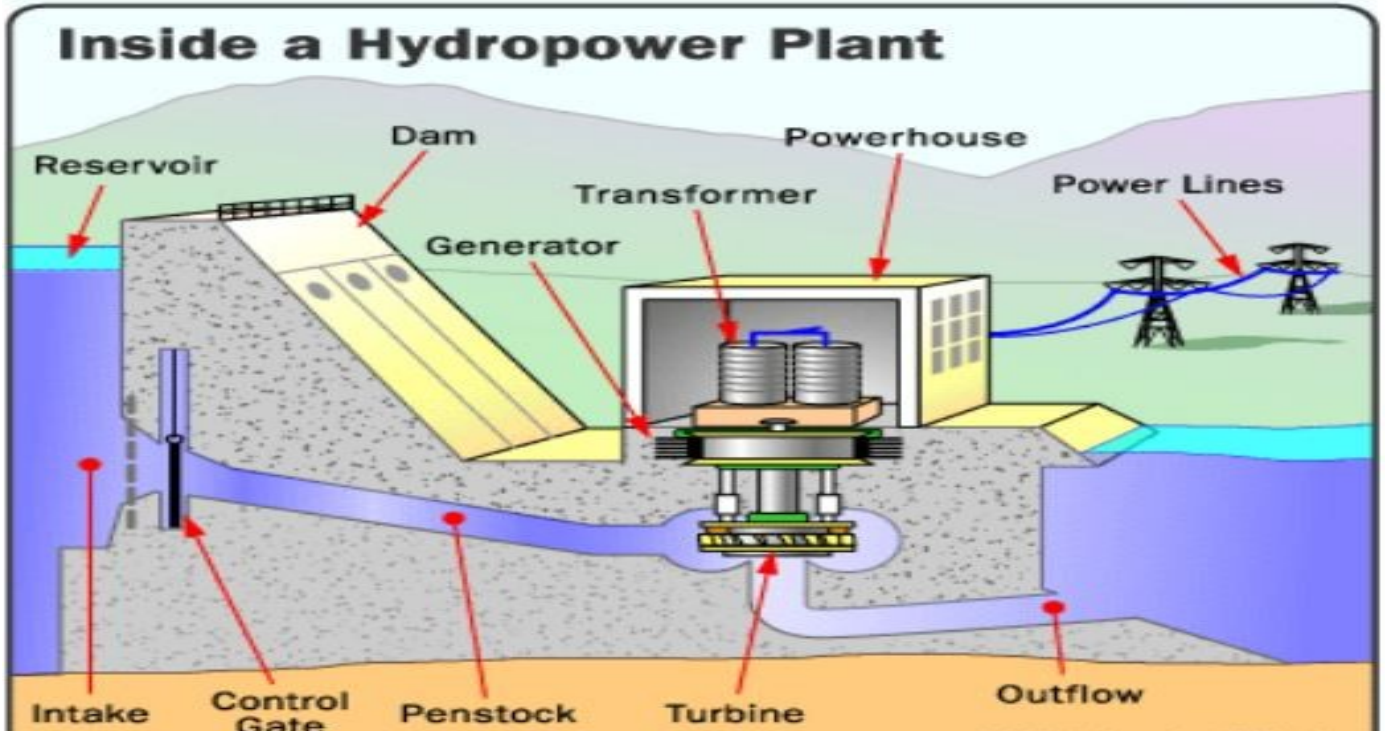

Components of hydro power plant

➢Dam

The dam is the most important component of hydroelectric power plant. The dam is built on a large river that has abundant quantity of water throughout the year. It should be built at a location where the height of the river is sufficient to get the maximum possible potential energy from water.

➢Reservoir

It is the place where the water rests before the dam. It has a higher elevation above the dam structure.

➢Intake or Control gates

These are the gates built on the inside of the dam. The water from reservoir is released and controlled through these gates. These are called inlet gates because water enters the power generation unit through these gates. Flow can be controlled by partially closing the inlet gates.

Cont…

- **Penstock**

Penstock is pipe or channel that leads the water from the *intake gate* to the turbine. Losses through penstock should be minimized to get maximum energy from the water.

- **Turbine**

Water flowing from the penstock is allowed to enter the power generation unit, which houses the turbine and the generator. When water falls on the blades of the turbine the *kinetic and potential energy of water* is converted into the *rotational* motion of the blades of the turbine. The rotating blades causes the shaft of the turbine to also rotate. The turbine shaft is enclosed inside the generator. In most hydroelectric power plants there is more than one power generation unit.

Cont…

- **Generator**

- It is in the generator where the electricity is produced.
- The shaft of the water turbine rotates in the generator, which produces alternating current in the coils of the generator.
- It is the rotation of the shaft inside the generator that produces magnetic field which is converted into electricity by electromagnetic field induction.
- Hence the rotation of the shaft of the turbine is crucial for the production of electricity and this is achieved by the ***kinetic and potential energy of water.***
- Thus in hydroelectricity power plants potential energy of water is converted into electricity

Cont…

- **Transformer**

The transformer inside the ***powerhouse*** takes the AC and converts it to higher-voltage current

- **Power lines**

Out of every power plant come four wires: the three phases of power being produced simultaneously plus a neutral or ground common to all three

- **Tail race**

Used water is carried through pipelines, called **tailraces**, and re-enters the river downstream.

Classification of Hydraulic Turbines

1. Based on way of energy transfer

- *Impulse*: Energy available at turbine inlet is KE, and Pressure = P_{atm}

Examples: Pelton, Turgo, Cross flow, ...

- *Reaction*: Energy in the form of both KE and PE at turbine inlet

Examples: Francis, Kaplan, Propeller, Bulb, ...

2. Based on flow direction through the runner
   - Tangential flow: (water flow along tangent of runner) pelton
   - Axial flow : Kaplan, Propeller, Bulb
   - Radial flow: this can be inward or outward flow radial turbine, Francis turbine
   - Mixed flow : water in radially and leaves axially, Francis

Types of turbines cont....

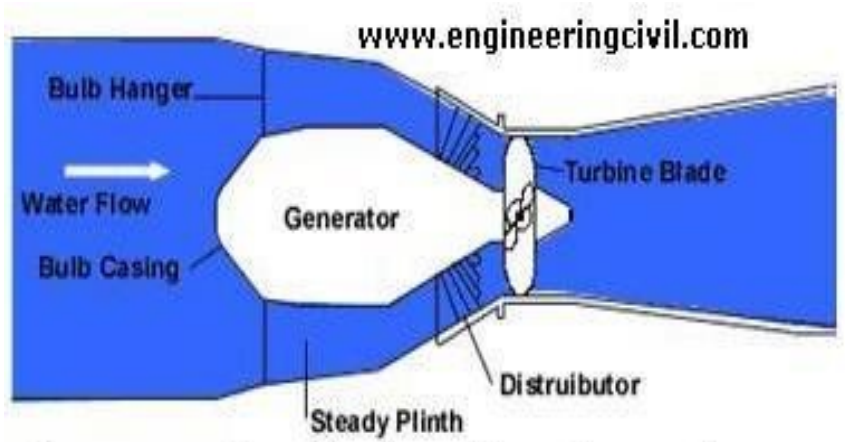

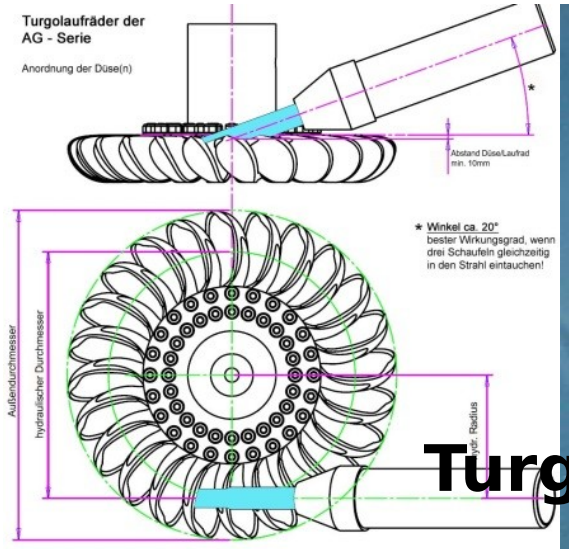



Turgo turbine



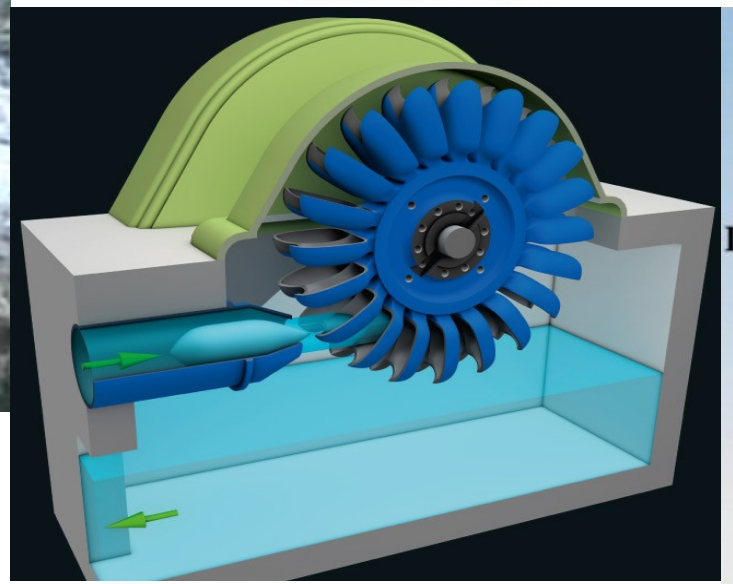

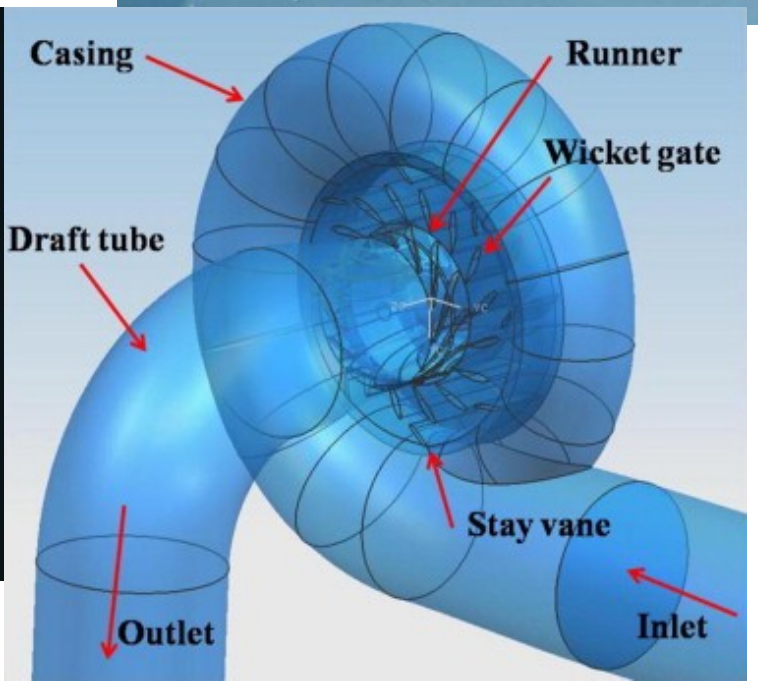

Cont....

3. Based on head at the inlet of turbine
   - High head (350-1800m): example, Pelton
   - Medium head (50-250m): example, Francis
   - Low head (less than 50): example, Kaplan and propeller
4. According to the specific speed of the turbine

- It is defined as the speed of geometrically similar turbine which would produce one unit of power while working under unit head.

$$N_s = \frac{N\sqrt{P}}{H^{\frac{5}{4}}}$$

-low specific speed turbine (<50) example, Pelton wheel

-medium specific speed (50<Ns<250) Example, Francis

-High specific speed (>250) Example, Kaplan and propeller

Cont..

Turbine		Type of energy	Head	Discharge	Direction of flow	Specific Speed
Name	Type					
Pelton Wheel	Impulse	Kinetic	High Head > 250m to 1000m	Low	Tangential to runner	Low <35 Single jet 35 – 60 Multiple jet
Francis Turbine	Reaction Turbine	Kinetic + Pressure	Medium 60 m to 150 m	Medium	Radial flow	Medium 60 to 300
					Mixed Flow	
Kaplan Turbine			Low < 30 m	High	Axial Flow	High 300 to 1000

Table:- classification of turbine

Pictures of Turgo and Cross – flow turbines

A Turgo Wheel is a variation on the Pelton. The Turgo runner is a cast wheel whose shape resembles a fan blade that is closed on the outer edges. The water stream is applied on one side, goes across the blades and exits on the other side.

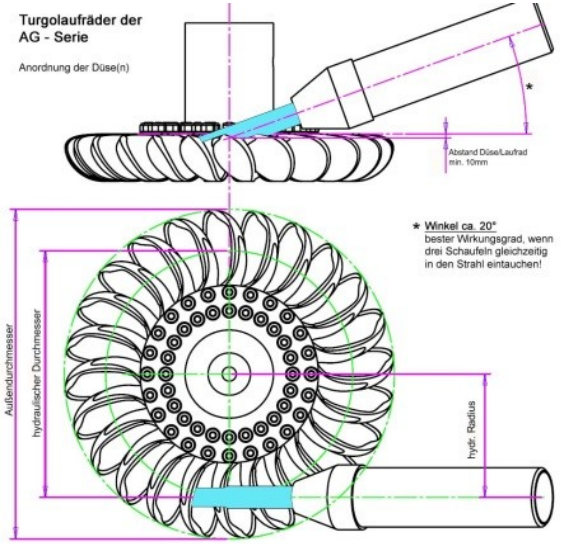



Cross – flow Turbine is a drum-shaped.
The water hits the turbine twice(in to out, then out to in) as shown in the red dotted line. Accommodate larger water flows and lower heads than the Pelton

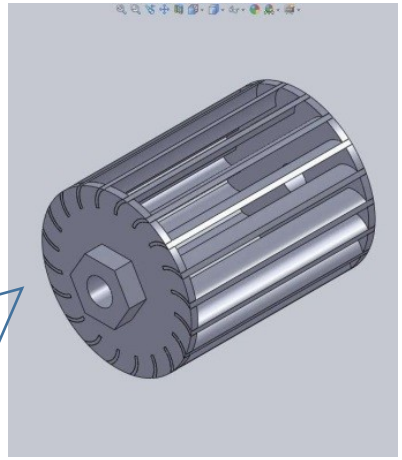

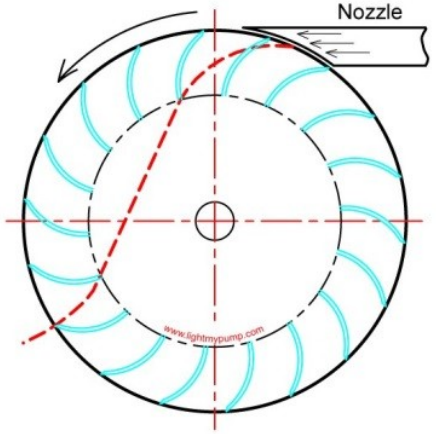



Hydropower plant schemes for different heads

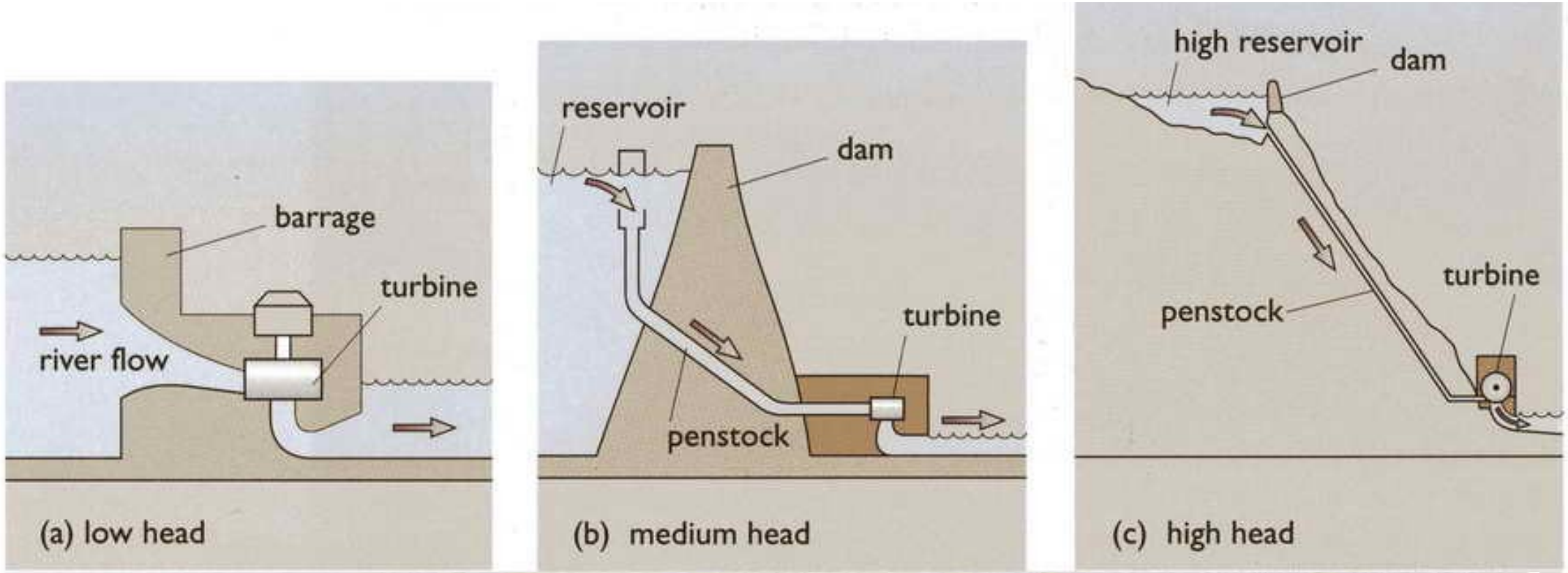

Types of hydroelectric installation

Pelton Wheel Turbine

- Invented around 1880 by Lester Pelton used for high head applications
- It is pure impulse turbine
- A jet of fluid leaving the nozzle strikes the buckets fixed to the periphery of a rotating wheel.
- Energy available @inlet of the turbine is only KE,
- The Pressure at inlet and exit of the turbine is atmospheric
- It is applicable in high head (150 to 2000 m) and low discharge flows.

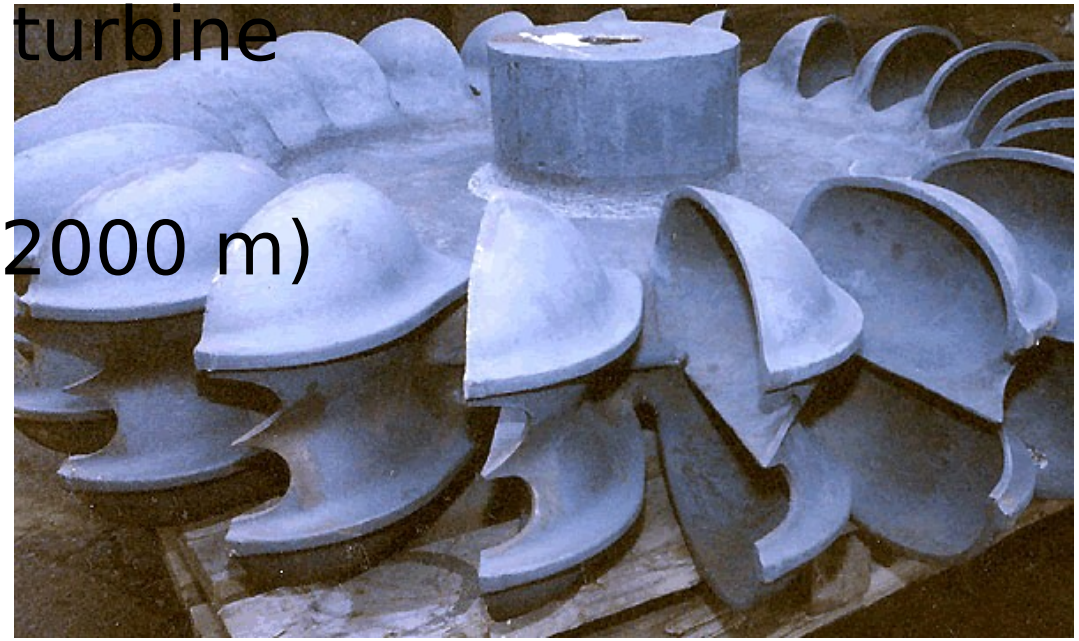

Components of Pelton wheel

- **Runner** : rotating wheel or circular disk in which on the periphery number of buckets evenly spaced and fixed.
- **Bucket**: double hemispherical cup or bowl.

Each bucket divided in to two symmetrical parts by splitter.

The jet of water strikes the splitter. The splitter then divides the **jet in to two equal parts** and the water comes out at the outer edge of the bucket

- It is circumferentially mounted on the periphery of the wheel.

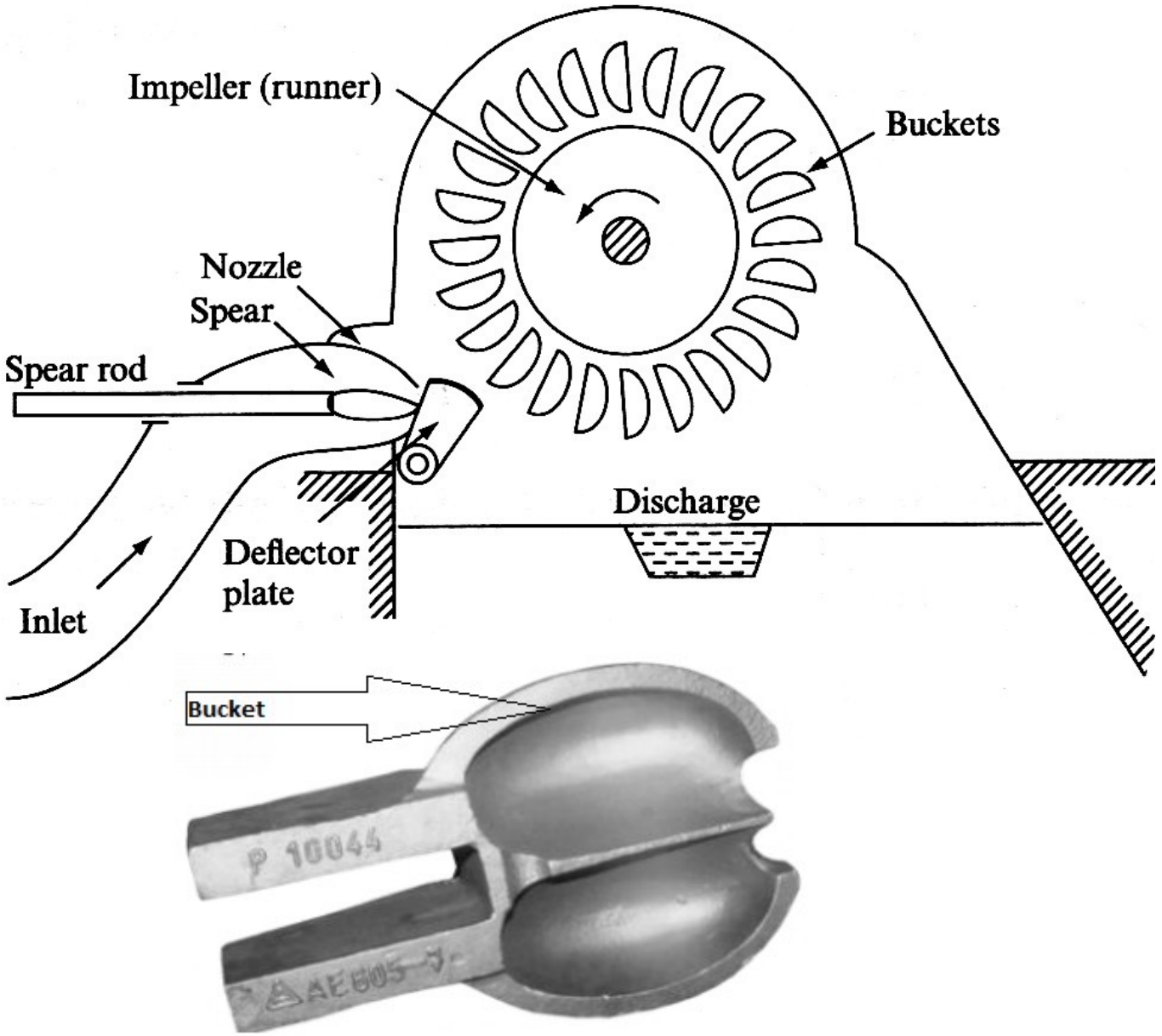

Cont...

- **Nozzle**: It is the component which creates a high velocity water jet, which will strike the buckets.
- **Spear rod**: It is a rod with a conical shaped head concentric in the nozzle which regulates the flow rate with a linear movement.
- **Deflector plate**: It is used to divert the jet away from the Pelton runner to stop the rotation of the turbine.
- **Brake nozzle**: Due to high inertia of the rotating Pelton runner, simply deflecting the jet will not quickly stop the turbine from rotating.

A water jet from the brake nozzle applies impulse opposite to the rotating direction which helps to quickly slows down the speed.

Cont..

- ***Housing***: It is useful for structural rigidity and directing the exit water away from the runner. But doesn't role in power generation.
- ***Distributor***: It is necessary in *multi jet Pelton* turbines to distribute the water to each nozzle with uniform velocity.
- ***Sh*** ar :s for power tra

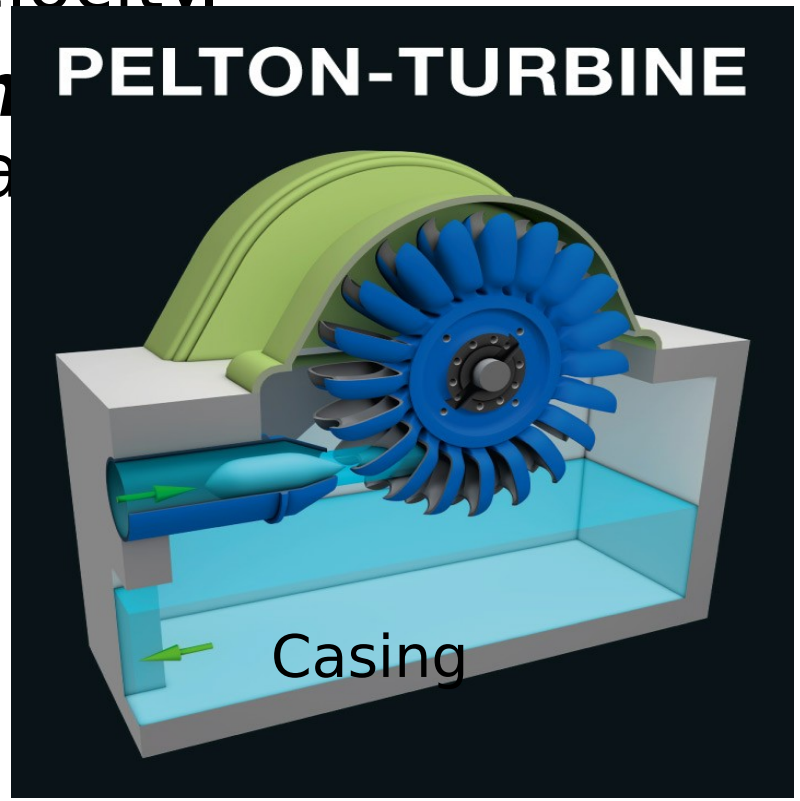

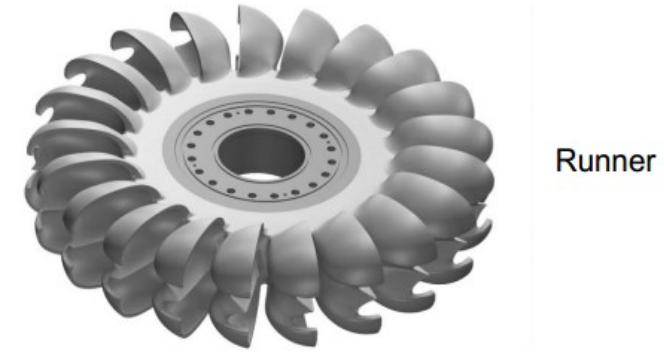

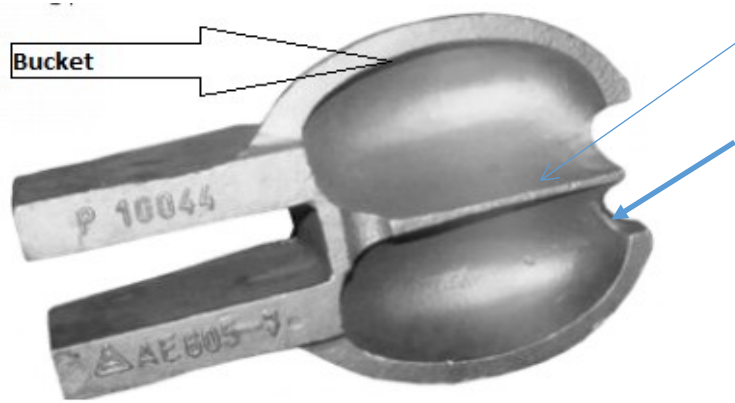

Multi jet Pelton wheel turbine

It increases the torque on the shaft but speed remains the same.

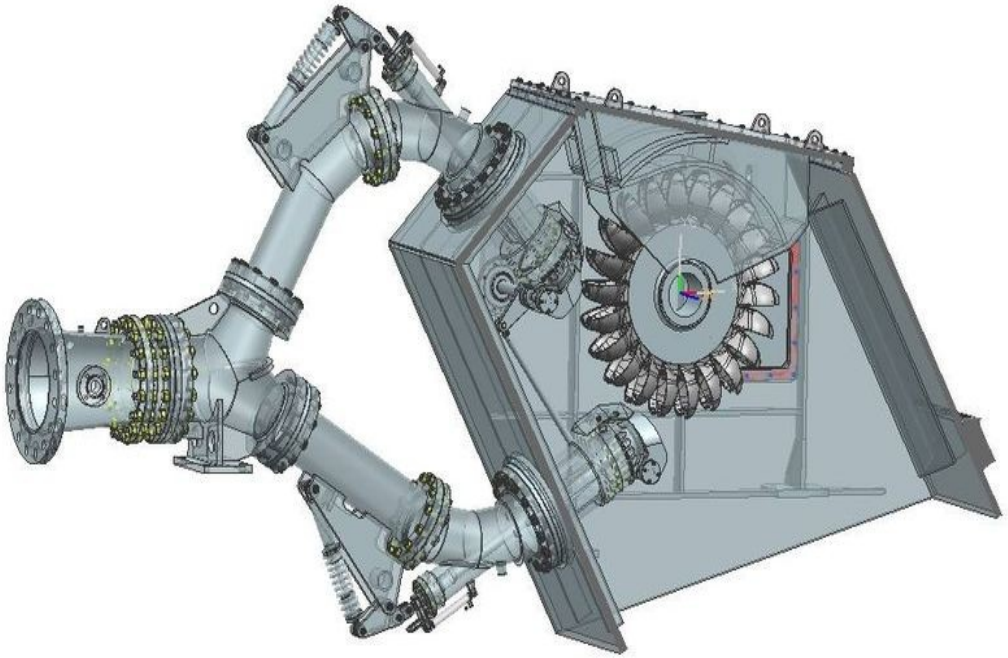

Horizontal shaft

Number of nozzles not more than two.

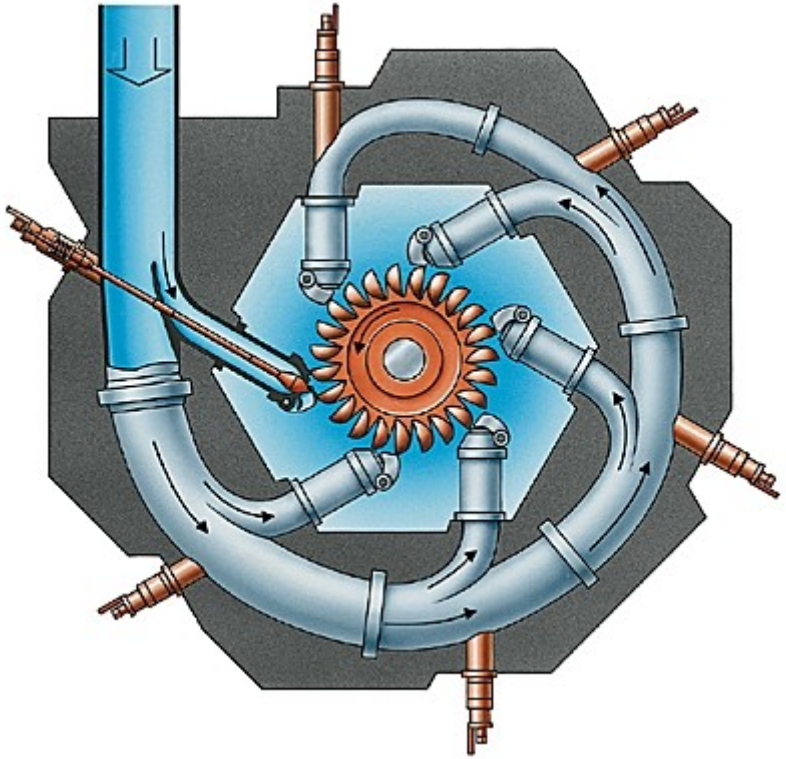

Vertical shaft

Up to six nozzles is applicable

Working principle and velocity triangle of Impulse turbine

Working principle of Pelton wheel

- Water supplied from a constant head reservoir. The nozzle at pen stoke end, converts total head at inlet to nozzle to water jet with velocity C_1.

- High speed water jets are ejected through the nozzle to strike the buckets at splitter. The bucket deflects the jet through an angle b/n 160-165 degree.

- Due to this deflection of jet, the momentum of the fluid changes (direction as well as speed) reacting on the bucket.

- The bucket is therefore pushed away by the jet, hence the wheel will rotate with the shaft.

Velocity triangle

Bucket surface

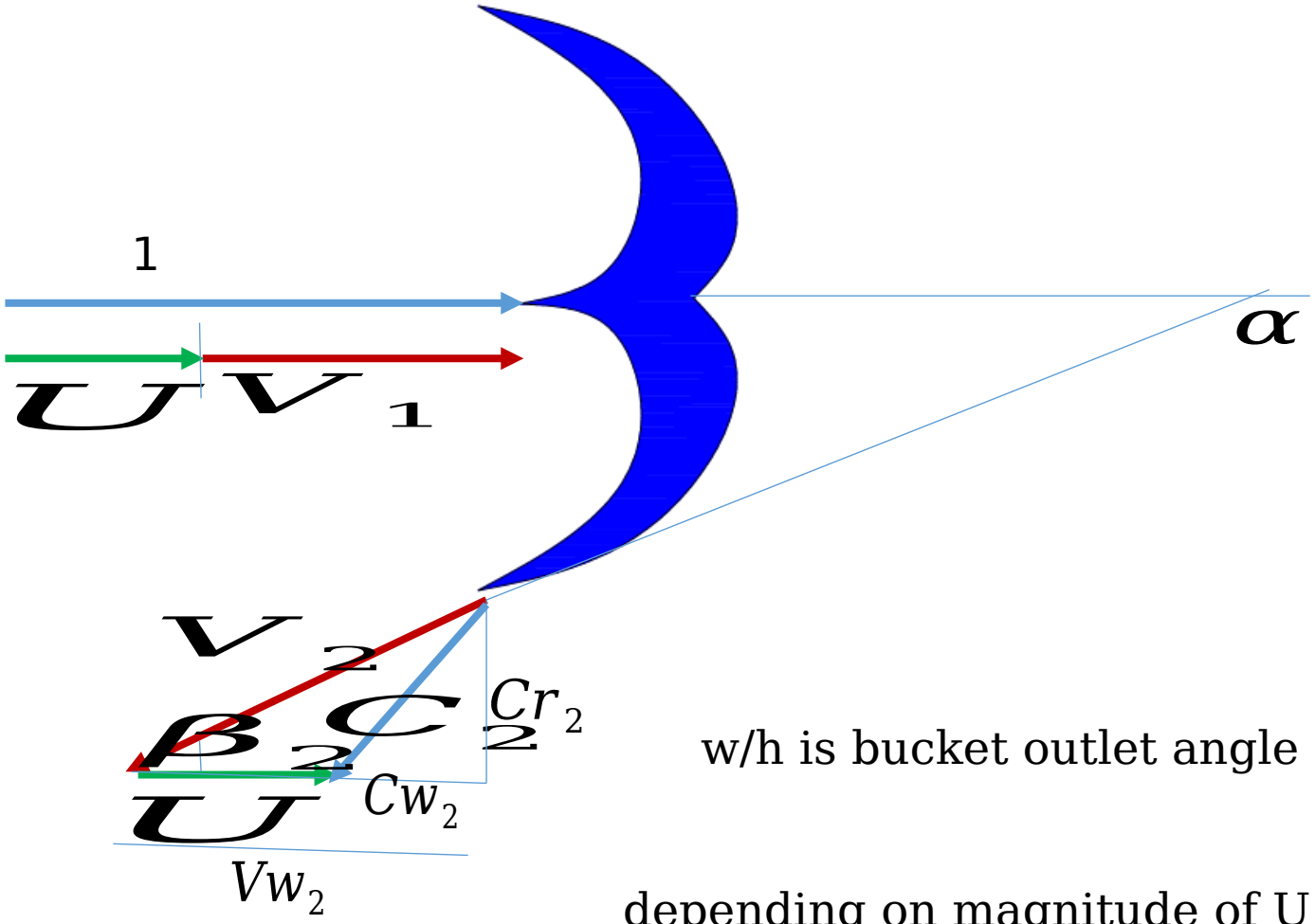

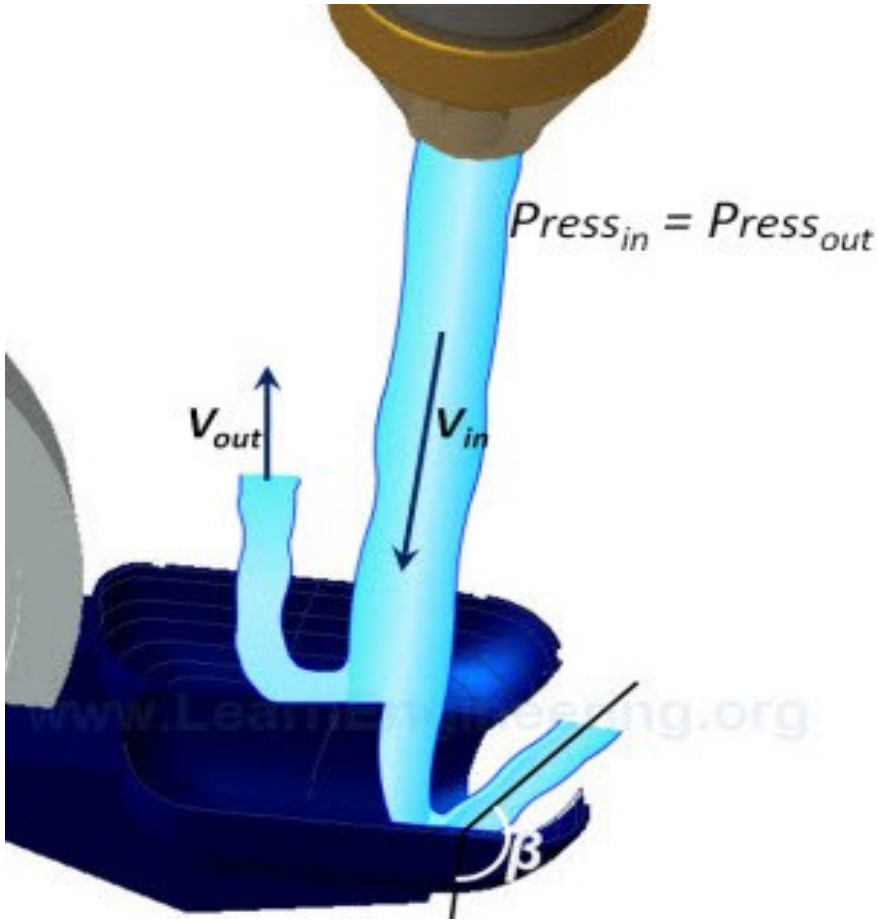

w/h is bucket outlet angle

depending on magnitude of U

Cont…

Specific work

but is in opposite direction

- From the velocity triangle ,

- Theoretically the relative velocity remains constant inside the bucket since it is an impulse turbine there is no static pressure change in the bucket.

(applies for all rotor)

- Since for impulse turbine, then .
- But in actual situation the relative velocity reduces due to friction.

A coefficient is introduce to account for it. .

Cont…

- Converting the specific work into head form

- As we see from the equation to get maximum work transfer needs to be 0.
- But this is not practical because such flow will directly face an incoming bucket and exerts a negative impulse opposite to the rotating direction.
- The practical range of value is between 10^0 to 20^0.
- Further manipulation can be done on the specific work done

Heads and efficiencies

- **Head**

The *net head* from the reservoir to the Pelton nozzle is the *available head*. It is the difference between the *gross static head* and the *losses* (friction, elbow, valve and cross – section change losses) in the penstock. Thus the available head

- gross head - friction head - elbow, valve,... losses

- **Efficiencies**

1. Hydraulic efficiency.
2. Nozzle efficiency
3. Mechanical efficiency.
4. Overall efficiency

Efficiency cont….

- **Hydraulic efficiency**

- Hydraulic Efficiency of the Pelton turbine can be defined as

- Differentiating the efficiency with respect to keeping other parameters constant, we get the optimum blade speed that gives the maximum efficiency.

, half of the jet velocity

efficiency cont….

- **Nozzle efficiency** is defined since the nozzle does not completely convert the incoming net head into the kinetic energy of the jet.

Nozzle velocity coefficient

Thus

efficiencies cont.....

- **Pipe line transmission efficiency**

, Hg is the gross head

- **Mechanical efficiency**

- **Overall efficiency**

=

Number of Buckets

- The most important consideration in Pelton turbine design is the number of blades/ buckets.
- As it is demonstrated in the figure, when the number of blades is less, only part of or none of the water jet will be intercepted by the bucket, which leads to a huge loss of the water jet kinetic energy.
- A cut out is provided at the [illegible] event obstruction of the jet by the incoming buck [illegible] the bucket

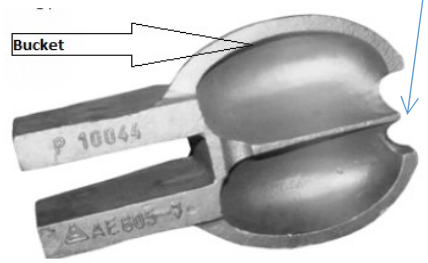

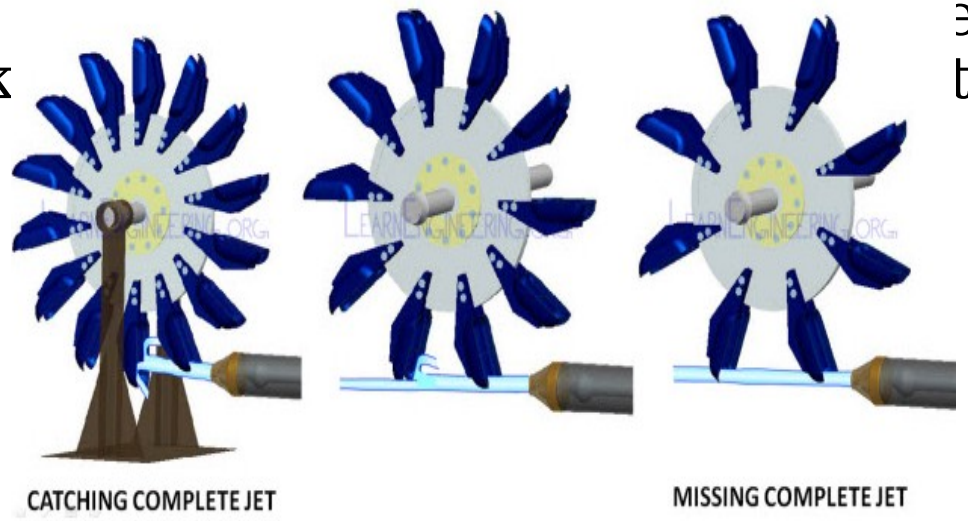

Fig.3 Effect of number of buckets on water-bucket interaction

- Number of buckets on the runner is given by:

  N=15+ where D= the pitch diameter of the Pelton

  d= the diameter of the

Reaction Turbines: Francis and Kaplan

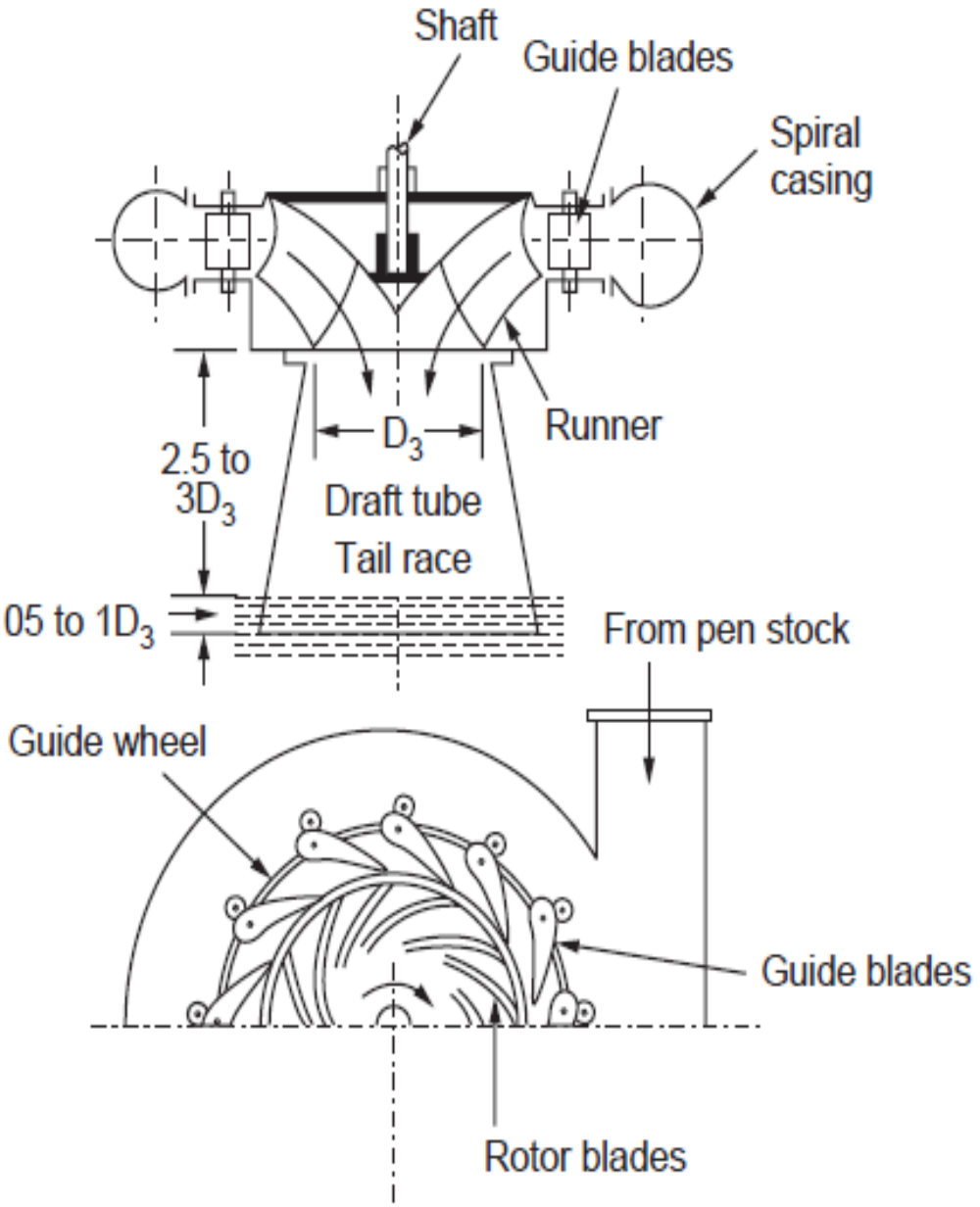

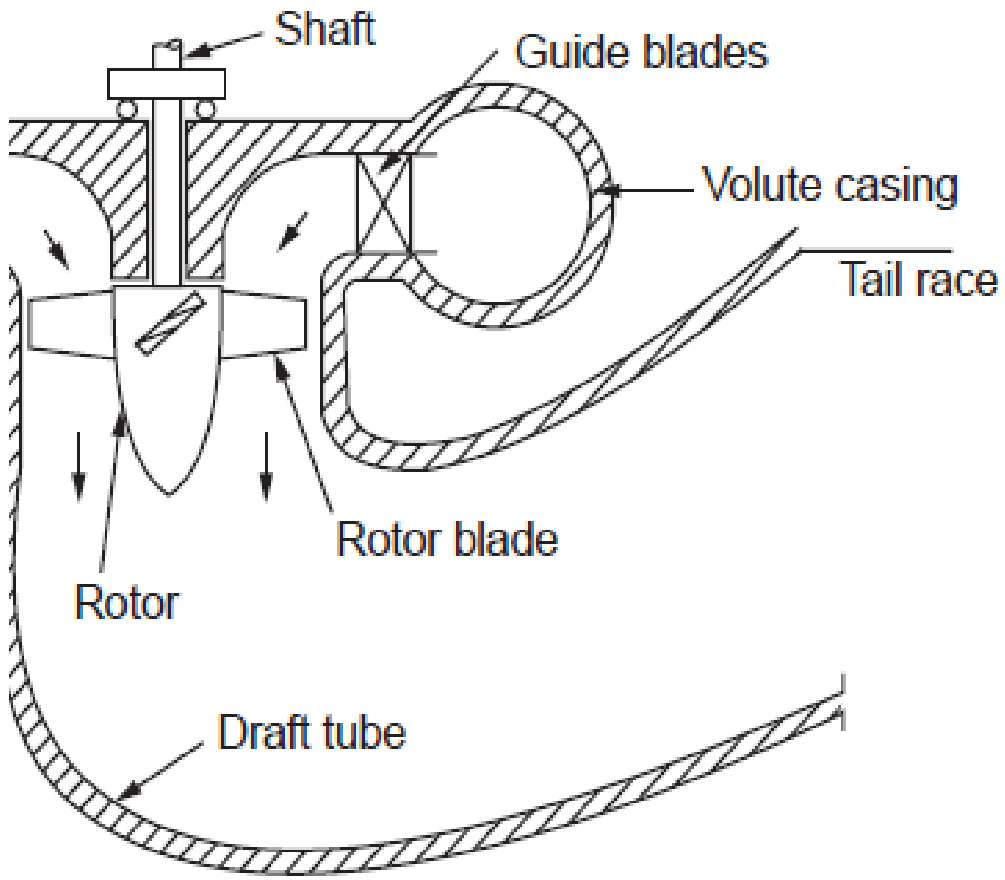

Reaction Turbines: Francis and Kaplan

- Water at the inlet of the turbine posses both KE and PE.
- As the water flow through the runner part of the energy is converted to KE.(water through runner is under pressure unlike pelton)
- Unlike impulse turbines, reaction turbines need to be fully immersed into water.
- *Francis* and *Kaplan* are the most common hydraulic reaction turbines which needs separate treatment.

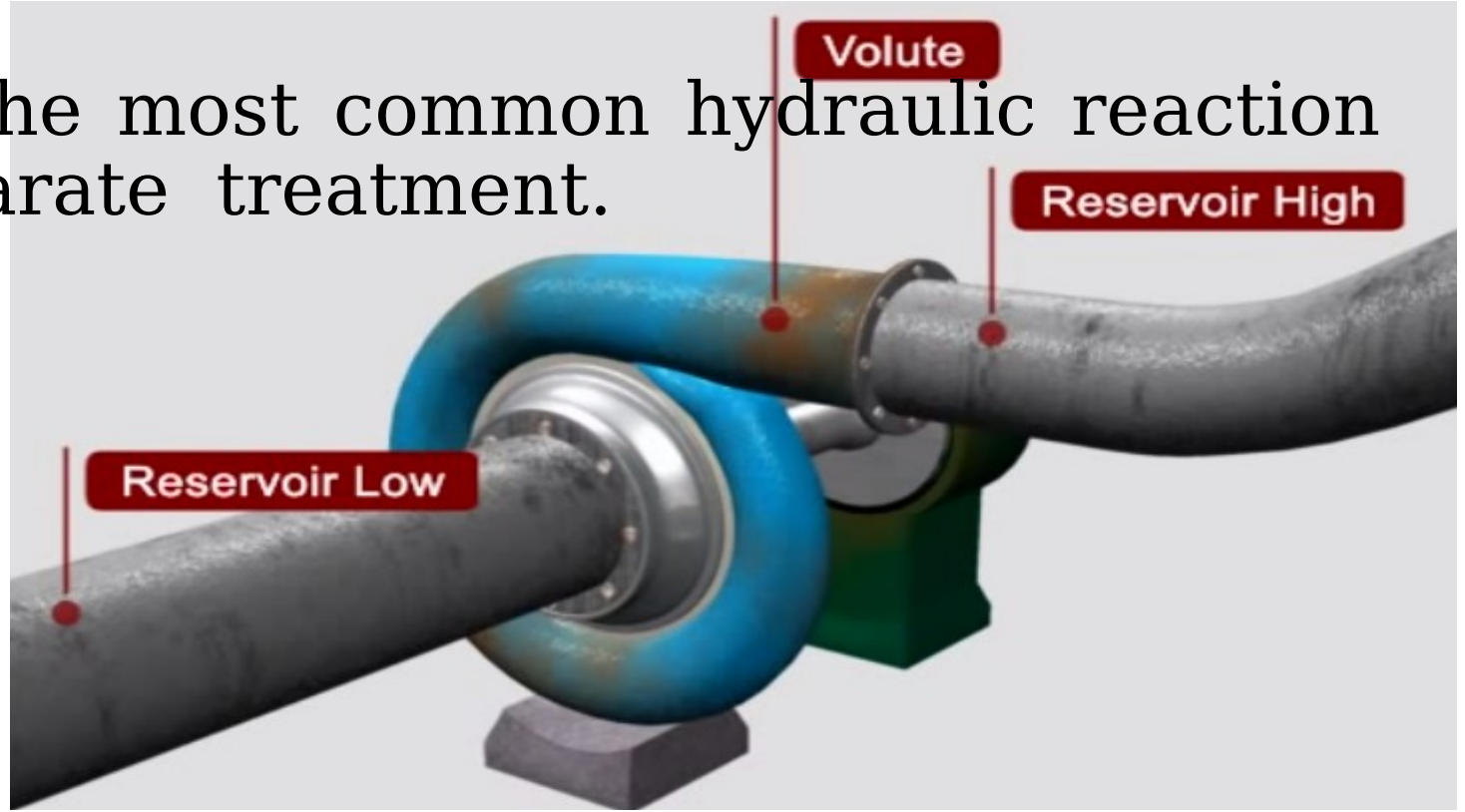

Francis Turbine

- Francis turbine is a reaction type which is the most popular and widely used hydraulic turbine. It is capable of working with **wide range of flow conditions (head and discharge)** with acceptable performance. Heads between 60 to 300m.
- Francis turbine was first developed as a purely radial flow turbine by James B. Francis, an American engineer in 1849. But the design has gradually changed into a mixed flow turbine of today.
- It has adjustable guide vanes which allows the turbine to operate with off design flow conditions with good performance.

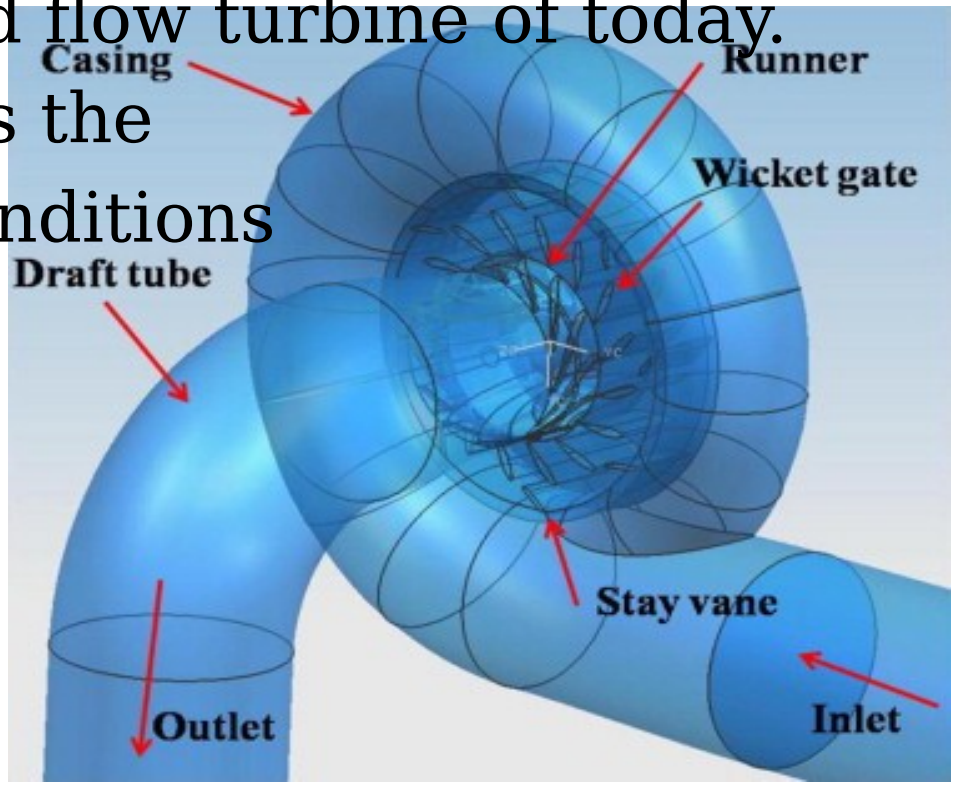

Schematic of Francis turbine assembly

- Francis turbine components

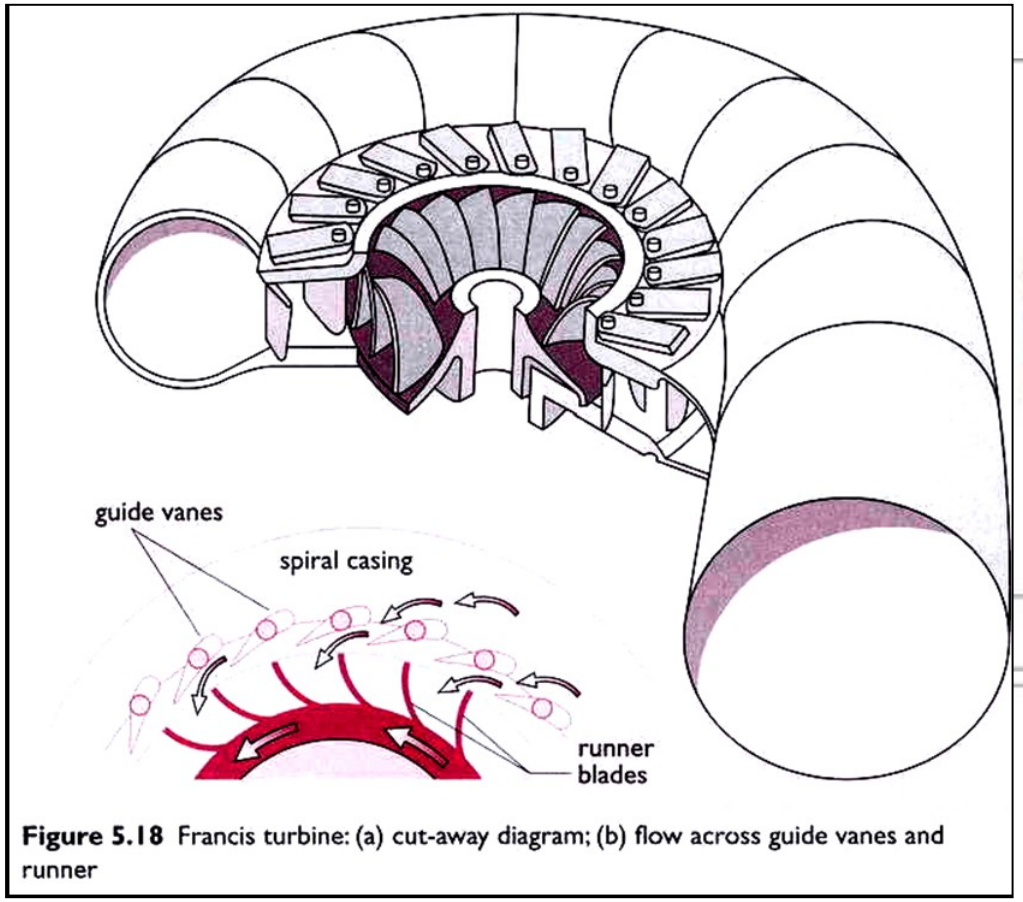

Figure 5.18 Francis turbine: (a) cut-away diagram; (b) flow across guide vanes and runner

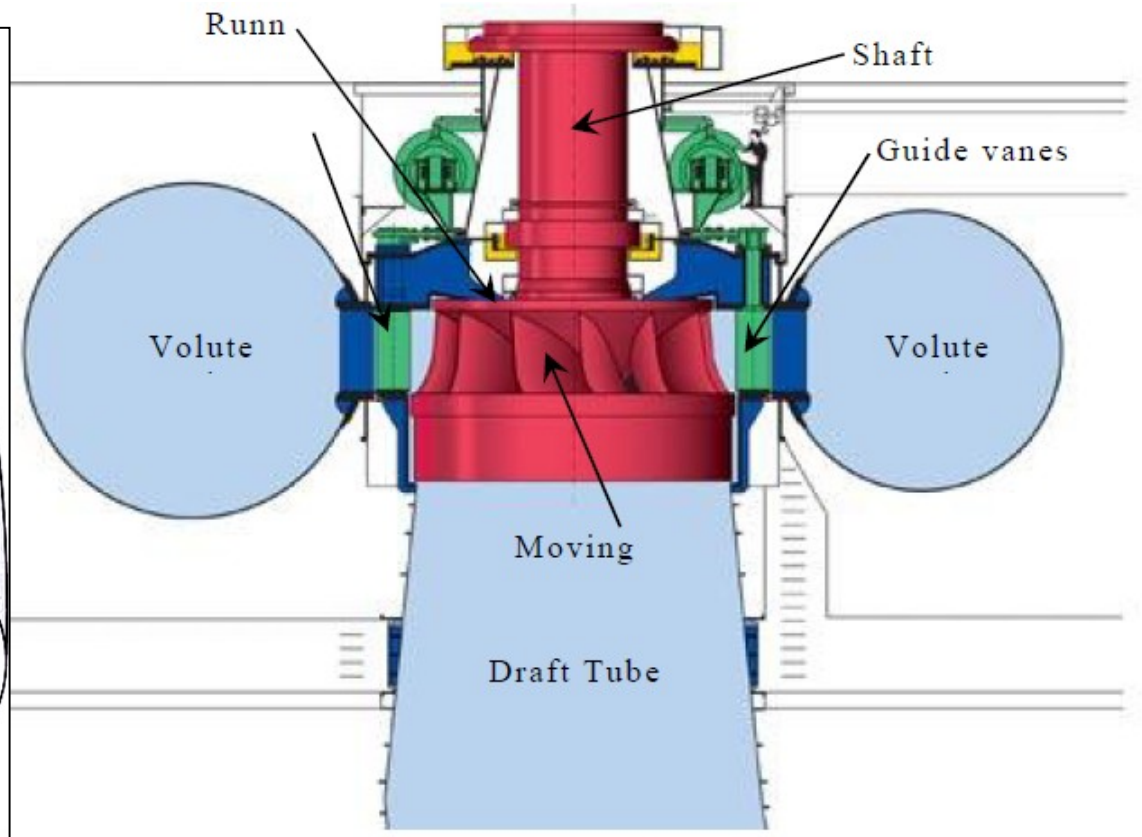

Francis Turbine Cross-section

Components

- **Runner**: It is a circular wheel on which a series of radial curve vanes are fixed. The water passes into the rotor radially through rotor vanes and leaves the rotor blades at smaller diameter. Then turns through 90 degree in to draft tube
- **Volute casing (spiral casing)**: water from penstock enter to casing which surrounds the runner of the turbine. cross-sectional area goes on decreasing gradually, to facilitate water flow at constant velocity through the circumference of the runner
- ***Guide vanes***: allow the water to strike vanes fixed on runner without shock at inlet. Stationary are followed by adjustable guide vanes to control the flow and thus the power output of the turbine.
- ***Stay Vanes***: carry the pressure loads in the spiral case and turbine head cover and also directs the flow towards the adjustable guide vanes with an optimal incidence angle
- ***Draft Tube***: It is a diffuser downstream of the runner used to convert the KE of water at turbine exit to pressure energy, (because the pressure at the exit of the rotor is less than atmospheric pressure)

Picture of Francis runner

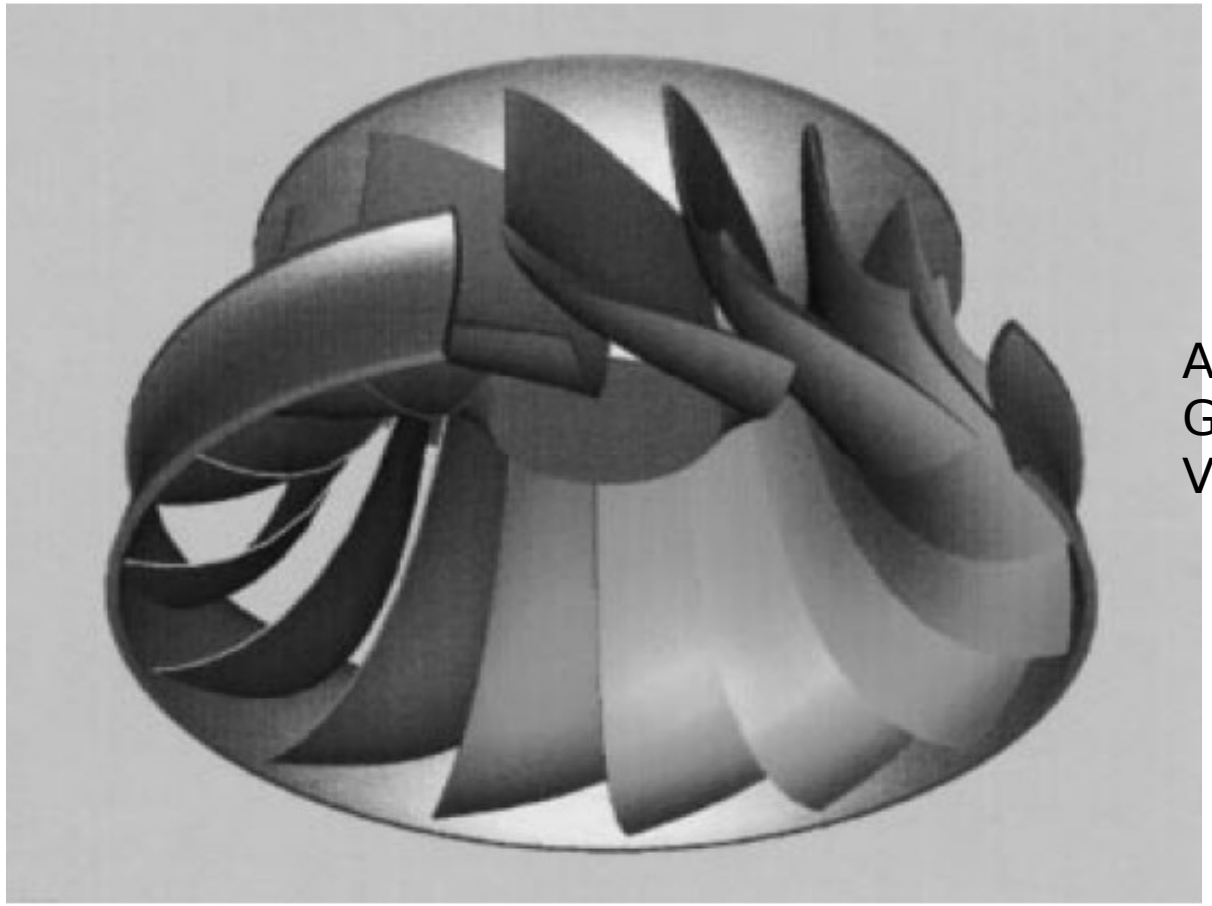

Adjustable
Guide
Vanes

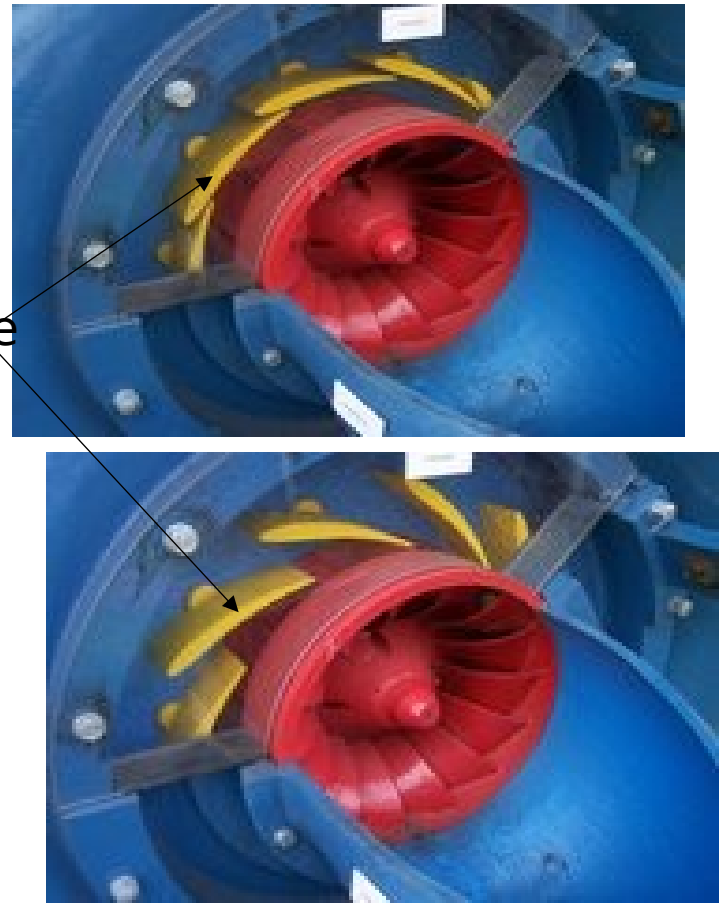

Velocity Triangle

- The water enters the turbine radially but the exit is essentially axial exit.
- Water enters runner from inlet guide vanes (@ r_1) with C_1, is inlet blade angle for shock free entry.
- In hydraulic machines it is customary t use the tangential axis as reference axi (from which angles are measured).

for max work, $Cw_2=0$

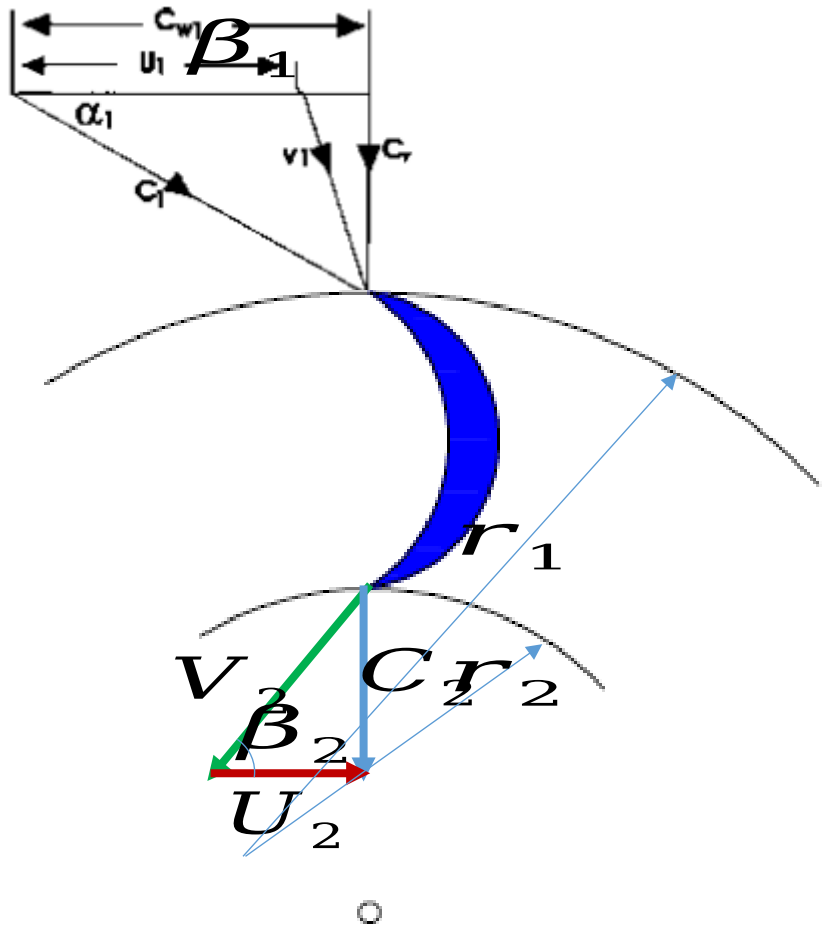

Heads and efficiencies

- Gross head (): It is the static head difference between the reservoir and the tail race.
- Net head (H): is the difference between the gross head and different head losses (Penstock friction loss, exit velocity head).

- Hydraulic efficiency,

w/h is maximum hydraulic efficiency

$$\eta_h = \frac{(P_S + P_m)}{\rho g Q H}$$

- Mechanical efficiency,

Cont....

Volumetric efficiency

- It is possible some water flows out through the clearance between the runner and casing without passing through the runner.
- Volumetric efficiency is defined as the ratio between the volume of water flowing through the runner and the total volume of water supplied to the turbine.
- , , is the effective volume flow rate that strikes the blades of the runner. is the volume flow rate from the penstock.
- Overall efficiency,

Kaplan Turbine (axial flow turbine)

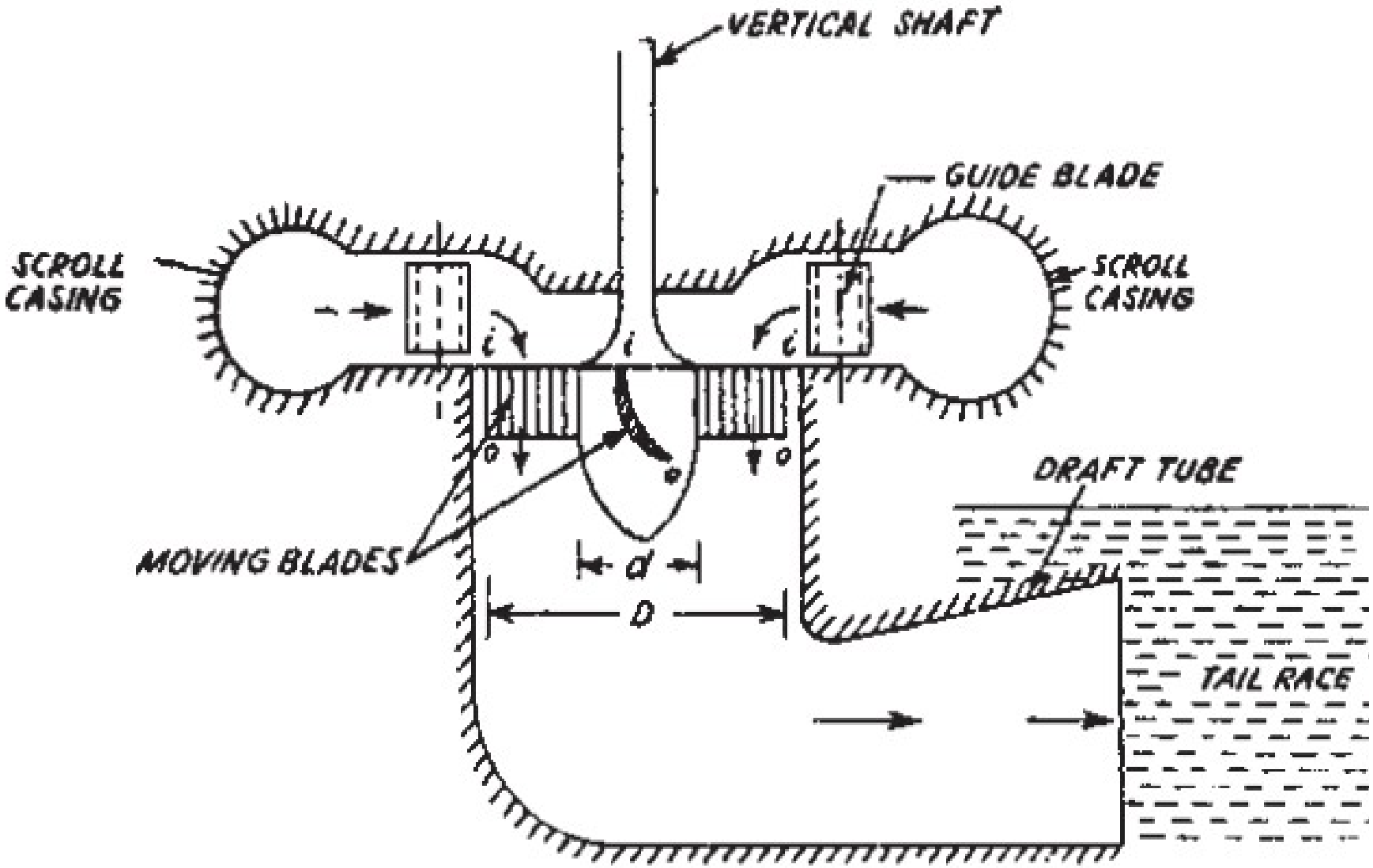

Kaplan Turbine (axial flow turbine)

- Kaplan turbine is an axial reaction turbine, with vertical shaft.
- It is a *low head, high discharge turbine* with adjustable runner blades. As a result Kaplan turbine has an excellent performance in part load or off – design flow operation.
- Lower end of the shaft is made larger known as **hub** or **boss,** which act as runner and vanes are fixed to it.
- **Propeller** is another type of axial turbine in which the vanes are fixed to the hub and are not adjustable.
- But in case *of Kaplan vanes are adjustable.*
- ***A propeller turbine*** generally has a runner with ***three*** to ***six*** blades.

Velocity triangle for Kaplan turbine

- Kaplan turbine has usually an axial exit which maximizes the specific energy transfer.
- The velocity triangles are usually drawn at the mean radius, since conditions change from hub to tip.
- The flow velocity is axial at inlet and outlet

$$C_{r1} = C_{r2} = C_a$$

$$E = U(C_{w1} - C_{w2})/g$$

and for zero whirl ($C_{w2} = 0$) at exit For maximum efficiency

$$E = UC_{w1}/g$$

- ***ncy***

definitions are similar for both Francis and Kaplan turbines can then be adapted from the previous definitions.

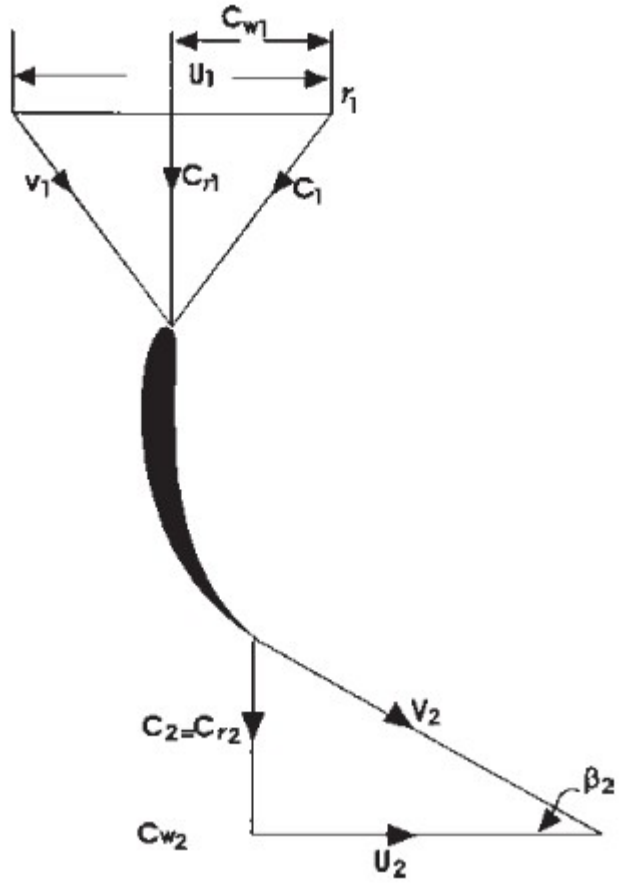

Comparison of turbines

S.No	Pelton turbine	Francis turbine
1	Impulse type	Reaction type
2	Tangential flow	Radial flow
3	Jet produced by nozzle - a fixed element	Water suppled by adjustable guide vanes
4	High head	Medium head
5	Low discharge	Medium flow
6	Specifc speed ,Ns < 0 – 1	Specific speed ,Ns 1 - 3.5
7	Turbine does not run full of water	Turbine runs full of water

Comparison of turbines cont..

Francis	Kaplan
1. Radial flow	Axial flow
2. Number of runner blades 16-20	Number of runner blades 4-6
3. Runner blades constant profile	Twisted blades (profile changes along length of the blade
4. Low efficiences	High efficiences
5. Guide vanes adjustable to change flow rate	Both guides vanes and propeller blades adjustable to control flow rate

Comparison of turbines cont..

Pelton	Kaplan
1. Impulse type	Reaction type
2. Tangential flow	Axial flow
3. Nozzle (fixed)	Guide vanes (adjustable)
4. Specific speed ($N_s < 1$)	Specific speed ($N_s > 2.3$)
5. Buckets have same profile	Blades twisted for higher efficiency

Performance curves

- The performance of each turbine can be accomplished by its
  - Specific speed
  - Power produced
  - Efficiency
  - Head of the turbine
  - The speed ratio $\varphi = u/(2gH)^{1/2}$.

- Performance curves in turbines have huge importance in prediction of an *actual operation performance*. In addition, it also gives the full picture of the *performance of the turbine for various off – design conditions.*

- *Selection* of best suitable turbine for some *specific flow condition* is solely done by referring the already documented *characteristics curves* of various turbines.

Variation of efficiency with load for Francis turbines.

- Figure shows that machines of low specific speeds have a slightly higher efficiency.
- It has been experienced that the Francis turbine has unstable characteristics for gate openings between 30 to 60%, causing pulsations in output and pressure surge in penstocks.

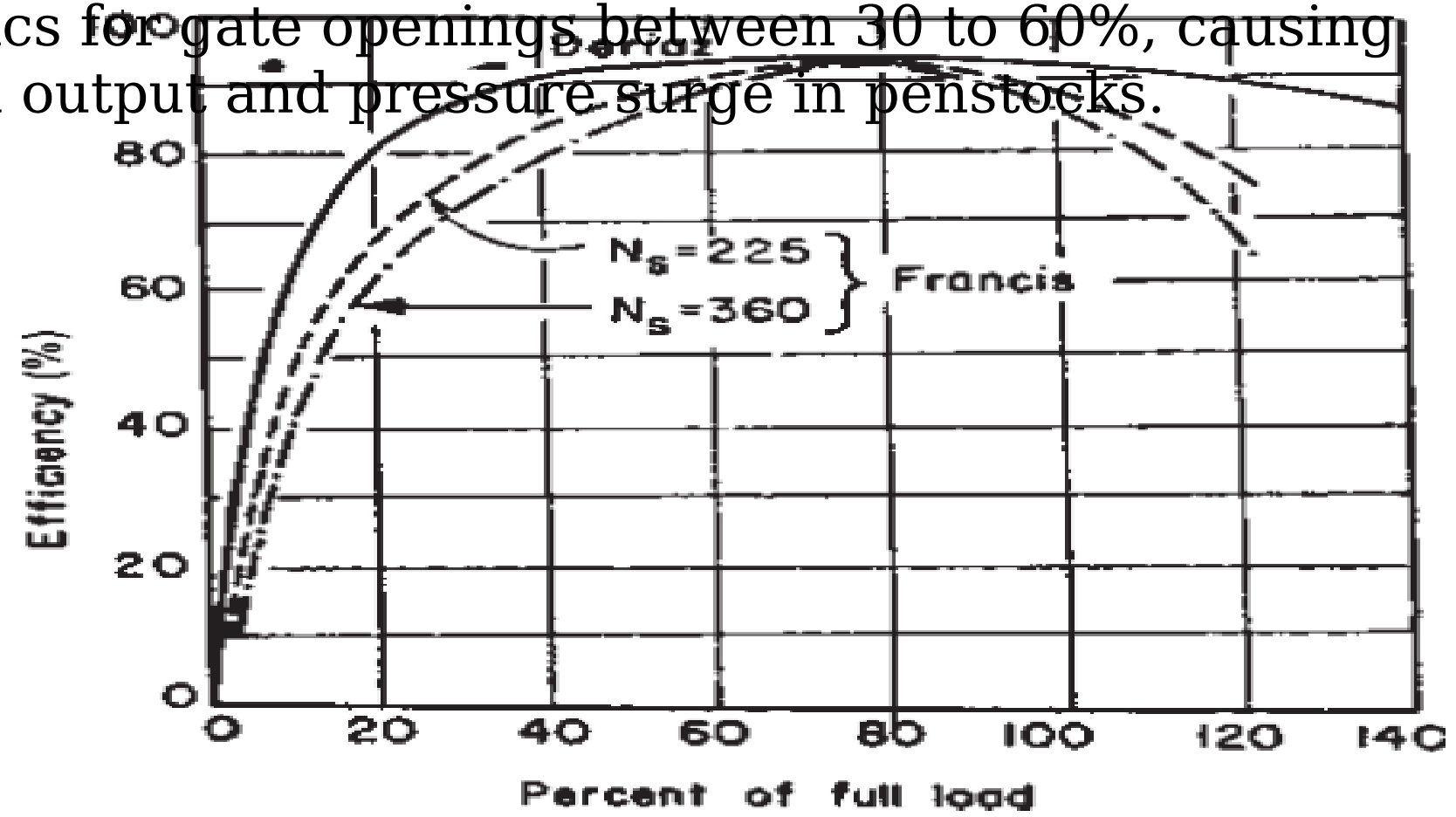

Part load performance of different turbines

- From the figure shown we can see that Kaplan and Pelton turbine have excellent performance while operating off – design (part load).
- It is followed by Francis turbines of low specific speed.
- Francis and Propeller turbines are more sensitive flow fluctuation from the design point.

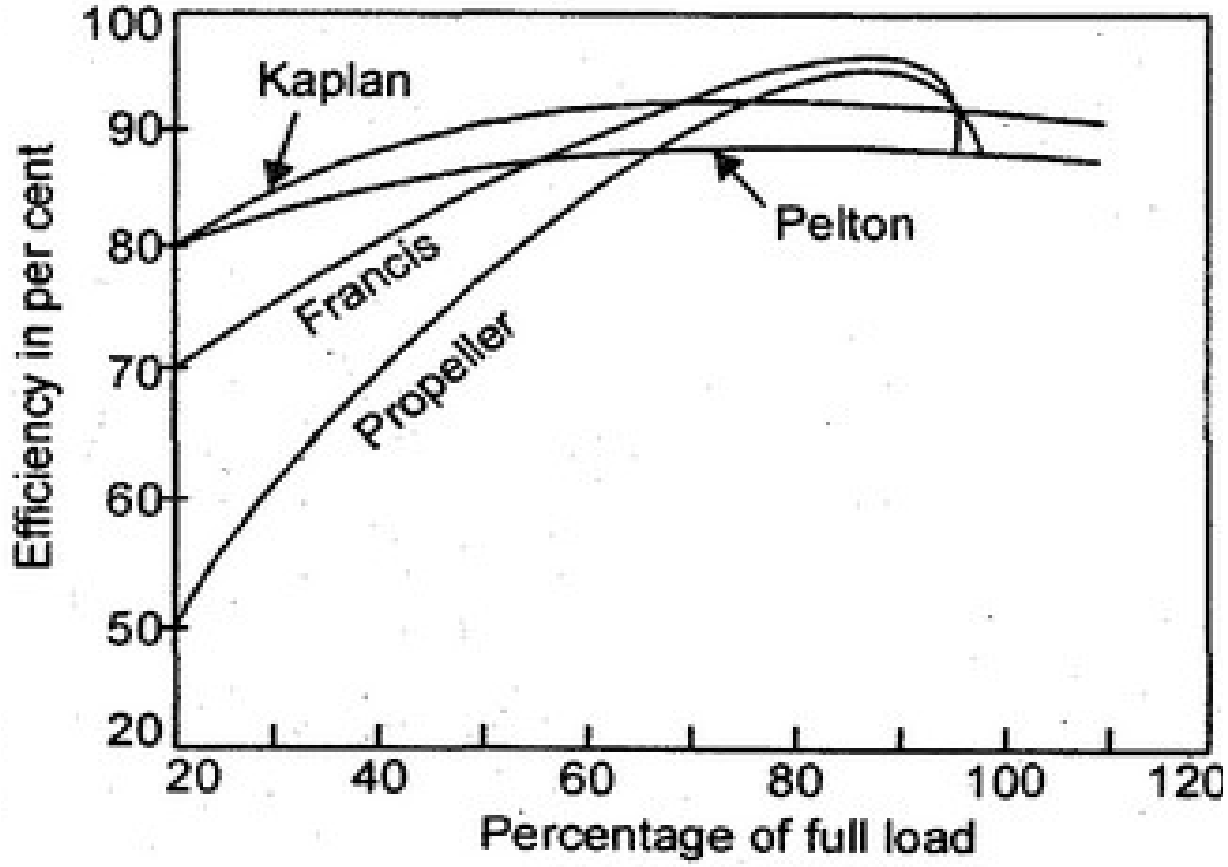

Pelton turbine characteristics curve for different percentage gate opening

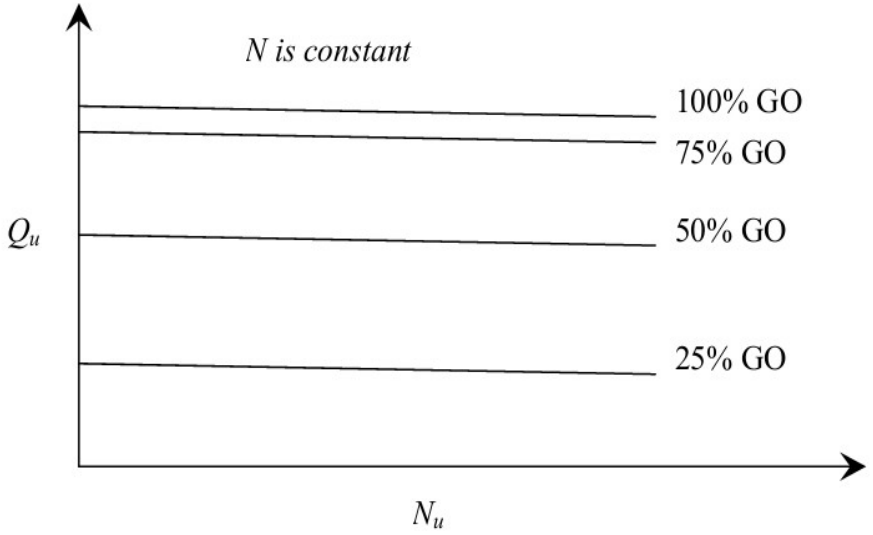

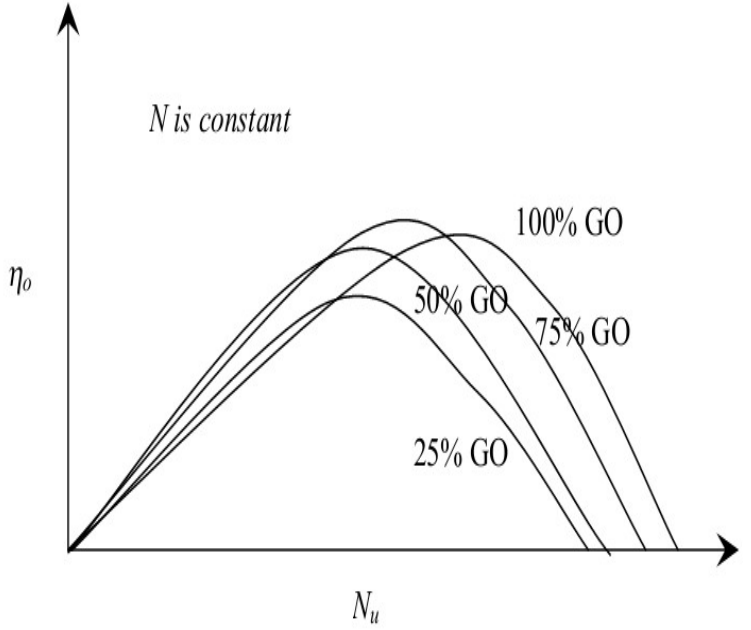

$$Unit\,discharge\,, Q_u = \frac{Q}{\sqrt{H}}$$

$$Unit\,speed\,, N_u = \frac{N}{\sqrt{H}}$$

$$Unit\,power\,, P_u = \frac{P}{H^{3/2}}$$

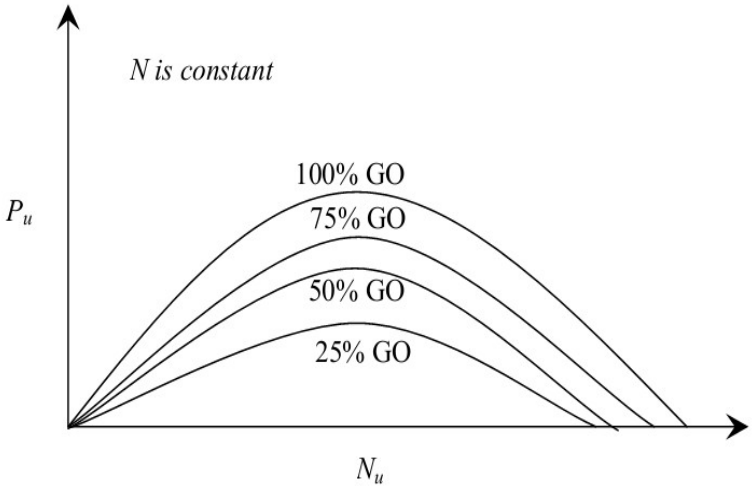

Kaplan turbine characteristics curve for different percentage gate opening

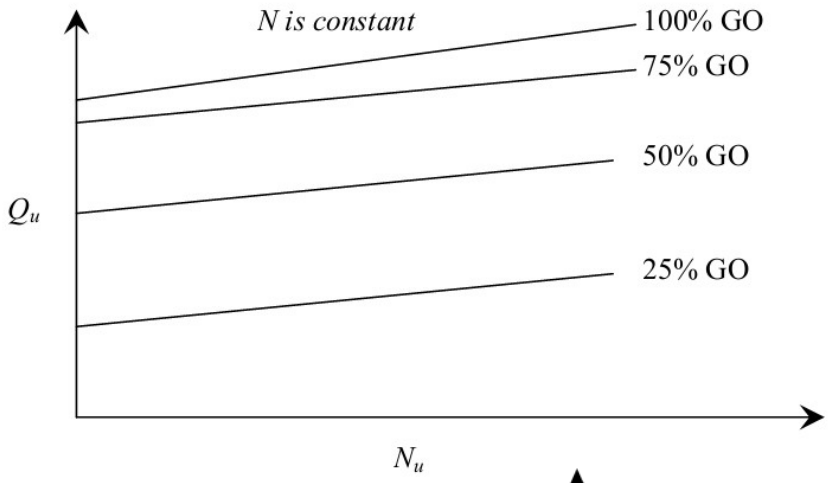

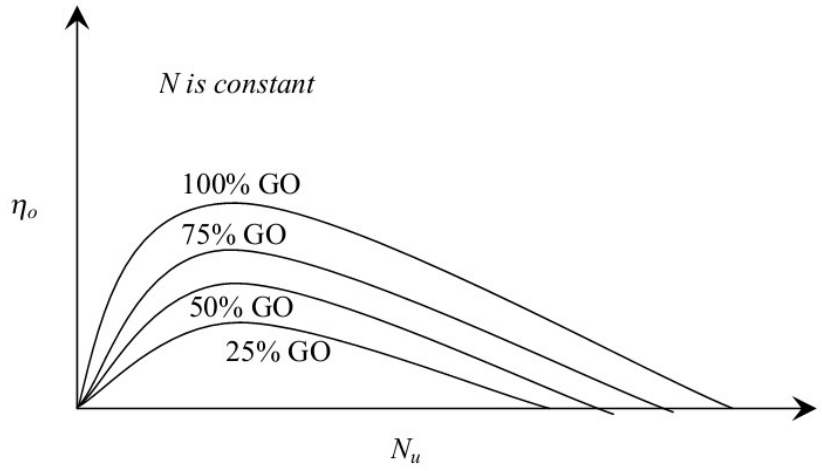

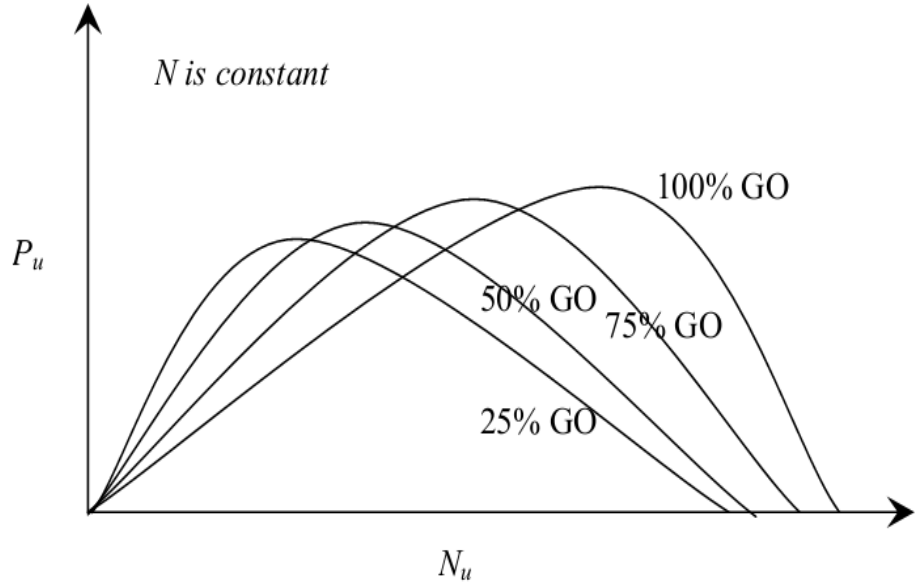

Kaplan turbine characteristics curve for different percentage gate opening

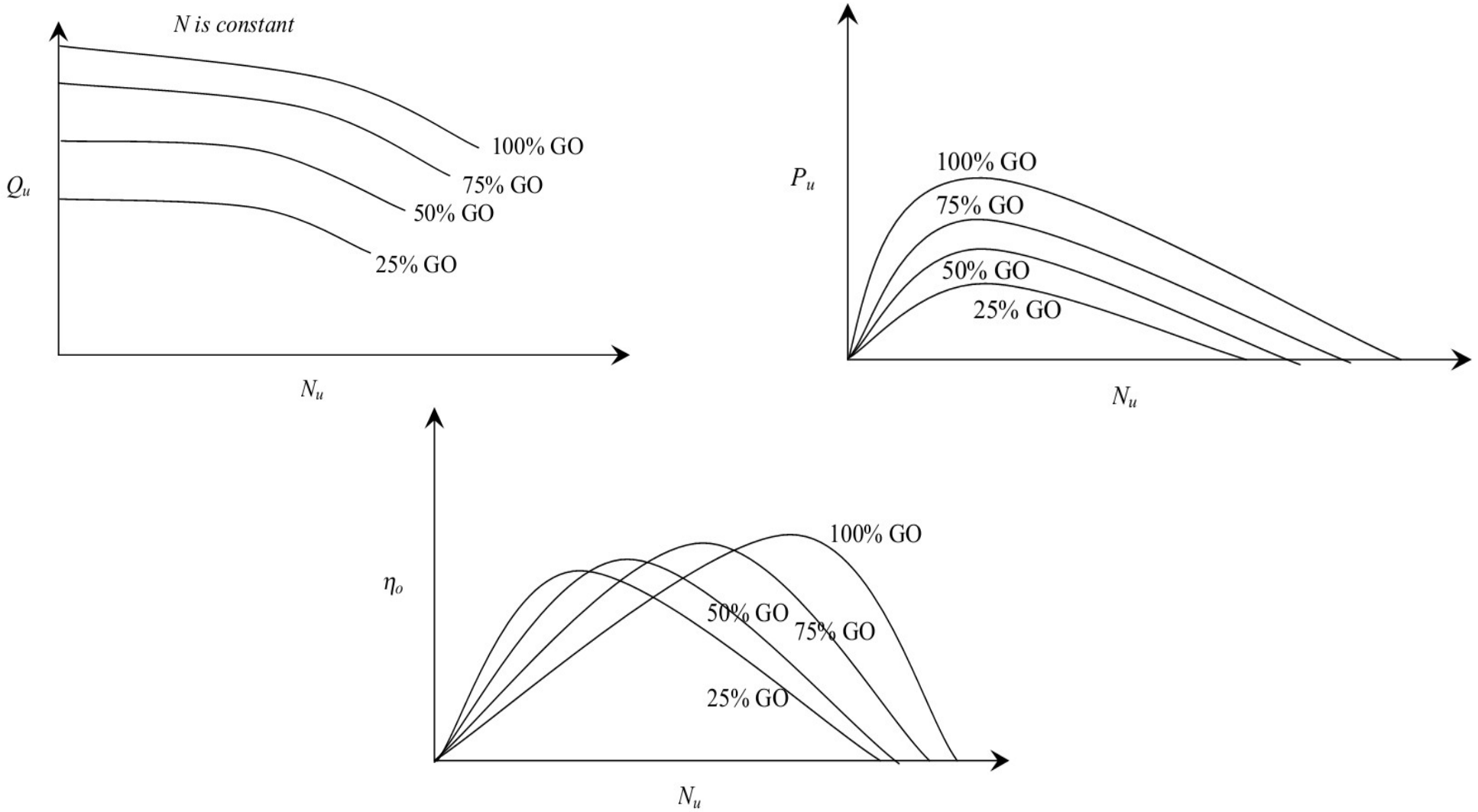

Selection of Hydraulic Turbine

- *Selection of turbine* is a highly technical job and requires great experience.
- Turbine for specific application can be selected on the bases of specific speed (which is a scientific method and gives a precise information).
- Specific speed type of turbine

  5-35 Pelton with single jet

  35-70 Pelton with 2 or more jets

  70-450 Francis

  450-1000 Kaplan

Selection can also be based on head (this method is based on experience and observation factor only)

Turbine Selection curve

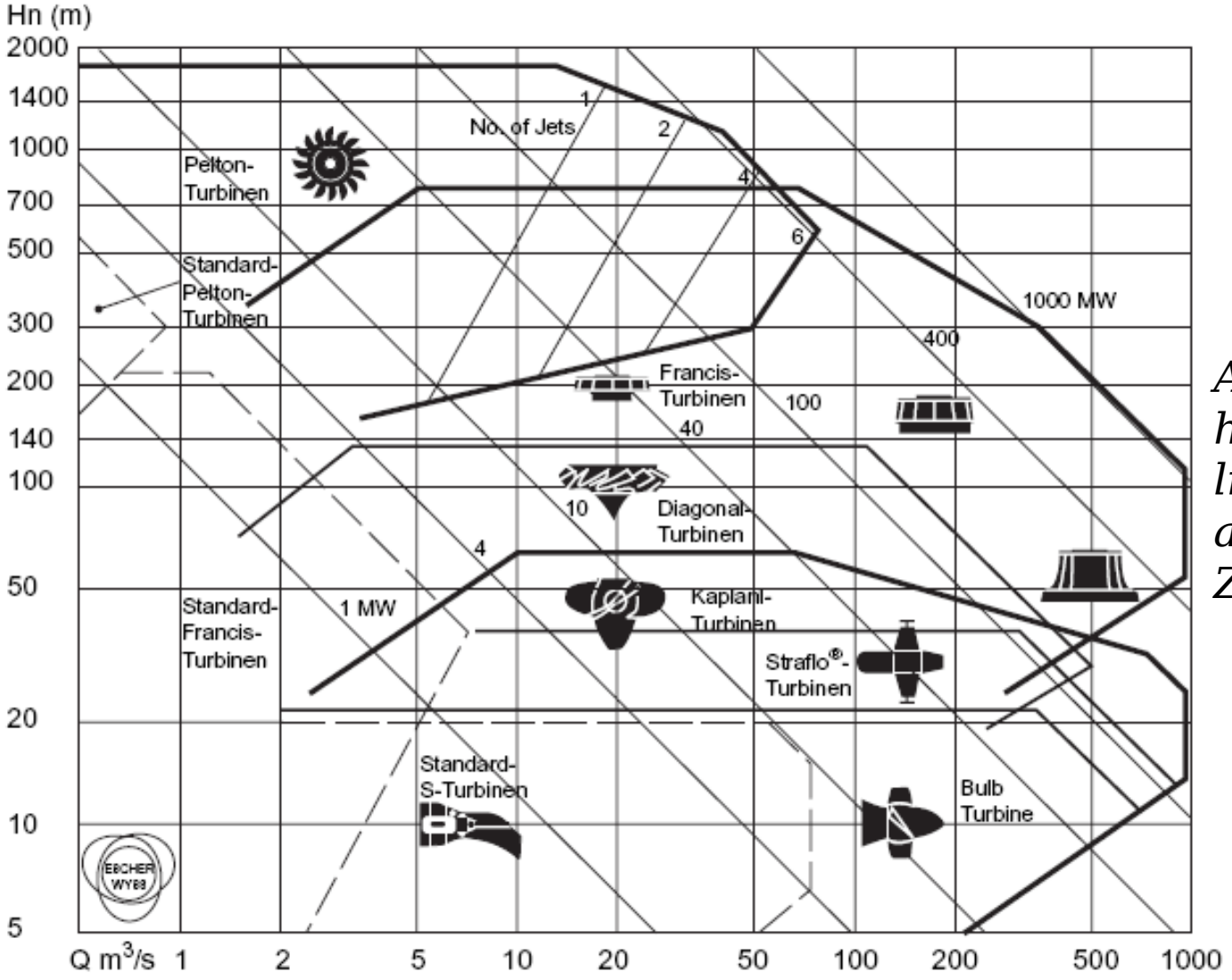

*Application range for various types of hydraulic turbines, as a plot of with lines of constant power determined assuming (Courtesy Sulzer Hydro Ltd., Zurich***)**

Draft Tube

Draft tube is one important integral part of the hydro turbine in reaction turbines which is provided just after the runner exit. It has the following purposes:

- It makes possible the installation of the turbine above the tail race level without the loss of head.
- prevents the splashing of water coming out of the runner and guides the water to the tail race.
- To create negative suction head which helps to harness the kinetic energy that would be lost at the exit, thereby increases the efficiency of the turbine.

Types of Draft tubes

Conical

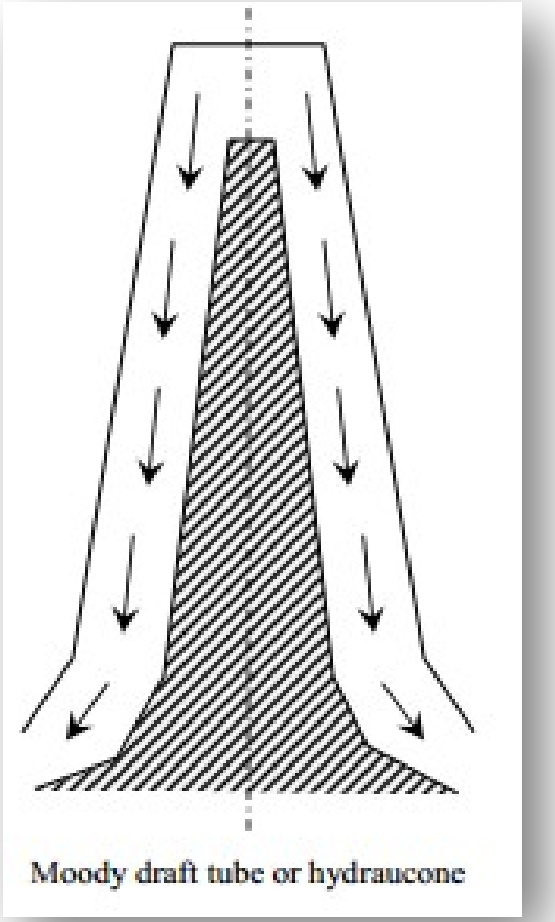

Moody draft tube or hydraucone

Elbow Type

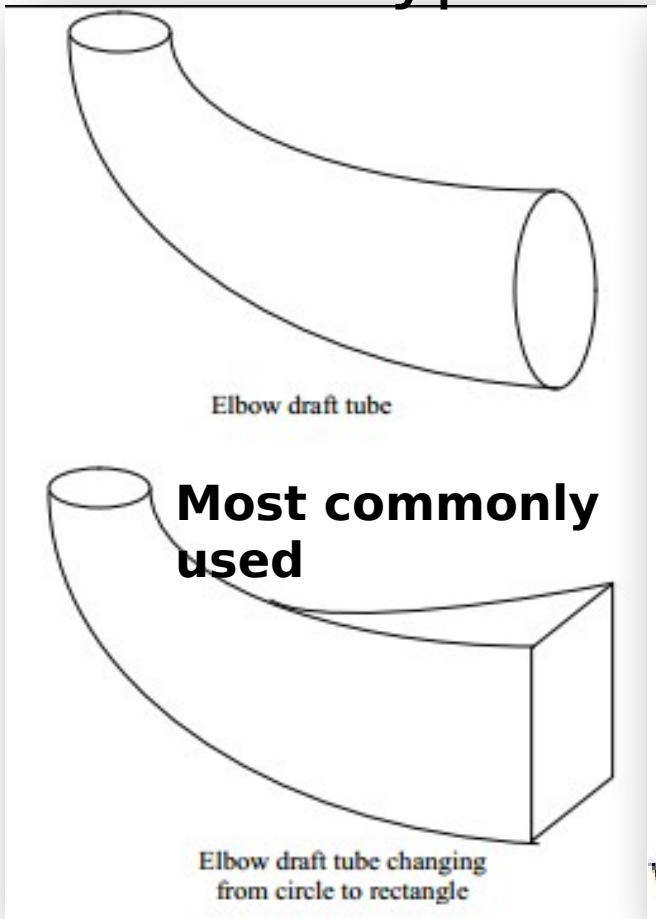

Elbow draft tube

Most commonly used

Elbow draft tube changing from circle to rectangle

Vertical divergent

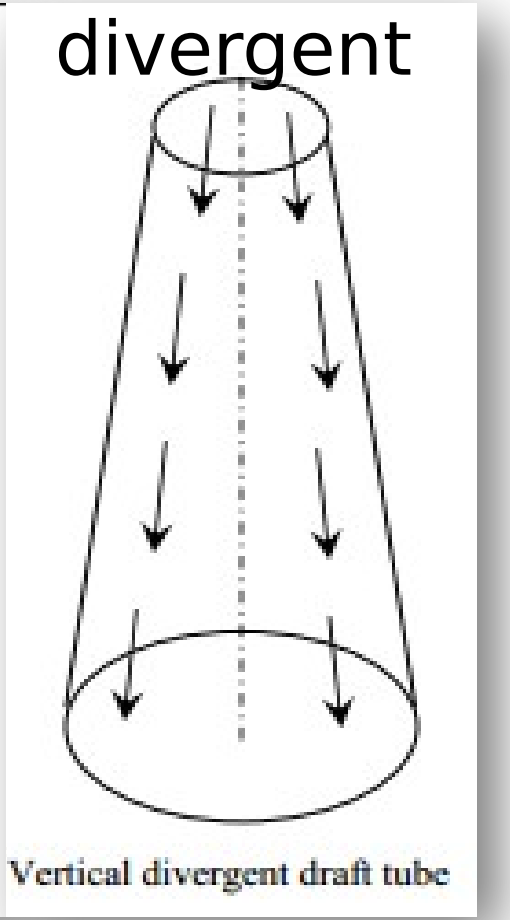

Vertical divergent draft tube

Draft Tube analysis

- Applying simple Bernoulli's equation between the turbine exit and the tailrace:

but , and where is head loss in the draft tube

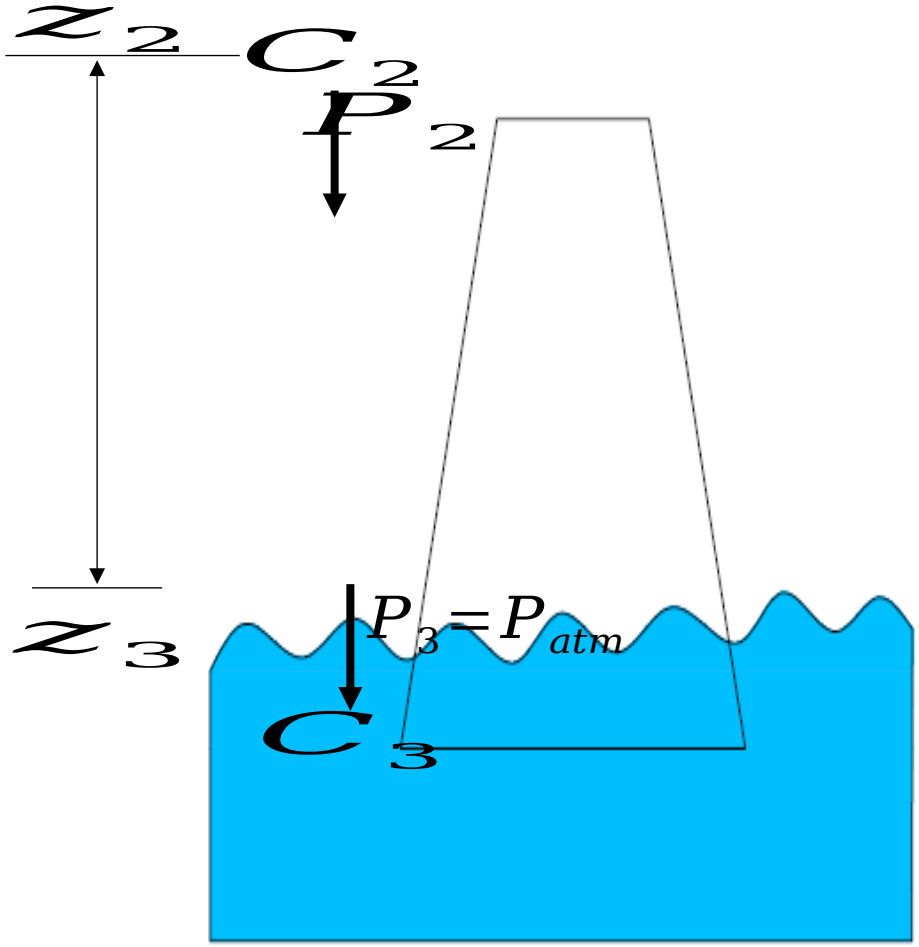

Cont…

- is part of the gross static head regardless of the presence of the draft tube and is not the contribution of the draft tube.
- There fore the head that is harnessed with the draft tube that would be lost unless otherwise is given by

Draft tube efficiency can then be defined as:

Cavitation

- The concept of cavitation that has been discussed in centrifugal pumps is the same for turbines also.
- Thomas coefficient is usually used as a cavitation parameter in hydraulic turbines.

- Each turbine has its critical value of Thomas coefficient. Therefore, for safe operation

Critical Thoma coefficient for different specific speeds

	Francis	Francis	Francis	Francis	Francis	Kaplan	Kaplan	Kaplan
n_s	20	40	60	80	100	100	150	200
σ_c	0,025	0,1	0,23	0,4	0,64	0,43	0,73	1,5

Cavitation regions in reaction turbines

Leading edge cavitation: attached cavity on the suction side of the runner blades due to higher than nominal heads.

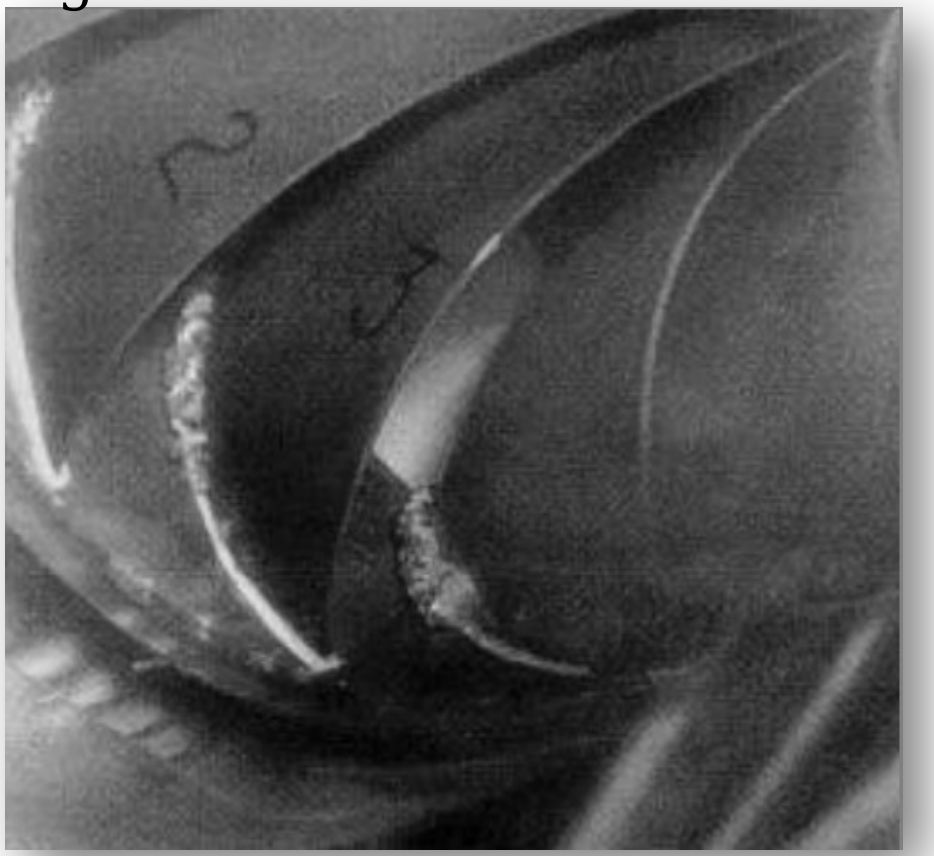

Travelling bubble cavitation: separated bubbles attached to blade suction side near mid-chord next to the trailing edge.

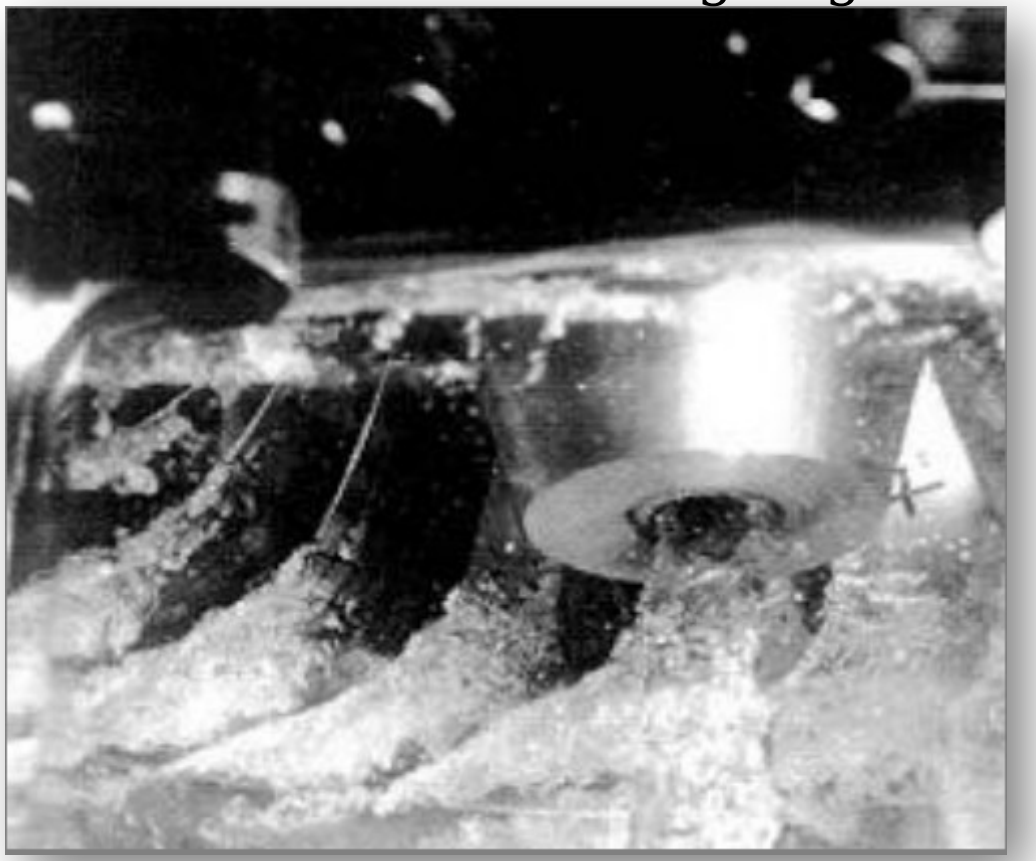

Cont...

Draft tube swirl cavitation: cavitation vortex-core flow that is formed just below the runner cone in the center of the draft tube.

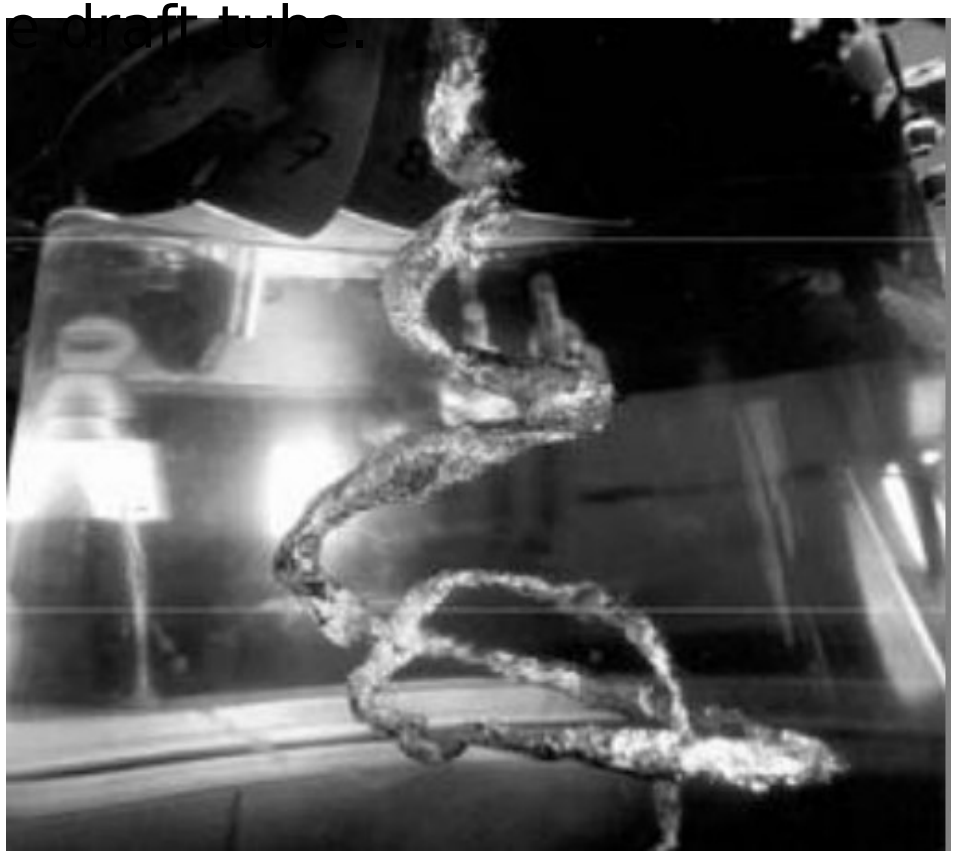

Inter blade vortex cavitation: due to the flow separation provoked by the incidence variation from the hub to the band.

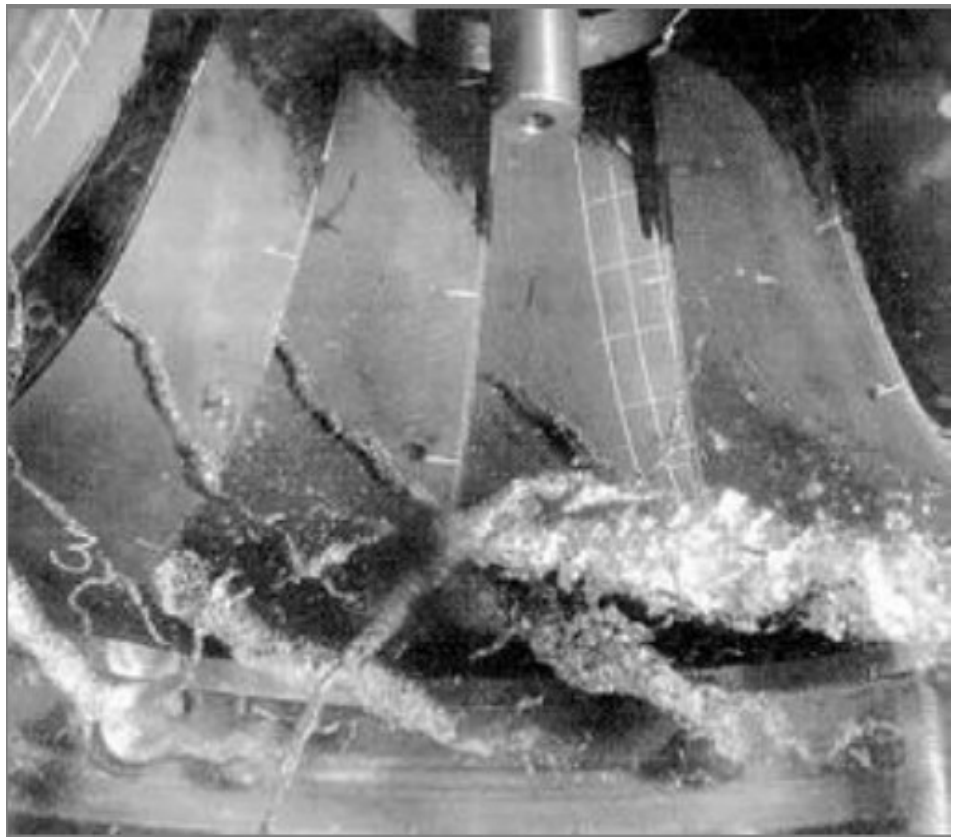

Example 1

A Pelton wheel is supplied with 0.035 m^3/s of water under a head of 92 m. The wheel rotates at 725 rpm and the velocity coefficient of the nozzle is 0.95. The efficiency of the wheel is 82% and the ratio of bucket speed to jet speed is 0.45. Determine the following:

1. Speed of the wheel
2. Wheel to jet diameter ratio
3. Dimensionless power specific speed of the wheel

Solution:

Overall efficiency $\eta_o = \dfrac{\text{Power developed}}{\text{Power available}}$

$$\therefore\ P = \rho g Q H \eta_o \text{ J/s} = \frac{\rho g Q H \eta_o}{1000} \text{ kW}$$

$$= 9.81(0.035)(92)(0.82) = 25.9 \text{ kW}$$

Velocity coefficient

$$C_v = \frac{C_1}{\sqrt{2gH}}$$

or $C_1 = C_v\sqrt{2gH} = 0.95[(2)(9.81)(92)]^{1/2} = 40.36$ m/s

1. Speed of the wheel is given by

$$U = 0.45(40.36) = 18.16 \text{ m/s}$$

2. If D is the wheel diameter, then

$$U = \frac{\omega D}{2} \quad or \quad D = \frac{2U}{\omega} = \frac{(2)(18.16)(60)}{725(2\pi)} = 0.478\,\text{m}$$

Jet area $A = \dfrac{Q}{C_1} = \dfrac{0.035}{40.36} = 0.867 \times 10^{-3}\text{m}^2$

and Jet diameter, d, is given by

$$d = \left(\frac{4A}{\pi}\right)^{1/2} = \left(\frac{(4)(0.867 \times 10^{-3})}{\pi}\right)^{1/2} = 0.033\,\text{m}$$

Diameter ratio $\dfrac{D}{d} = \dfrac{0.478}{0.033} = 14.48$

3. Dimensionless specific speed is given

$$N_{\text{sp}} = \frac{NP^{1/2}}{\rho^{1/2}(gH)^{5/4}}$$

$$= \left(\frac{725}{60}\right) \times \left(\frac{(25.9)(1000)}{10^3}\right)^{1/2} \times \left(\frac{1}{(9.81) \times (92)}\right)^{5/4}$$

$$= (12.08)(5.09)(0.0002)$$

$$= 0.0123\,\text{rev}$$

$$= (0.0123)(2\pi)\,\text{rad}$$

$$= 0.077\,\text{rad}$$

Examples 2

A Pelton wheel develops 12,900 kW at 425 rpm

under a head of 505 m. The efficiency of the machine is 84%. Find (1) discharge of the turbine, (2) diameter of the wheel, and (3) diameter of the nozzle. Assume $C_v = 0.98$, and ratio of bucket speed to jet speed $= 0.46$.

Solution:

Head, $H = 505$ m.

Power, $P = 12{,}900$ kW

Speed, $N = 425$ rpm

Efficiency, $\eta_o = 84\%$

1. Let Q be the discharge of the turbine

Using the relation $\eta_O = \dfrac{P}{9.81QH}$

or

$$0.84 = \frac{12,900}{(9.81)(505)Q} = \frac{2.60}{Q}$$

or

$$Q = 3.1 \text{ m}^3/\text{s}$$

2. Velocity of jet

$$C = C_V\sqrt{2gH} \text{ (assume } C_V = 0.98)$$

or

$$C = 0.98\sqrt{(2)(9.81)(505)} = 97.55 \text{ m/s}$$

Tangential velocity of the wheel is given by

$$U = 0.46C = (0.46)(97.55) = 44.87 \text{ m/s}$$

3. Let d be the diameter of the nozzle

The discharge through the nozzle must be equal to the discharge of the turbine. Therefore

$$Q = \tfrac{\pi}{4} \times d^2 \times C$$

$$3.1 = (\tfrac{\pi}{4})(d^2)(97.55) = 76.65\, d^2$$

$$\therefore\ d = \sqrt{\frac{3.1}{76.65}} = 0.20 \text{ m}$$

$U = \dfrac{\pi DN}{60}$, hence wheel diameter is

$$D = \frac{60U}{\pi N} = \frac{(60)(44.87)}{(\pi)(425)} = 2.016 \text{ m}$$

Example3

At the power station, a Pelton wheel produces 1260 kW under a head of 610 m. The loss of head due to pipe friction between the reservoir and nozzle is 46 m. The buckets of the Pelton wheel deflect the jet through an angle of 165°, while relative velocity of the water is reduced by 10% due to bucket friction. The bucket/jet speed ratio is 0.46. The bucket circle diameter of the wheel is 890 mm and there are two jets. Find the theoretical hydraulic efficiency, speed of rotation of the wheel, and diameter of the nozzle if the actual hydraulic efficiency is 0.9 times that calculated above. Assume nozzle velocity coefficient, $C_v = 0.98$.

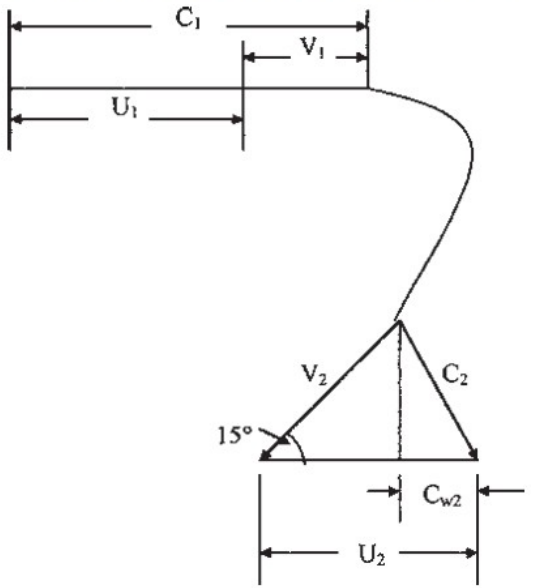

Velocity triangle for Example 3

Solution:

$$\text{Hydraulic efficiency } \eta_h = \frac{\text{Power output}}{\text{Energy available in the jet}} = \frac{P}{0.5mC_1^2}$$

At entry to nozzle

$$H = 610 - 46 = 564\,\text{m}$$

Using nozzle velocity coefficient

$$C_1 = C_v\sqrt{2gH} = 0.98\sqrt{(2)(9.81)(564)} = 103.1\,\text{m/s}$$

Now

$$\frac{W}{m} = U_1C_{w1} - U_2C_{w2}$$
$$= U\{(U + V_1) - [U - V_2\cos(180° - \alpha)]\}$$
$$= U[(C_1 - U)(1 - k\cos\alpha)] \text{ where } V_2 = kV_1$$

Therefore, $W/m = 0.46C_1(C_1 - 0.46C_1)(1 - 0.9\cos 165°)$

Substitute the value of C_1

$$W/m = 5180.95$$

$$\text{Theoretical hydraulic efficiency} = \frac{\text{Power output}}{\text{Energy available in the jet}}$$
$$= \frac{5180.95}{0.5 \times 103^2} = 98\%$$

Actual hydraulic efficiency $= (0.9)(0.98) = 0.882$

Wheel bucket speed $= (0.46)(103) = 47.38\,\text{m/s}$

$$\text{Wheel rotational speed} = N = \frac{(47.38)(60)}{(0.445)(2\pi)} = 1016\,\text{rpm}$$

$$\text{Actual hydraulic efficiency} = \frac{\text{Actual power}}{\text{energy in the jet}} = \frac{(1260 \times 10^3)}{0.5\,mC_1^2}$$

Therefore, $m = \dfrac{(1260 \times 10^3)}{(0.882)(0.5)(103^2)} = 269\,\text{kg/s}$

For one nozzle, $m = 134.5\,\text{kg/s}$

For nozzle diameter, using continuity equation, $m = \rho C_1 A = \dfrac{\rho C_1 \pi d^2}{4}$

Hence, $d = \sqrt{\dfrac{(134.5)(4)}{(\pi)(103 \times 10^3)}} = 0.041\,\text{m} = 41\,\text{mm}$

Example 4

A Pelton turbine is driven by two jets, generating 4.0 MW at 375 rev/min. The effective head at the nozzles is 200 m of water and the nozzle velocity coefficient, $K_N = 0.98$. The axes of the jets are tangent to a circle 1.5 m in diameter. The relative velocity of the flow across the buckets is decreased by 15% and the water is deflected through an angle of 165 deg.

Neglecting bearing and windage losses, determine

(i) the runner efficiency;
(ii) the diameter of each jet;
(iii) the power specific speed.

Cont...

Solution. (i) The blade speed is

$$U = \Omega r = (375 \times \pi/30) \times 1.5/2$$

$$= 39.27 \times 1.5/2 = 29.45\ \text{m/s}.$$

The jet speed is

$$c_1 = K_N\sqrt{2gH_E} = 0.98 \times \sqrt{(2 \times 9.81 \times 200)} = 61.39\ \text{m/s}$$

$$\therefore \nu = U/c_1 = 0.4798.$$

The efficiency of the runner is obtained from eqn. (9.4)

$$\eta_R = 2 \times 0.4798 \times (1 - 0.4798)(1 - 0.85 \times \cos 165^\circ)$$

$$= 0.9090.$$

Cos θ=-cosθ @2nd quadr..

Cont...

(ii) The "theoretical" power is $P_{\text{th}} = P/\eta_R = 4.0/0.909 = 4.40\,\text{MW}$ where $P_{\text{th}} = \rho g Q H_E$

$$\therefore Q = P_{\text{th}}/(\rho g H_E) = 4.4 \times 10^6/(9810 \times 200) = 2.243\,\text{m}^3/\text{s}.$$

Each jet must have a flow area of

$$A_j = \frac{Q}{2c_1} = 2.243/(2 \times 61.39) = 0.01827\,\text{m}^2.$$

$$\therefore d_j = 0.1525\,\text{m}.$$

(iii) Substituting into eqn. (9.1), the power specific speed is

$$\Omega_{sp} = 39.27 \times \left(\frac{4.0 \times 10^6}{10^3}\right)^{1/2} /(9.81 \times 200)^{5/4}$$

$$= 0.190\,\text{rad}.$$

Example 5 Consider an inward flow reaction turbine in which velocity of flow at inlet is 3.8 m/s. The 1 m diameter wheel rotates at 240 rpm and absolute velocity makes an angle of 16° with wheel tangent. Determine (1) velocity of whirl at inlet, (2) absolute velocity of water at inlet, (3) vane angle at inlet, and (4) relative velocity of water at entrance.

1. From inlet velocity triangle (subscript 1)

$$\tan\alpha_1 = \frac{C_{r1}}{C_{w1}} \text{ or } C_{w1} = \frac{C_{r1}}{\tan\alpha_1} = \frac{3.8}{\tan 16^\circ} = 13.3 \text{ m/s}$$

2. Absolute velocity of water at inlet, C_1, is

$$\sin\alpha_1 = \frac{C_{r1}}{C_1} \text{ or } C_1 = \frac{C_{r1}}{\sin\alpha_1} = \frac{3.8}{\sin 16^\circ} = 13.79 \text{ m/s}$$

3.

$$U_1 = \frac{(\pi D_1)(N)}{60} = \frac{(\pi)(1)(240)}{60} = 12.57 \text{ m/s}$$

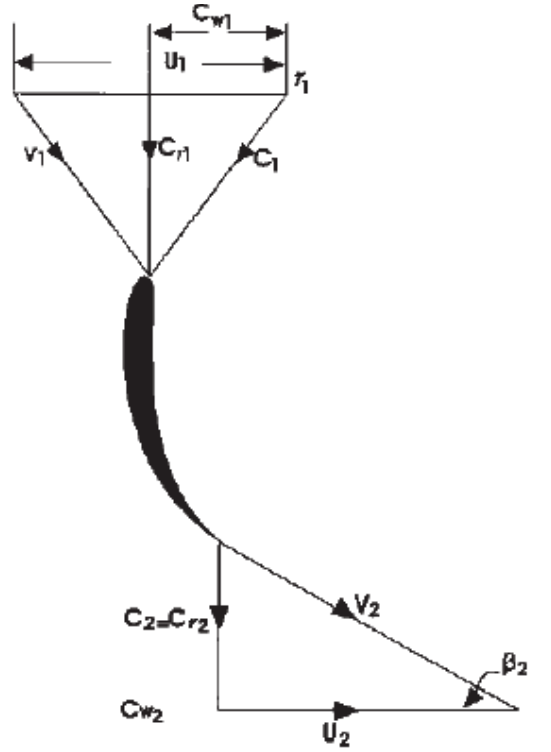

3.18 Velocity triangles for an axial flow hydraulic

and

$$\tan \beta_1 = \frac{C_{r1}}{(C_{w1} - U_1)} = \frac{3.8}{(13.3 - 12.57)} = \frac{3.8}{0.73} = 5.21$$

$$\therefore \ \beta_1 = 79^\circ \text{ nearby}$$

4. Relative velocity of water at entrance

$$\sin \beta_1 = \frac{C_{r1}}{V_1} \ \ or \ \ V_1 = \frac{C_{r1}}{\sin \beta_1} = \frac{3.8}{\sin 79^\circ} = 3.87 \text{m/s}$$

Example 6

The following design data apply to an inward flow radial turbine:

Overall efficiency	75%
Net head across the turbine	6 m
Power output	128 kW
The runner tangential velocity	10.6 m/s
Flow velocity	4 m/s
Runner rotational speed	235 rpm
Hydraulic losses	18% of energy available

Calculate the inlet guide vane angle, the inlet angle of the runner vane, the runner diameter at inlet, and height of the runner at inlet. Assume that the discharge is radial.

Solution:

Hydraulic efficiency, η_h, is given by

$$\eta_h = \frac{\text{Power given to runner}}{\text{Water Power available}} = \frac{m(U_1 C_{w1} - U_2 C_{w2})}{\rho g Q H}$$

Since flow is radial at exit, $C_{w2} = 0$ and $m = \rho Q$. Therefore

$$\eta_h = \frac{U_1 C_{w1}}{gH}$$

$$0.82 = \frac{(10.6)(C_{w1})}{(9.81)(6)} \quad \text{or} \quad C_{w1} = 4.6 \text{ m/s}$$

Now

$$\tan \alpha_1 = C_{r1}/C_{w1} = \frac{4}{4.6} = 0.8695$$

that is, $\alpha_1 = 41°$

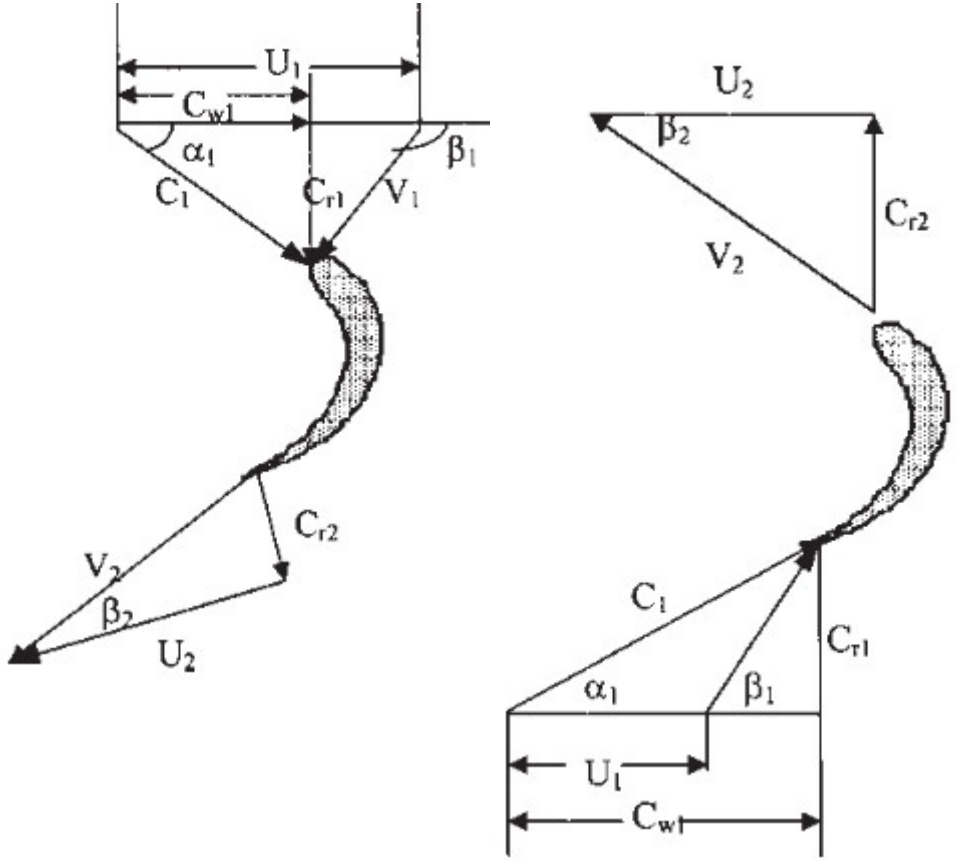

$$\tan(180 - \beta_1) = \frac{C_{r1}}{U_1 - C_{w1}} = \frac{4}{10.6 - 4.6} = 0.667$$

that is, $\beta_1 = 33.69°$

Hence blade angle, β_1, is given by

$$180° - 33.69° = 146.31°$$

Runner speed at inlet

$$U_1 = \frac{\pi D_1 N}{60}$$

or

$$D_1 = \frac{U_1(60)}{\pi N} = \frac{(10.6)(60)}{(\pi)(235)} = 0.86\,\text{m}$$

Overall efficiency

$$\eta_o = \frac{\text{Power output}}{\text{Power available}}$$

$$\rho g Q H = \frac{(128)(10^3)}{0.75}$$

From which flow rate

$$Q = \frac{(128)(10^3)}{(0.75)(10^3)(9.81)(6)} = 2.9\,\text{m}^3/\text{s}$$

Also,

$$Q = \pi D_1 h C_{r1}$$

where h_1 is the height of runner
Therefore,

$$h_1 = \frac{2.9}{(\pi)(0.86)(4)} = 0.268\,\text{m}$$

Example 7

The runner of an axial flow turbine has mean diameter of 1.5 m, and works under the head of 35 m. The guide blades make an angle of 30° with direction of motion and outlet blade angle is 22°. Assuming axial discharge, calculate the speed and hydraulic efficiency of the turbine.

Solution:

Since this is an impulse turbine, assume coefficient of velocity = 0.98

Therefore the absolute velocity at inlet is

$$C_1 = 0.98\sqrt{2gH} = 0.98\sqrt{(2)(9.81)(35)} = 25.68\ \text{m/s}$$

The velocity of whirl at inlet

$$C_{w1} = C_1 \cos\alpha_1 = 25.68 \cos 30° = 22.24\ \text{m/s}$$

Since $U_1 = U_2 = U$

Using outlet velocity triangle

$$C_2 = U_2 \tan\beta_2 = U \tan\beta_2 = U \tan 22°$$

Hydraulic efficiency of turbine (neglecting losses)

$$\eta_h = \frac{C_{w1}U_1}{gH} = \frac{H - C_2^2/2g}{H}$$

$$\frac{22.24U}{g} = H - \frac{(U \tan 22°)^2}{2g}$$

or

$$\frac{22.24U}{g} + \frac{(U \tan 22)^2}{2g} = H$$

or

$$22.24U + 0.082U^2 - 9.81H = 0$$

or

$$0.082U^2 + 22.24U - 9.81H = 0$$

or

$$U = \frac{-22.24 \pm \sqrt{(22.24)^2 + (4)(0.082)(9.81)(35)}}{(2)(0.082)}$$

As U is positive,

$$U = \frac{-22.24 + \sqrt{494.62 + 112.62}}{0.164}$$

$$= \frac{-22.24 + 24.64}{0.164} = 14.63 \text{ m/s}$$

Now using relation

$$U = \frac{\pi DN}{60}$$

or

$$N = \frac{60U}{\pi D} = \frac{(60)(14.63)}{(\pi)(1.5)} = 186 \text{ rpm}$$

Hydraulic efficiency

$$\eta_h = \frac{C_{w1}U}{gH} = \frac{(22.24)(14.63)}{(9.81)(35)} = 0.948 \text{ or } 94.8\%$$

Example 8 An inward radial flow turbine develops 130 kW under a head of 5 m. The flow velocity is 4 m/s and the runner tangential velocity at inlet is 9.6 m/s. The runner rotates at 230 rpm while hydraulic losses accounting for 20% of the energy available. Calculate the inlet guide vane exit angle, the inlet angle to the runner vane, the runner diameter at the inlet, and the height of the runner at inlet. Assume radial discharge, and overall efficiency equal to 72%.

Solution:
Hydraulic efficiency is

$$\eta_h = \frac{\text{Power deleloped}}{\text{Power available}} = \frac{m(C_{w1}U_1 - C_{w2}U)}{\rho g Q H}$$

Since flow is radial at outlet, then $C_{w2} = 0$ and $m = \rho Q$, therefore

$$\eta_h = \frac{C_{w1}U_1}{gH}$$

$$0.80 = \frac{(C_{w1})(9.6)}{(9.81)(5)}$$

$$C_{w1} = \frac{(0.80)(9.81)(5)}{9.6} = 4.09 \text{ m/s}$$

Radial velocity $C_{r1} = 4$ m/s

$$\tan \alpha_1 = C_{r1}/C_{w1} \text{ (from velocity triangle)}$$

$$= \frac{4}{4.09} = 0.978$$

i.e., inlet guide vane angle $\alpha_1 = 44°21'$

$$\tan \beta_1 = \frac{C_{r1}}{(C_{w1} - U_1)}$$

$$= \frac{4}{(4.09 - 9.6)} = \frac{4}{-5.51} = -0.726$$

i.e., $\beta_1 = -35.98°$ or $180° - 35.98 = 144.02°$

Runner speed is

$$U_1 = \frac{\pi D_1 N}{60}$$

or

$$D_1 = \frac{60U_1}{\pi N} = \frac{(60)(9.6)}{(\pi)(230)}$$

$$D_1 = 0.797 \text{ m}$$

Overall efficiency

$$\eta_o = \frac{\text{Power output}}{\text{Power available}}$$

or

$$\rho g Q H = \frac{(130)(10^3)}{0.72}$$

or

$$Q = \frac{(130)(10^3)}{(0.72)(10^3)(9.81)(5)} = 3.68 \text{ m}^3/\text{s}$$

But

$$Q = \pi D_1 h_1 C_{r1} \text{(where } h_1 \text{ is the height of runner)}$$

Therefore,

$$h_1 = \frac{3.68}{(\pi)(0.797)(4)} = 0.367 \text{ m}$$