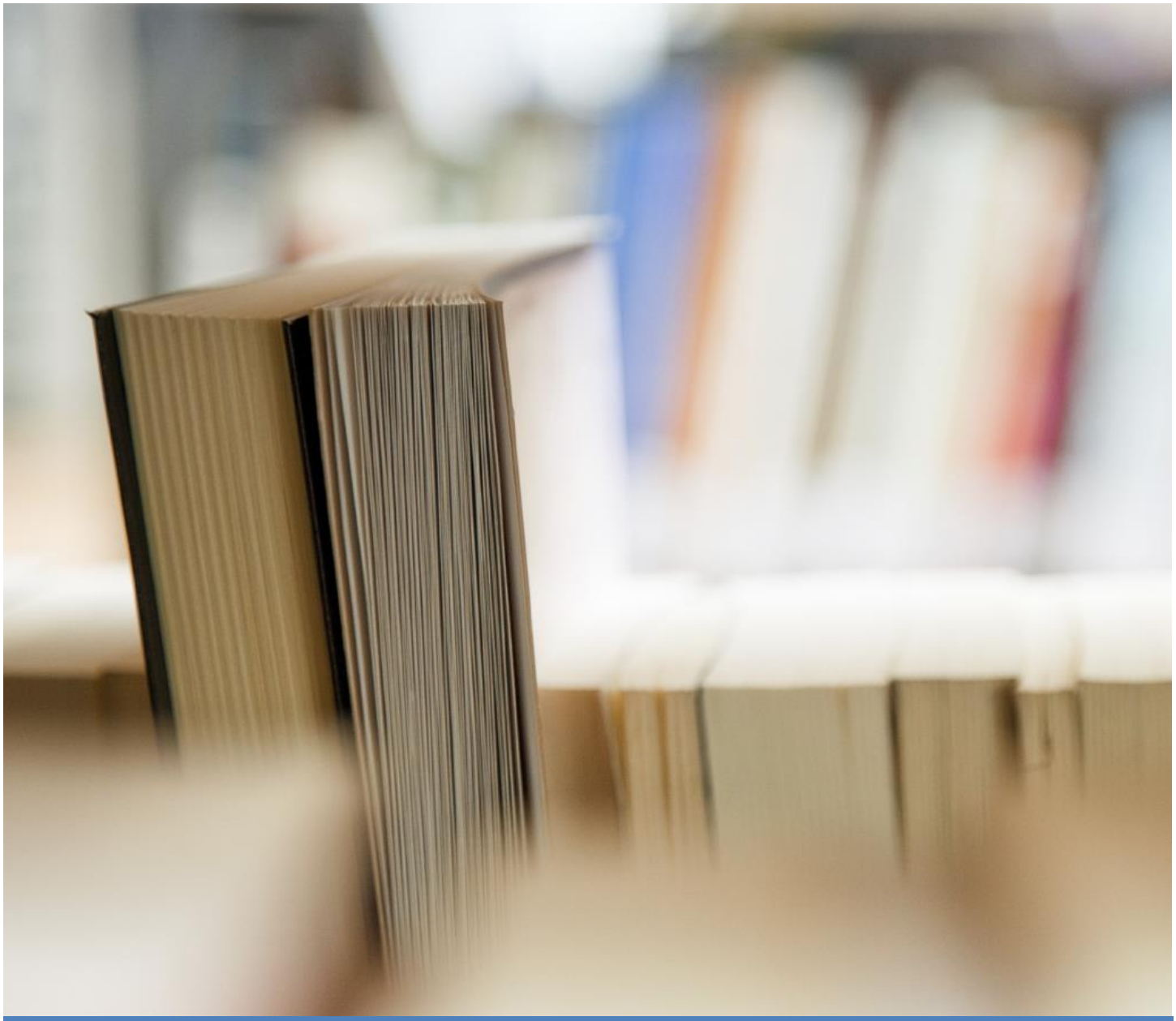

CIVIL LATEST MADEEASY HAND NOTES

6.BUILDING MATERIALS

ADMIN GATEIESMENTOR

Shop .Addres....NEAR MADE EASY ACE ENGINEERING ACADEMY
WESTEND MARGSAIDULAJAB ,SAKET METRO STATION GATE NO. 2 NEW DELHI
110030 MOB.NO.8588058174,8588056019

HAND WRITTEN NOTS

ESE,GATE,PSU

MADE EASY :-

NAME.....

SUBJECT.....BULDING..MATERAIL.....

INSTITUTE.....90.....

Building Materials.

Rectla

1) Cement
2) Lime – Non hydraulic.
3) Mortar
4) Aggregates
5) Concrete
6) Timber → organic (affected by mo)
7) Brick & Stones
8) Miscellaneous.

cement particles have high affinity towards water as compared to sand, so for less absorption of water sand is mixed and shrinkage also reduced.

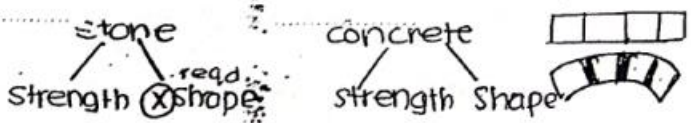

Brick & Stones = Building blocks

Cement

It is a binding material most widely used, it is primarily a hydraulic binding material. Some types of cements are non hydraulic also (exa. Plaster of Paris (POP)).

Hydraulic Cement

Ordinary Portland cement (OPC) is first hydraulic cement invented by Joseph Aspidin in UK

[In UK – Portland – stone looks like OPC after set].

OPC have ability to set under water that's why it is hydraulic cement.

cement is made using following raw ingredients :-

Ingredient

- Calcareous Material — exa – limestone, chalk etc
- Argillaceous material — exa – clay, Marl etc.

For OPC, these raw constituents should have following basic ingredients :

[cement → silica based cement]

Basic Ingredient	%	Optimum content	Excess amount	Less amount	Comment
Lime (CaO)	62-67 %.	It gives strength & soundness.	unsoundness, cracking	Less strength Quick setting (Lime acts as retarder)	Soundness → Ability to resist volume change lime (Hardened state) (lime in excess reacts with H_2O A result in crack)
Silica (SiO_2)	17-25%	strength	Setting retarded No-unsoundness	Quick setting	
Alumina (Al_2O_3)	3-8%	setting action (Quick setting)	Lowers the strength & Quality	slows setting	Al_2O_3 act as a flux & it lowers clinkering temperature
Iron Oxide (Fe_2O_3)	3-5%	strength, Hardness Reddish brown tint	–	By less amount, white cement can be manufacture	Helps in fusing of lime and silica
Magnesia (MgO)	1-3%	some strength & yellowish tint	unsoundness	–	$MgO + H_2O \Rightarrow Mg(OH)_2$ volume ↑
Sulphur (SO_3)	<3%	–	Unsoundness Sulphur Attack	–	–
Alkalies (Na_2O, K_2O)	<1%	–	staining & efflorescence	–	–

sulphure attack (vol change) is only dangerous in solid state not in liquid state.

NOTE

① If alkali is present in cement in excess amount it leache on finished surface & formation of white patches (stains) takes place. This phenomenon is known as efflorescence

② Sulphur Attack ⇒

It can be internal or external, in this process sulphur reacts with lime & alumina compound and formation of complex compounds takes place. These complex compound have greater volume which causes unsoundness in solid structure. This is known as sulphur attack.

Gypsum ($CaSO_4 \cdot 2H_2O$) – [3-5%]

It is added in cement to retard the setting process, It retard the setting process by making preventive layer around alumina compound.

cement + Gypsum → Alumina + Gypsum → [Calcium Sulpho Aluminate]
↓
In liquid state.
↓
sulphur attack (Not dangerous)

Al.

- In manufacturing of cement, the raw constituents are mixed in suitable proportion and they are burnt in rotary kiln at the temp. of around 1400-1600°C. and the formation of clinkers takes place (clinkers ⇒ 5-25mm balls)
- These clinkers are grinded to make the cement. At the time of grinding, gypsum is added.
- After burning, formation of diffⁿ complex compounds

Silica – less affinity towards H_2O
Alumina – more – " ——— " ———

[rate of heat is diffn – depends on rate of reacn
amount of heat is constant.]

— C_3S & C_2S forms CSH gel & hence responsible for strength

takes place. These compounds are identified by R.H. Bogue, thats why these are also known as Bogue's compounds

- Major Bogue's compounds are as follows :-

Compound		% can be varied by changing kiln temp.	
① Tricalcium Silicate (C_3S)	$3CaO \cdot SiO_2$ (Aelite)	45-65%	28 day strength (Initial strength)
② Dicalcium Silicate (C_2S)	$2CaO \cdot SiO_2$ (Belite)	20-40%	final strength (ultimate)
③ Tri-calcium aluminate (C_3A)	$3CaO \cdot Al_2O_3$ (Celite)	4-14%	Initial setting
④ Tetra calcium alumino ferrite (C_4AF)	$4CaO \cdot Al_2O_3 \cdot Fe_2O_3$ (Felite)	8-15%	

① C_3S ⇒ It hydrates within a week or so, it is main component which is having best cementing action. It is responsible for early strength. In the constructions where early strength is reqd the proportion of C_3S is increased in those cement
exa- pavement construction, precast construction, speedy construction, cold weather construction etc.

NOTE Frost Action-
In cold weather there is a problem of frost action (freezing & thawing) due to which development of crack takes melting place which can be avoided by early strength.

[C_3S has more heat of hydration per gm]

- Although C_3S have high early strength but its proportion is lowered at the places where shrinkage cracks are not allowed. (exa- hydraulic structures) water tank

$C_3S + H_2O \longrightarrow$ C-S-H gel + $Ca(OH)_2$ + (Heat of Hydration more)

- The particle of C_3S are smallest in size among bogue's compound.

[lect 16]

② C_2S ⇒

- These compounds hydrates within a year or so, hence they are responsible for progressive strength. In the constructions where progressive strength is required, the proportion of C_2S is increased
  exa- Hydraulic structure construction,
  Dam construction, mass concreting etc.
- Another advantage of C_2S is, it is having least heat of hydration, hence chances of crack development is less which results in increase in resistance against the action of chemical & salt
  [cracks only affects the durability (seepage)]

{IF C_3S↑ – Temp↑ – cracks developed
C_2S↑, C_3S↓ – no cracks – rate of gain of strength↓}

C_3A → Chance of sulphur attack
C_4AF → No chance of sulphur attack

③ C_3A ⇒

- It hydrates within 24 hr, it is responsible for flash setting in the cement.
- High amount of C_3A is not desirable bec2 it is having maximum heat of hydration which causes shrinkage & development of cracks.
- C_3A is also responsible for chemical attack like sulphur attack.

NOTE

Flash Setting

- It occurs due to high amount of C_3A & less amount of gypsum. After flash setting remixing not possible
- It cannot be removed

False setting

- It occurs due to presence of unhydrous gypsum & hydrous gypsum in the cement.
- By adding extra water, for rehydration of gypsum remixing can be done
- It can be removed by remixing

[Unhydrous Gypsum ⇒ $CaSO_4$ ($2H_2O$) less or zero.]

Hydrated Gypsum → Kiln (Hydroevaporation) → Unhydrous gypsum in cement → During mixing it first react with H_2O shows false setting

④ C_4AF ⇒

- It also hydrates within 24 Hr. It is least significant compound among bogue's compound. The strength contribution is least among all & it does not affect the property of cement significantly But it is having little less chance of sulphur attack as compared to C_3A.

NOTE:-

① Order of Heat of Hydration based on **amount** ⇒

$$C_3A > C_3S > C_4AF > C_2S$$

Compounds	Rate of hydration (After 90 days) cal/gm
C_3A	300
C_3S	105-110
C_4AF	100
C_2S	40-60

② Order of Heat of Hydration based on **rate of hydration**

$$C_4AF \gtrapprox C_3A > C_3S > C_2S$$

③ Contribution in strength



$$C_3S > C_2S > C_3A > C_4AF$$

④ Total heat of hydration of cement can be calculated as follows:

Total heat of cement

$$H = aA + bB + cC + dD$$

a → proportion of compound

A → amount of Heat of Hydration associated with compound (cal/gm)

For OPC, it is around **90-100 cal/gm** after 28 days

(5) Amount of water -

- The amount of water needed by C_3S for complete hydration is around 24% by weight, for C_2S it is around 21% by weight. For cement as a whole, it is around 23% by weight
- Practically the water added in the cement will be greater than 23% because some water will be interrupted in voids, capillary, interlayer spaces etc. Hence the addition of water should be more. Generally 15% extra water is added, Then total amount becomes approximately 38%.

Cement small particle → more water required → shrinkage is more.

large particle → less water

- The amount of free (extra) water in cement paste will be responsible for shrinkage.

[Free water — capillary water, interlayer water, adsorbed water.]

$$C_3S + H_2O \longrightarrow C\text{-}S\text{-}H \text{ gel} + Ca(OH)_2 + \text{Heat}$$

$Ca(OH)_2$ increase the pH of concrete (basic in nature) coated over r/f and make it safe against corrosion.

If pozzolana is added

$$\text{Pozzolane (Si)} + Ca(OH)_2 + H_2O \xrightarrow{\text{slow reaction}} C\text{-}S\text{-}H \text{ gel}$$

but less binding property than gel formed by C_3S.

pozzolana ↑ – C_3S ↓ – crack ↓ – durability ↑

- During hydration, calcium hydroxide $Ca(OH)_2$ is a by-product which helps in increasing the pH of cement paste but it also have some disadvantage
  (i) it leach out from the structure & make the concrete porous.
  (ii) It also increases the chance of sulphur attack hence $Ca(OH)_2$ should not be in large amount, it is utilized by pozzolanic material to make C-S-H gel in pozzolanic cement.

*Manufacturing of cement

The basic processes involved in manufacturing of cemen are mixing, burning and grinding.
Mixing can be done in dry condition or in wet condition hence two methods are there-

1) Dry method
2) wet method

① Dry Method - (New method) -

→

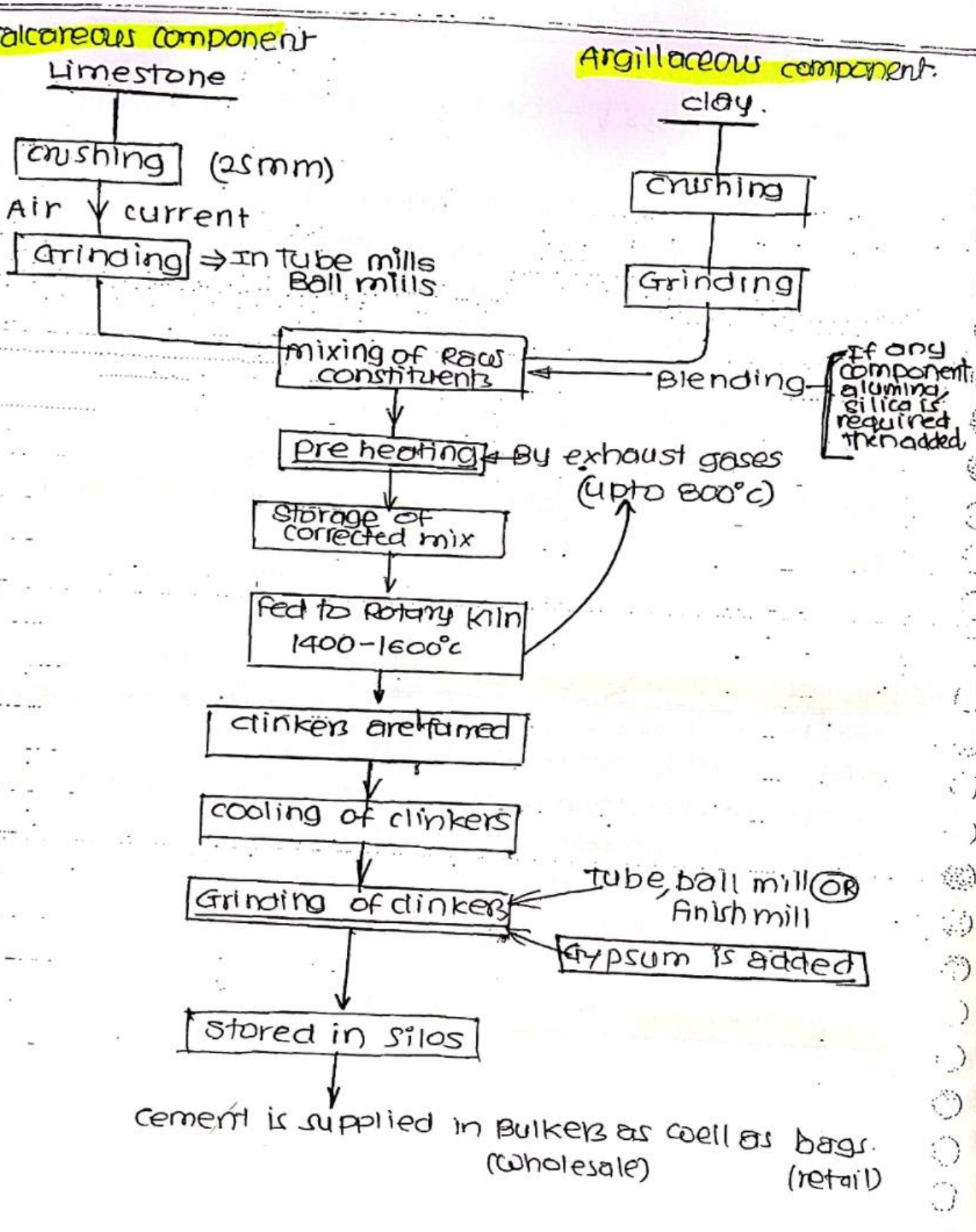
Calcareous component
Limestone
Crushing (25mm)
Air current
Grinding ⇒ In tube mills Ball mills
Argillaceous component.
clay.
Crushing
Grinding
Mixing of raw constituents
Blending
If any component alumina, silica is required then added
Pre heating ← By exhaust gases (upto 800°C)
Storage of corrected mix
Fed to Rotary Kiln 1400-1600°C
clinkers are formed
cooling of clinkers
Grinding of clinkers
Tube, ball mill (OR) finish mill
Gypsum is added
Stored in silos
Cement is supplied in Bulkers as well as bags.
(Wholesale)
(retail)

similar to slow sand filter

advantage: mixing is proper → dis.: rotary kiln is large.

② Wet Method ⇒ (old method)

Calcareous comp. limestone

Argillaceous comp. clay

crushing (25mm)

crushing + water is added

storage basins

storage basins

Formation of Raw slurry

In wet Grinding

Blending

30-40% water content

storage of corrected slurry.

fed to rotary kiln. (1400-1600°C)

clinkers are formed

cooling of clinkers.

Grinding of clinkers ← Gypsum is added.

stored in silos.

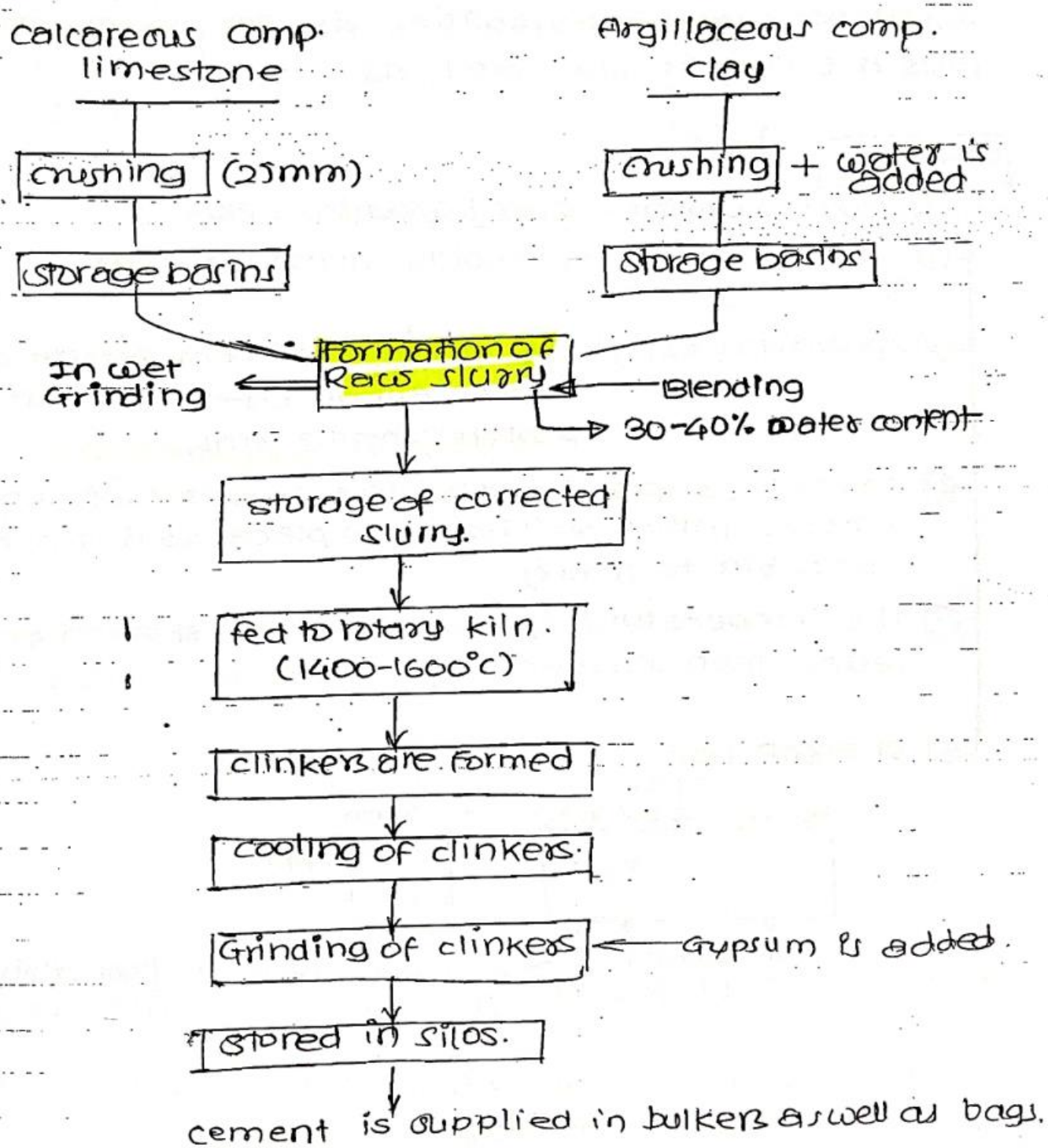

cement is supplied in bulkers as well as bags.

Want FULL MADEEASY-2019-20 CIVIL BESTQUALITY LATEST HANDWRITING NOTES CLICK HERE



Noted-: Above CIVIL MADEEASY 2019 BATCH CLASSROOM BEST QUALITY Handwriting Notes Unique and Good Handwriting, No Need other academy Handwriting Notes. Above Notes Enough for your Preparation.....

Noted-: Single Source Follow, Revise

Multiple Time Best key of Success

Email-gateiesinfo2civil@gmail.com

Testing of cement

Before using cement for any construction it must be tested to check the qualities as per Indian standard. Tests are further classified as —

Field Test

1. Colour ⇒ uniform Grey + Greenish shade
2. Fineness (OR) Smoothness ⇒ By rubbing in bet^n fingers.
3. Sp. Gravity Test ⇒ By throwing cement sample over bucket full of water, cement particle should sink.
4. cement sample should be free from air-set lumps (means initial reaction has take place, so it is not possible to remix).
5. The temperature of mass of cement should be lesser than surrounding.
6. Strength Test

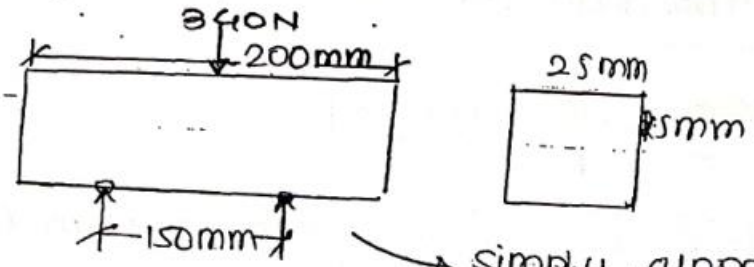

→ simply supported (not overhang) (performed for lower strength cement)
In 7 days, strength determined.

Mass Sp. gr. = 1.5

No of cement bag = $\frac{1.5 \times 1000}{50} = 30$

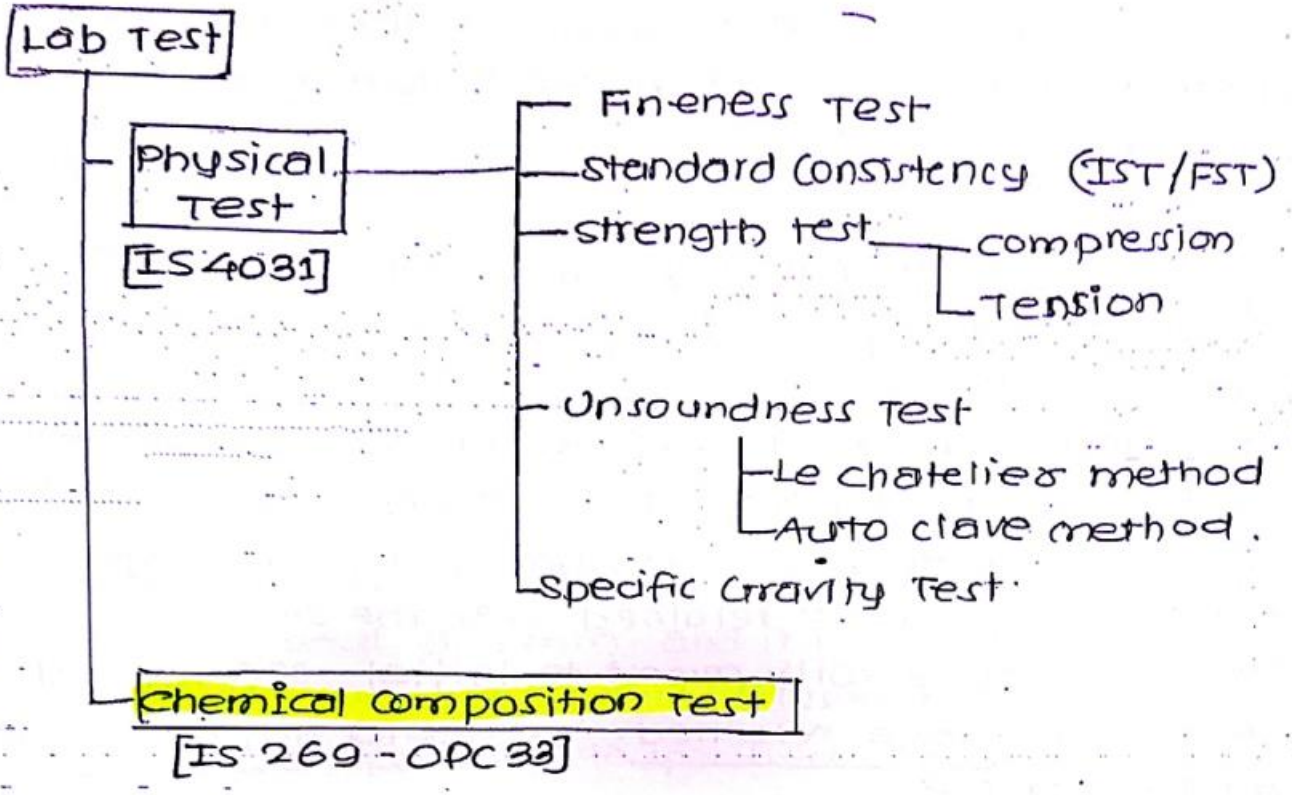

Lab Test

Physical Test ⇒

① Fineness Test

100 gm → ○○○ → less rate.

100 gm → ○○○○○ → (rate of H.OH) more → gives early strength

amount of H.OH same

Temp ↑

SA is more → reaction will be faster.

- Fineness of cement affects the quality of cement in following manner

① As the fineness increases, hydration process become faster, hence rate of gain of strength increases, At the same time setting become quick.

② Due to increase in fineness rate of heat evolution also increases which may leads to cracking.

③ Finer cement have more adsorption site then water adsorb will be more, when water will evaporate. shrinkage takes place

— Fineness of cement can be determined by any of the foll^n methods :

① Sieve Analysis

In this method about 100gm of cement sample is placed over IS sieve No. 9 (90μ) and shaking is done for at least 15 min along with breaking of air set lumps. The weight of residue retained over the sieve is expressed in %age with respect to initial weight, that is known as %age retained. It should not be greater than 10% for opc.

	% Retained.
OPC	<10%
Rapid Hardening Cement	5%

② Air Permeability Test

— In this method, fineness is calculated in terms of specific surface Area (SSA - surface area per unit weight) It is determined using Nurse & Blaine's air permeability apparatus in which air is pass through the bed of cement and head loss in air is measured.

— As we know head loss will be proportional to the fineness of the cement. Hence by knowing head loss, specific SA can be calculated using calibrated chart or empirical formula given in IS code.

— For OPC, SSA should not be less than 2250 cm^2/gm
For RHC, SSA should not be less than 3250 cm^2/gm

~~In field, water content~~ (w.c ratio) > consistency (w.c) → only to perform cement tests.

② Standard consistency Test (Trial & error method)

- It is the parameter which is defined to perform the different laboratory test related to cement like IST, FST, strength test and soundness test.
- It is defined as the moisture content for which the Vicat's plunger can penetrate in cement paste upto 33-35 mm from top (5 to 7 mm from bottom)
- It is denoted by 'p'
- To perform this test, a cement paste is prepared starting from around 25% moisture content by gauging (mixing it for at least 3-5 min. and it is filled inside the vicat mould. 10 mm dia. plunger is lowered gently and moistur content corresponding to specified penetration is called a standard consistency.

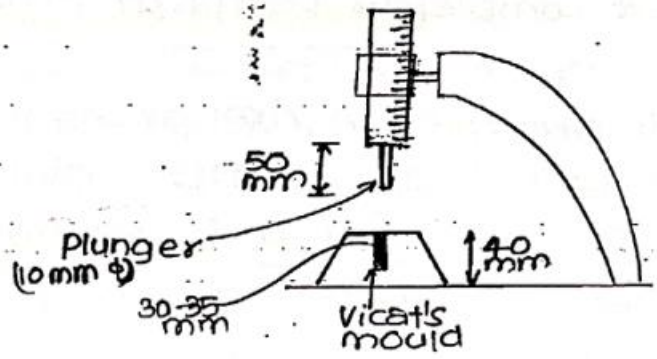

Vicat's Apparatus.

Setting Time of Cement

By knowing the setting time of cement, we can check any deterioration (degredation) in quality of cement by storage bec? setting time will change with condition of storage.

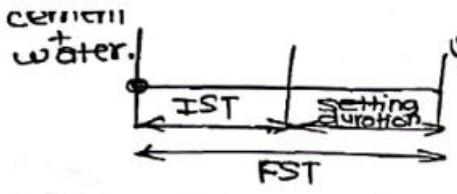

For Ideal condn
- Setting duration should be less.
- IST more

Initial setting time of cement ⇒

- It is the time duration measured from the instant when water is added upto the time when paste starts loosing its plasticity (setting started).
- It is determined by making cement paste with moisture content [0.85P] and this paste is filled inside vicat's mould, 1mm square needle is gently inserted in the paste to measure IST.
- IST will be the duration when this needle is not able to penetrate more than 33-35 mm
- For OPC IST ≠ 30 min

Final setting time ⇒

- It is the time duration from the instant water is added upto the time when paste completely looses its plasticity (setting completed.)
- To measure this, paste is prepared in similar manner as in case of IST and time is noted upto the instant when 5mm dia annular collar (ring) is not able to make any impression over the surface of cement.
- For OPC FST ≯ 10 hrs.

③ Strength test

Compressive strength Test –

- To calculate the compressive strength of cement a mortar is prepared in the ratio of [1:3] by using standard sand (Ennore sand - std. sand)
- this paste is filled inside the mould in generally 2 layers to make cubes of 7.06 cm. After moulding

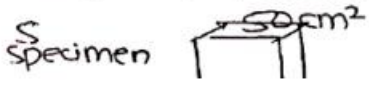

it is placed at room temp. After 24 hrs, demoulding is done & it is placed inside curing tank.

—The water content taken for preparation of mortar is $[\frac{P}{4}+3]\%$ of combined weight (cement+sand)

After sufficient days of curing (7 days & 28 days), the specimen is subjected to gradual compressive load usin CTM (compressive testing machine) or UTM. and maxm compressive strength corresponding to failure is determine which is known as compressive strength of cement

— OPC (33) means Minm compressive strength after 28 days (33 M

— 7 days strength = $\frac{2}{3}$ of (28 days strength) (22 mPa)

— 3 days strength = $\frac{1}{2}$ (28 days strength) (16.5 mPa).

Tensile strength test ⇒

—To calculate tensile strength of cement, mortar is prepared in similar manner as in case of compression testing

—For tensile test, special moulds are used known as **Briquettes**. These briquettes are tested using briquette testing machine after sufficient days of curing

—The maxm tensile stress is calculated corresponding to failure.

$$\left\{\text{Tensile strength} = \frac{\text{Tensile load}}{6.45\ cm^2}\right\}$$

No. of specimen = 12.

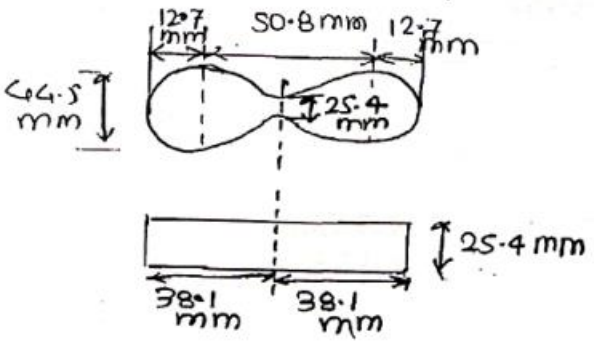

-(Briquettes)

④ Soundness Test (Measurement of unsoundness) ⇒

- Due to presence of free lime, magnesia in excess amount and sulphur in cement, there may be expansion inside the body of Hardened cement paste. which may leads to the cracking. This is known as unsoundness
- Unsoundness due to sulphur is not measured directly

1) Le-chatelier's Method ⇒

- This method is used to determine unsoundness due to lime
- To perform this test, a paste is prepared using 0.78P amount of water and this paste is filled inside the split cylinder. This cylinder is covered by glass plate at top and bottom and this whole assembly is immersed in water tank for 24 hrs at the temp. of 27°C–32°C. After 24 hrs, the spacing betn indicator arms is recorded as 'X'.

($CaO + H_2O$ & $Ca(OH)_2$ large volume expansion)

- Again this assembly is kept in water and temp. of water is increased upto boiling point in 30 min and it is maintained for next 3 hrs and again the spacing betn indicator arm is noted as 'Y'.
- The difference of Y & X should not be greater than 10mm for OPC.

