UNIT 3

ALPHABET OF LINES

Total Period: 1

Unit Outcomes

At the end of this unit, students should be able to:

- ✓ understand the types of lines according to their purpose, weight and thickness in drawing;
- ✓ Apply alphabet of lines for making proper working drawings.

Unit Overview

The Alphabet of lines is nothing but the different types of lines. In order to include all the necessary information on a drawing in a meaningful manner, different types and weights of lines are used to represent the features of the object. The meaning of a line with certain characteristics has been standardized, and will be the same on any drawing. These line conventions must be understood in order to read drawings.

Lesson 3.1 *Alphabet of lines.*

Number of Period: 1

Learning Competencies

At the end of this lesson, students should be able to:

- Identify and list the type of alphabet of lines.
- explain the purpose and weight of alphabet of lines.
- perform alphabet of lines in their weight and thickness.
- use alphabet of lines on proper drawings.

Planning ahead

You are about to educate students on eleven main types of line, you should therefore be able to do the following:

- Prepare diagram of alphabet of lines as a teaching aid.
- Collect architectural drawing, machine drawing and map drawing for display and students will learn the application of lines.
- Program to practice to draw the lines with various line weights on their exercise book and even on a black/white board.

Hints for Teaching

You can make your teaching interesting by using teaching aids like blueprint reading exercises. Alphabet of Lines such as Object Lines, Hidden Lines and Center Lines, and Extension Lines and Dimension Lines.

Discussion

1. Ask students the types of line they observed any type of blueprint like a building or a machine drawing.
2. Discuss and demonstrate by drawing the alphabet of lines used in technical drawing on black board. Have students take notes from the list.
3. Allow students to practice by drawing alphabet of lines with appropriate line weight and to do activity 3.1.

Teaching Note

Line weight is the thickness of the line. **Construction lines** and **guide lines** are very light, easily erased lines used to block in the main layout. **Visible lines** are the edges or "outlines" of an object. They are drawn as solid lines with a thick/heavy weight. All other lines contrast with the visible lines by having either a thinner weight and/or a combination of dashes.

Lesson Guide

Period	Lesson title	Starter activity	Main activities	Concluding activity
1	3.1 Alphabet of lines	• Ask brain storming question and discuss by listing the types of lines with their proper line weight.	• Give activity 3.1 to do in group from architectural drawings or machine drawings. • Illustrate and Discuss various applications of each type of line with students. • Assist students to draw different types of lines	• Students give feedback about today's lessons. (Teacher acts as facilitator.) • Give home work to do exercises from the textbook

Evaluation

Instructs you student to:

- define and draw each type of line.
- state the application of each line.
- Identify the name of alphabet of lines from the given drawing.

Method

- Presentation,
- Demonstration
- Individual practice

Assessments

The teacher should follow and assess each student's work continuously over the whole activity of the lesson and compare it with the following description to determine whether the student has achieved the minimum required level.

Students working below the minimum requirement level will require extra help if they are to catch up with the rest of the class. They should be given extra attention in class and additional activities at the end of the lesson or during breaks.

Students working above the minimum requirement level should be praised and their achievements recognized. They should be encouraged to continue working hard and not become complacent.

Quiz

Label each line type in the drawing below within the guidelines.

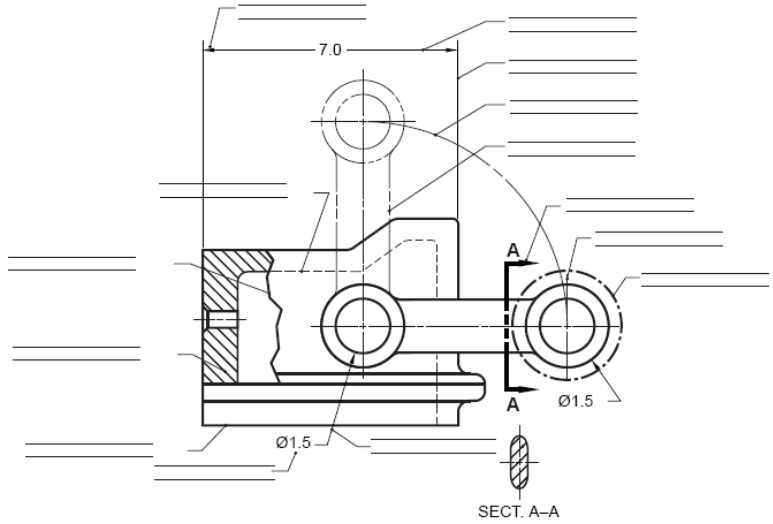

Answer to the Quiz

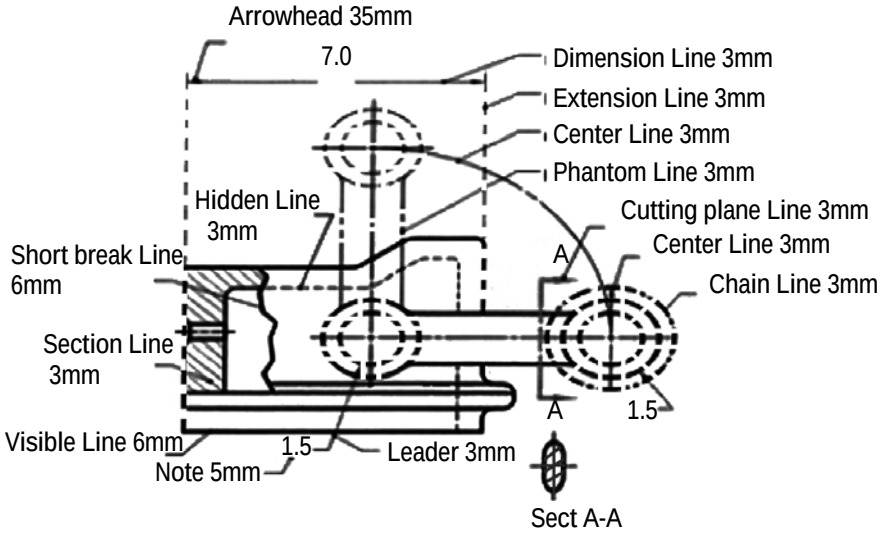

Answer for the question on the textbook exercise 3.1

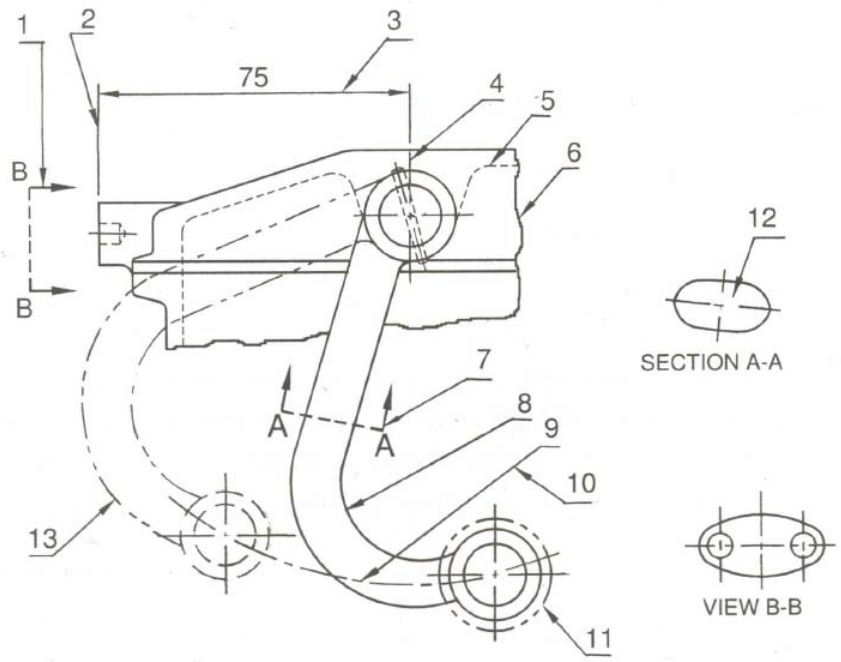

1. cutting plane line
2. extension line
3. dimension line
4. center line
5. hidden line
6. short break line
7. cutting plane line
8. visible line
9. center line
10. leader line
11. phantom line
12. center line
13. phantom line