CHAPTER 5
INTRODUCTION TO BRIDGE DESIGN

- **Introduction**
- A Bridge is a structure carrying a road, path, railway, etc across a river, road, or other obstacle.
- A Bridge shall be defined as any structure which displays a definite superstructure (i.e. deck and girders) and substructures (i.e abutments, piers and foundations) erected over a depression , watercourse, railway line, road or other obstacle for carrying motor, railway, pedestrian or other traffic.

- Designs of bridges vary depending on the function of the bridge ,the nature of the terrain where the bridge is constructed and anchored , the material used to make it, and the funds available to build it.
- Most likely the earliest bridges were fallen trees and stepping stones, while Neolithic people built board walk bridges across marshland.
- Arkadiko bridge is a one of the oldest 22m long corbel arch bridge constructed in 13th century BC in Peloponnese, southern Greece still in existence and use.



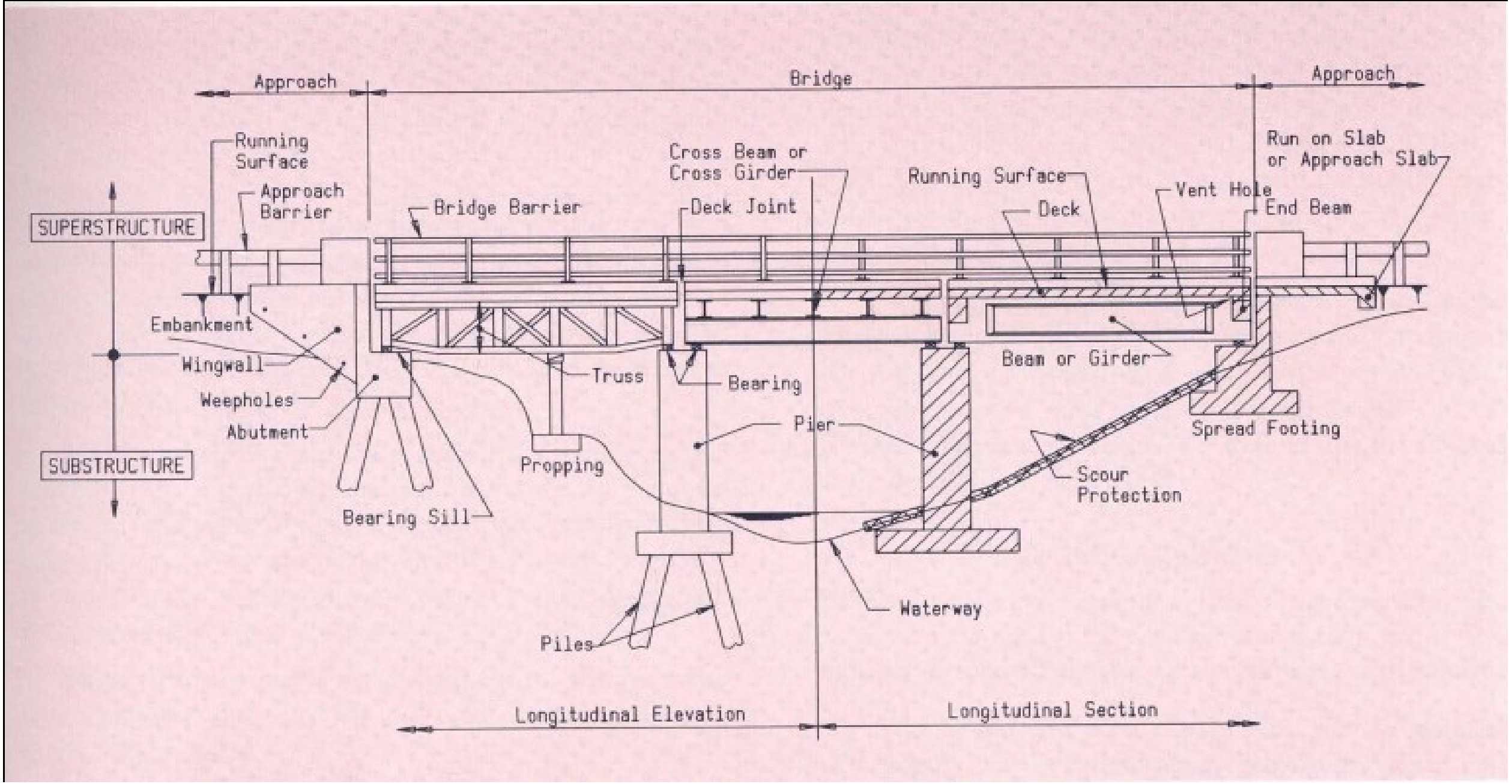
Approach
Bridge
Approach
Running Surface
Approach Barrier
Bridge Barrier
Cross Beam or Cross Girder
Deck Joint
Running Surface
Deck
Vent Hole
End Beam
Run on Slab or Approach Slab
SUPERSTRUCTURE
Embankment
Wingwall
Weepholes
Abutment
Truss
Bearing
Pier
Beam or Girder
Spread Footing
SUBSTRUCTURE
Propping
Scour Protection
Bearing Sill
Waterway
Piles
Longitudinal Elevation
Longitudinal Section

Choice of bridge site

Attention, commensurate with the risk involved, shall be directed toward providing for favorable bridge locations that:

- Fit the conditions created by the obstacle being crossed
- Facilitate practical cost effective design, construction, operation, inspection and maintenance
- Provide for the desires level of traffic service and safety
- Minimize adverse highway impacts.

ECONOMIC CONSIDERATIONS TO BE MADE FOR BRIDGE DESIGN

- Structural types, span lengths, and materials shall be selected with due consideration of projected cost.
- The cost of future expenditures during the projected service life of the bridge should be considered. Regional factors, such as availability of material, fabrication, location, shipping, and erection constraints, shall be considered.

SAFETYREQUIREMENTS

- Consideration shall be given to safe passage of vehicles on or under a bridge. The hazard to errant vehicles within the clear zone should be minimized by locating obstacles at a safe distance from the travel lanes.

The minimum dimensions listed in the following table shall be used in bridge design and construction.

	Dimension
Footing depth	≥ 0.25 m
Stem and Head wall/ballast wall of abutment thickness	≥ 0.25 m
Bearing shelf of abutment or pier	≥ 0.40 m
Wingwall thickness	≥ 0.20 m
Pier columns in water, thickness	≥ 0.50 m
Pier walls thickness	≥ 0.30 m
Concrete deck depth, excluding any provision for grinding and sacrificial surface	≥ 175 mm
Concrete deck for pedestrians bridge	≥ 150 mm

Bridge width

All dimensions are valid regardless of the length of the bridge, due to safety reasons.

For pedestrian overpasses, the minimum width is 3.0 m, which can accommodate three pedestrians, or a bicycle and a pedestrian in width.

Application	Width (m)
Two-lane in “urban” area	10.30
Two-lane in “rural” area	7.30
Single Lane	4.20
Pedestrian Overpass	3.0

4.5 Selection of Bridge Type

- One of the key submittals in the design process is the engineer’s report to the owner of the type, size and location of the proposed bridge

3.2.1 Factors to be considered in Selection

- Selection of bridge type is related to economy, safety and aesthetics

Factors in Bridge Type Selection

a) Geometric Conditions of the Site

- The type of bridge selected will often depend on:
  - the horizontal and vertical alignment of the highway route
  - the clearances above and below the roadway
- on a curve, continuous box girder and slab bridges are good choices:
  - they have a pleasing appearance
  - they can readily be built on a curve, and
  - have a relatively high torsional resistance

Factors in Bridge Type Selection

b)Subsurface Conditions of the Site

- If settlement is a problem, the bridge type selected must be able to accommodate this
- rigid frame bridge requires strong foundation material

C) Functional Requirements

- The bridge must function to carry not only present but also future volumes of traffic. There can be possibility of widening
  - Slab and T-girder can be widened
  - Box-girder is difficult to widen

d) Aesthetics

- the bridge designer should strive to obtain a positive aesthetic response from the public to the bridge type selected

Factors in Bridge Type Selection

e) Economics and Ease of Maintenance

- A general rule is that a bridge with the minimum number of spans, fewest deck joints, and widest spacing of girders will be the most economical
- Generally concrete structures require less maintenance than steel structures

f) Legal Considerations

- The requirements of environmental laws and other applicable laws must be met

Factors in Bridge Type Selection

- Once a preliminary span length has been chosen, comparative studies are conducted to find the bridge type best suited to the site

a) Small Span Bridges

- **Culverts** <6m, RC, steel. Structural form:pipe, pipe arch, rigid box or slab box culverts
- **Slab bridge** about 6-12m span.
- **T-girder bridges** 10-20m span.
- ***Rolled steel Girder Bridges***: are simple to design and construct. They can be economical up to 30m

Factors in Bridge Type Selection

b) Medium Span Bridges (up to 50m)

- ***Cast in situ and Precast Concrete Box Girder***
- ***Composite Rolled Steel Girder***
- ***Composite Steel Plate Girder Bridges***
- ***Cast in Place post Tensioned Concrete Box Girder*** Bridges
- ***Composite Steel Box Girder Bridges***

Factors in Bridge Type Selection

c) Large Span Bridges (50-150m)

- composite steel plate girder
- cast in place post tensioned concrete box girder
- post tensioned concrete segmental bridges
- concrete and steel arch bridges, and
- steel truss bridges





BRIDGE LOADING

- Bridges serve their function under different loads
- Any of the limit states should not be exceeded under the most unfavorable load combinations
- First loads on superstructure and substructure will be treated
- Then load factors and load

Types of Loads

- Broadly classified into 2: permanent and transient loads
- These loads are considered for design and structural evaluation of existing bridges

Different Standards for Bridge Loading

- American Association of State Highway and Transportation Officials (AASHTO)
- DIN Standard (in Germany)
- BS 5400 (British Standard)
- Indian Roads Congress (IRC) Bridge Code

5.4 AASHTO 2005 Load Specifications

5.4.1 Dead Loads: DC, DW and EV (Art. 3.5)

- Weight of components of the structure, appurtenances, utilities, earth cover, wearing surface, future overlays and planned widening
- These loads obtained from dimensions and unit weights (Table 4.1)

- Permanent Loads
  - DC = dead load of structural components and nonstructural attachments
  - DD = downdrag
  - DW = dead load of wearing surfaces and utilities
  - EH = horizontal earth pressure load
  - EL = accumulated locked-in effects resulting from the construction process
  - ES = earth surcharge load
  - EV = vertical pressure from dead load of earth fill

- Transient Loads
  - BR = vehicular braking force
  - CE = vehicular centrifugal force
  - CR = creep
  - CT = vehicular collision force
  - EQ = earthquake
  - FR = friction
  - IM = vehicular dynamic load allowance
  - LL = vehicular live load
  - LS = live load surcharge
  - PL = pedestrian live load
  - SE = settlement
  - SH = shrinkage
  - TG = temperature gradient
  - TU = uniform temperature
  - WA = water load and stream pressure
  - WL = wind on live load
  - WS = wind load on structure

5.4 AASHTO 2005 Load Specifications

Densities.

Material		Density (kg/m^3)
Aluminum Alloys		2800
Bituminous Wearing Surfaces		2250
Cast Iron		7200
Cinder Filling		960
Compacted Sand, Silt, or Clay		1925
Concrete	Low-density	1775
	Sand-low-density	1925
	Normal Density with $f'_c \leq 35$ MPa	2320
	Normal Density with $35 < f'_c \leq 105$ MPa	$2240 + 2.29\, f'_c$
Loose Sand, Silt, or Gravel		1600
Soft Clay		1600
Rolled Gravel, Macadam, or Ballast		2250
Steel		7850
Stone Masonry		2725
Wood	Hard	960
	Soft	800
Water	Fresh	1000
	Salt	1025
Item		Mass per Unit Length (kg/mm)
Transit Rails, Ties, and Fastening per Track		0.30

5.4.2 Live Loads

a) ***Vehicular Live Loads***

- ***Design truck or design tandem and***
- ***Design lane load***

(Art. 3.6.1.2)

5.4.2 Live Loads

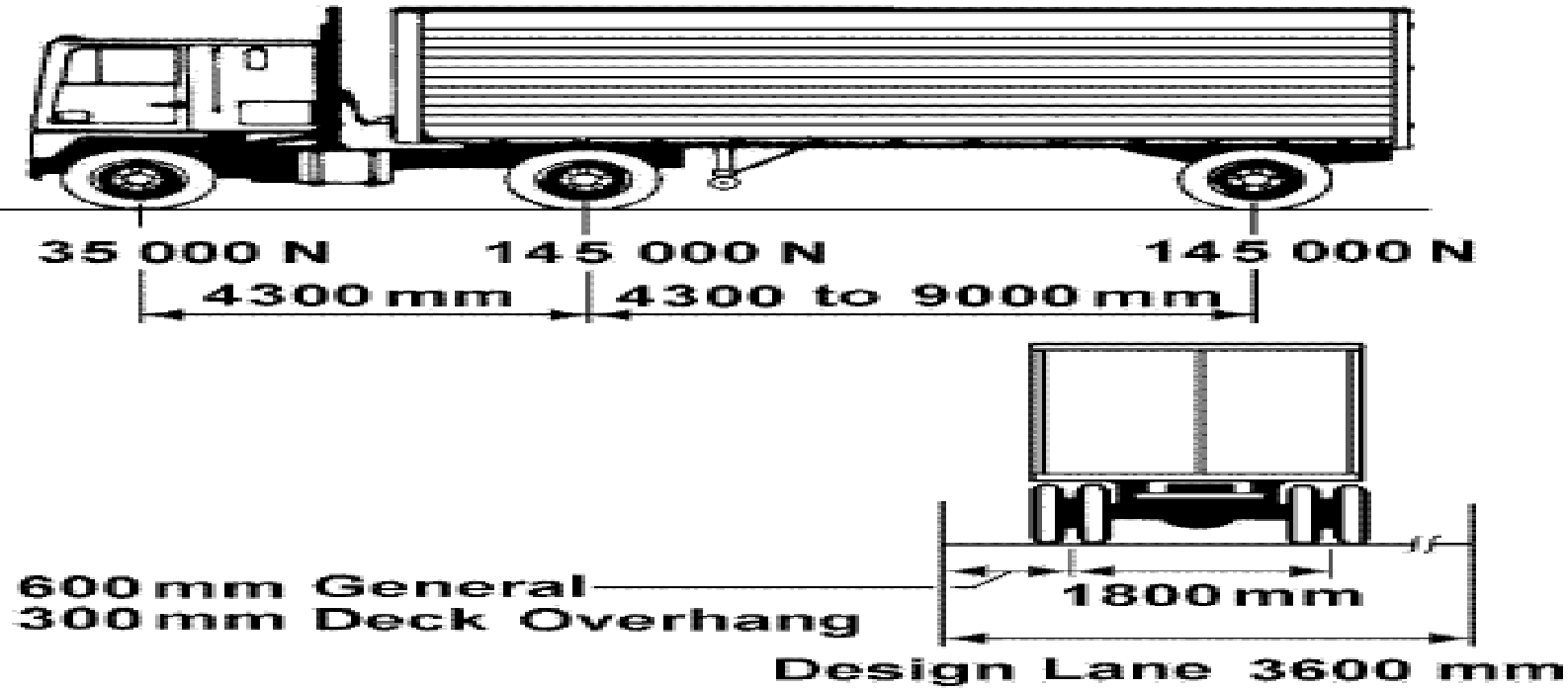

Characteristics of the Design Truck.

Live Loads Contd. . .

b) Pedestrian Live Loads: 3.6kPa for side walk>0.6m

c) Multiple Presence of Live

d) Dynamic Load Allowance: IM(3.6.2)

Table 3.6.1.1.2-1 Multiple Presence Factors *m*.

Number of Loaded Lanes	Multiple Presence Factors *m*
1	1.20
2	1.00
3	0.85
>3	0.65

Dynamic Load Allowance, *IM*.

Component	*IM*
Deck Joints—All Limit States	75%
All Other Components • Fatigue and Fracture Limit State	15%
• All Other Limit States	33%

$$IM = 33(1.0 - 4.1\times10^{-4} D_E) \geq 0\%$$

Live Loads Contd . . .

e) Centrifugal Force:CE (Ar

$$C = f\frac{v^2}{gR}$$

f = 4/3 for load combinations other than fatigue and 1.0 for fatigue

f) Braking Force: BR (Art. 3.6.4)

The braking force shall be taken as the greater of:

- 25 percent of the axle weights of the design truck or design tandem or,
- 5 percent of the design truck plus lane load or 5 percent of the design tandem plus lane load

Live Loads Contd . . .

g) Vehicular Collision Force: CT (Art. 3.5.6.2)

- Any structure within a distance of 9m from edge of highway for which collision protection is not provided, CT of 1800kN 1.2m above surface will be considered

5.4.3 Water Loads: WA (Art. 3.7)

a) Static Pressure

b) Buoyancy

c) Stream pressure

   i) Longitudinal

$$p = 5.14\times10^{-4} C_D V^2$$

Table 3.7.3.1-1 Drag Coefficient.

Type	C_D
semicircular-nosed pier	0.7
square-ended pier	1.4
debris lodged against the pier	1.4
wedged-nosed pier with nose angle 90° or less	0.8

ii) Lateral

$$p = 5.14\times10^{-4} C_L V^2$$

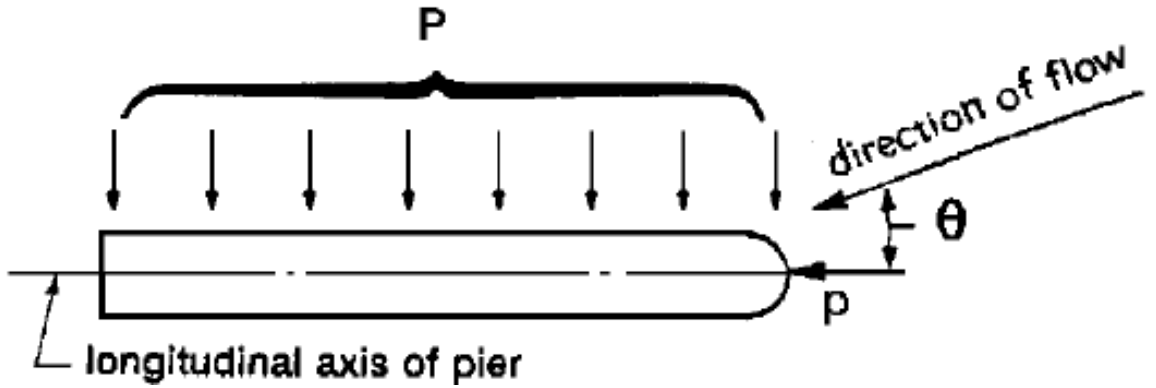

Angle, θ, between direction of flow and longitudinal axis of the pier	C_L
0°	0.0
5°	0.5
10°	0.7
20°	0.9
≥30°	1.0

5.4.4 Wind Loads (Art. 3.8)

a) *Wind Pressure on Structures: WS*

In the absence of more precise data, the design wind pressure, PD may be determined from

$$P_D = P_B \left(\frac{V_{DZ}}{V_B} \right)^2 = P_B \frac{V_{DZ}^{\ 2}}{25\ 600}$$

$$V_{DZ} = 2.5\ V_0 \left(\frac{V_{10}}{V_B} \right) \ln \left(\frac{Z}{Z_o} \right)$$

Defn. of terms

V_{DZ} = design wind velocity at design elevation, Z (km/hr.)

V_{10} = wind velocity at 10 000 mm above low ground or above design water level (km/hr.)

V_B = base wind velocity of 160 km/hr. at 10 000 mm height, yielding design pressures specified in Articles 3.8.1.2 and 3.8.2

Z = height of structure at which wind loads are being calculated as measured from low ground, or from water level, > 10 000 mm.

V_0 = friction velocity, a meteorological wind characteristic taken, as specified in Table , for various upwind surface characteristics (km/hr.)

Z_0 = friction length of upstream fetch, a meteorological wind characteristic taken as specified in Table (mm)

b) Wind Pressure on Vehicles: WL

- It is possible for the wind to blow when the vehicle is on the bridge
- This is taken moving interruptible force with the vehicle of 1.46kN/m acting normal and 1.8m above roadway surface

c) Aeroelastic Instability

- Aeroelastic force effects considered for wind sensitive components(span/depth or width>30)

5.4.5 Earthquake Effects: EQ

- Equivalent static EQ load Pe(x) is:

$$p_e(x) = \frac{\beta C_{sm}}{\gamma} w(x) v_s(x)$$

$$C_{sm} = \frac{1.2\,AS}{T^{2/3}} \le 2.5\,A$$

$$T_m = \frac{2\pi}{31.623}\sqrt{\frac{\gamma}{P_o g \alpha}}$$

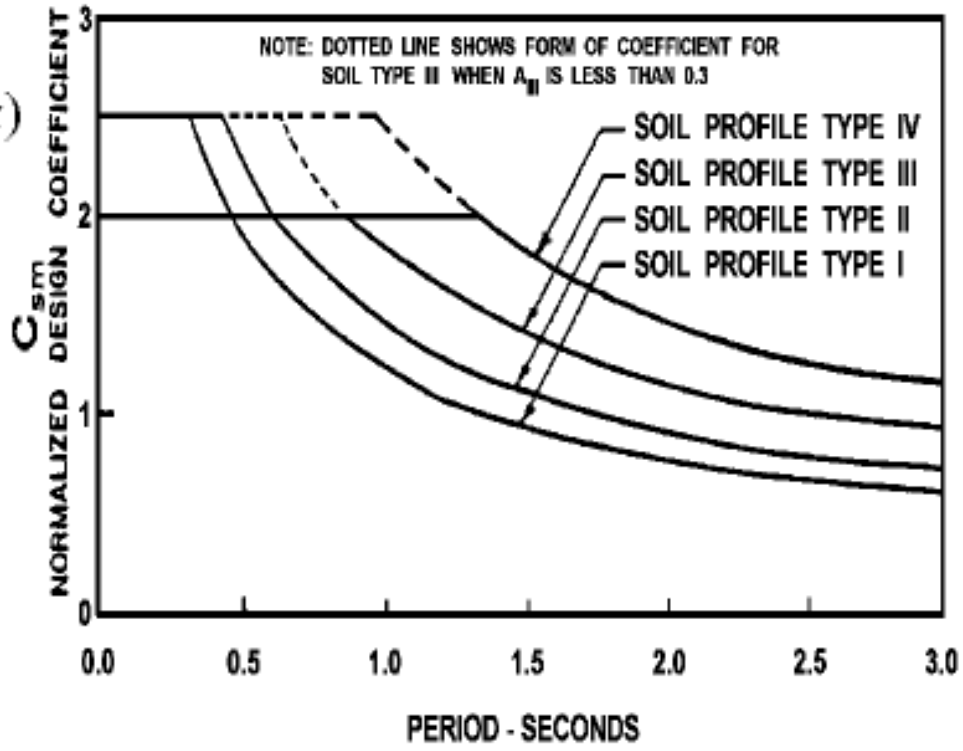

5.4.6 Earth Pressure: EH, ES, LS and DD

- Soil exerts lateral earth pressure on retaining walls
- Magnitude of earth pressure depends on
  - Type and density of soil
  - Soil-structure interaction
  - Degree of compaction
  - Location of GWT
  - Amount of surcharge
  - Earthquake effects

Table C3.11.1-1 Approximate Values of Relative Movements Required to Reach Active or Passive Earth Pressure Conditions (*Clough and Duncan 1991*).

Type of Backfill	Values of Δ/H	
	Active	Passive
Dense sand	0.001	0.01
Medium dense sand	0.002	0.02
Loose sand	0.004	0.04
Compacted silt	0.002	0.02
Compacted lean clay	0.010	0.05

Two Earth Pressure Theories

- Rankine
  - Assumptions are smooth and vertical wall, and sufficient wall motion
- Coulomb
  - Based on sliding wedge theory
  - Wall friction is considered
  - Cohesion is neglected

Earth Pressure Contd. . .

- Basic earth pressure varies linearly

  $P = k\gamma gh$

a) At Rest Earth Pressure Coefficient, $k_0 = 1\text{-}\sin\varphi'$

b) Active Earth Pressure Coefficient, k_a

c) Passive Earth Pressure Coefficient, k_p

Surcharge Loads: Earth Surcharge(ES), and Live Load Surcharge(LS)

ES is: $\Delta_p = k_s q_{s,}$ k_s is k_0, k_a or k_p as the case may be

LS is: $\Delta_p = k_s \gamma g h_{eq,}$ k_s is k_0, k_a or k_p as the case may be

Load factors for permanent loads

Load Factors for Permanent Loads, γ_p.

Type of Load	Load Factor	
	Maximum	Minimum
DC: Component and Attachments	1.25	0.90
DD: Downdrag	1.80	0.45
DW: Wearing Surfaces and Utilities	1.50	0.65
EH: Horizontal Earth Pressure		
• Active	1.50	0.90
• At-Rest	1.35	0.90
EL: Locked-in Erection Stresses	1.00	1.00
EV: Vertical Earth Pressure		
• Overall Stability	1.00	N/A
• Retaining Walls and Abutments	1.35	1.00
• Rigid Buried Structure	1.30	0.90
• Rigid Frames	1.35	0.90
• Flexible Buried Structures other than Metal Box Culverts	1.95	0.90
• Flexible Metal Box Culverts	1.50	0.90
ES: Earth Surcharge	1.50	0.75

5.5 AASHTO 2005 Load Factors & Load Combinations

Load Combination / Limit State	*DC* *DD* *DW* *EH* *EV* *ES* *EL*	*LL* *IM* *CE* *BR* *PL* *LS*	*WA*	*WS*	*WL*	*FR*	*TU* *CR* *SH*	*TG*	*SE*	Use One of These at a Time			
										EQ	*IC*	*CT*	*CV*
STRENGTH I (unless noted)	γ_p	1.75	1.00	—	—	1.00	0.50/1.20	γ_{TG}	γ_{SE}	—	—	—	—
STRENGTH II	γ_p	1.35	1.00	—	—	1.00	0.50/1.20	γ_{TG}	γ_{SE}	—	—	—	—
STRENGTH III	γ_p	—	1.00	1.40	—	1.00	0.50/1.20	γ_{TG}	γ_{SE}	—	—	—	—
STRENGTH IV *EH, EV, ES, DW* *DC* ONLY	γ_p 1.5	—	1.00	—	—	1.00	0.50/1.20	—	—	—	—	—	—
STRENGTH V	γ_p	1.35	1.00	0.40	1.0	1.00	0.50/1.20	γ_{TG}	γ_{SE}	—	—	—	—
EXTREME EVENT I	γ_p	γ_{EQ}	1.00	—	—	1.00	—	—	—	1.00	—	—	—
EXTREME EVENT II	γ_p	0.50	1.00	—	—	1.00	—	—	—	—	1.00	1.00	1.00
SERVICE I	1.00	1.00	1.00	0.30	1.0	1.00	1.00/1.20	γ_{TG}	γ_{SE}	—	—	—	—
SERVICE II	1.00	1.30	1.00	—	—	1.00	1.00/1.20	—	—	—	—	—	—
SERVICE III	1.00	0.80	1.00	—	—	1.00	1.00/1.20	γ_{TG}	γ_{SE}	—	—	—	—
SERVICE IV	1.00	—	1.00	0.70	—	1.00	1.00/1.20	—	1.0	—	—	—	—
FATIGUE—*LL*, *IM* & *CE* ONLY	—	0.75	—	—	—	—	—	—	—	—	—	—	—

Load factors for permanent loads

Load Factors for Permanent Loads, γ_p.

Type of Load	Load Factor	
	Maximum	Minimum
DC: Component and Attachments	1.25	0.90
DD: Downdrag	1.80	0.45
DW: Wearing Surfaces and Utilities	1.50	0.65
EH: Horizontal Earth Pressure		
• Active	1.50	0.90
• At-Rest	1.35	0.90
EL: Locked-in Erection Stresses	1.00	1.00
EV: Vertical Earth Pressure		
• Overall Stability	1.00	N/A
• Retaining Walls and Abutments	1.35	1.00
• Rigid Buried Structure	1.30	0.90
• Rigid Frames	1.35	0.90
• Flexible Buried Structures other than Metal Box Culverts	1.95	0.90
• Flexible Metal Box Culverts	1.50	0.90
ES: Earth Surcharge	1.50	0.75

BRIDGE SUB-STRUCTURES

- **Introduction**
- **Abutments**
- **Piers**

Introduction

- Substructure is part of a bridge supports the superstructure and transmits all loads to the foundation soil. It consists of the following elements:
- **Abutments** - are earth-retaining structures which support the superstructure at the beginning and end of a bridge. These are retaining walls with the additional function of supporting vertical permanent and transient loads
- **Piers** - are substructure elements that support the superstructure at intermediate points between abutments for bridges with two or more spans
- **Back Wall** - is the primary component of the abutment on which the superstructure structural members are supported
- **Wing Wall** - is a side wall of the abutment that

- The minimum height of piers and abutments is governed by
  - requirements of accessibility for maintenance of the superstructure and bearings,
  - protection against spray for bridges over water and vertical clearance requirements for floating debris for river bridges and
  - vertical clearance requirements for bridges over traveled ways
- There is no upper limit for pier heights except that imposed by economy

ABUTMENTS

- Structural elements of a bridge located at the ends of a bridge which provide the basic functions of
- Supporting the one end of the first or last span
- Retaining earth under the approach road way and
- Supporting the approach road way slab whenever necessary

- A variety of abutment forms are in use to serve the above functions. Selection of type depends on the magnitude of loads supported, depth to suitable bearing soil, scour depth, facing appearance and ease and cost of construction

Design of Abutments

a) Loads on Abutments

- An important load acting on abutments that need not be considered for piers is earth pressure and thus include loadings from the superstructure
- For seismic areas, seismic forces should be considered for the back face of the wall due to inertia of the retained soil mass
- AASHTO recommends to use the Mononobe– Okabe method, which is an extension of Coulomb's sliding wedge theory. This method gives horizontal and vertical inertia forces K_hW_s and $K_vW_{s,}$ where K_h and K_v are horizontal and vertical seismic coefficients, respectively given as a function of bed rock acceleration ration, and W_s is the weight of soil mass in the wedge. K_h and K_v are given by:
- **$K_h = a_o/2$ and**
- **$0.3K_hK_v \leq 0.5K_h$**
- **For free standing abutments**
- a_o - is bedrock acceleration ratio given by EBCS8:1995.
- If horizontal displacement is restrained like for abutments supported on batter piles
- $K_h = 1.5a_o$

6.2 ABUTMENTS

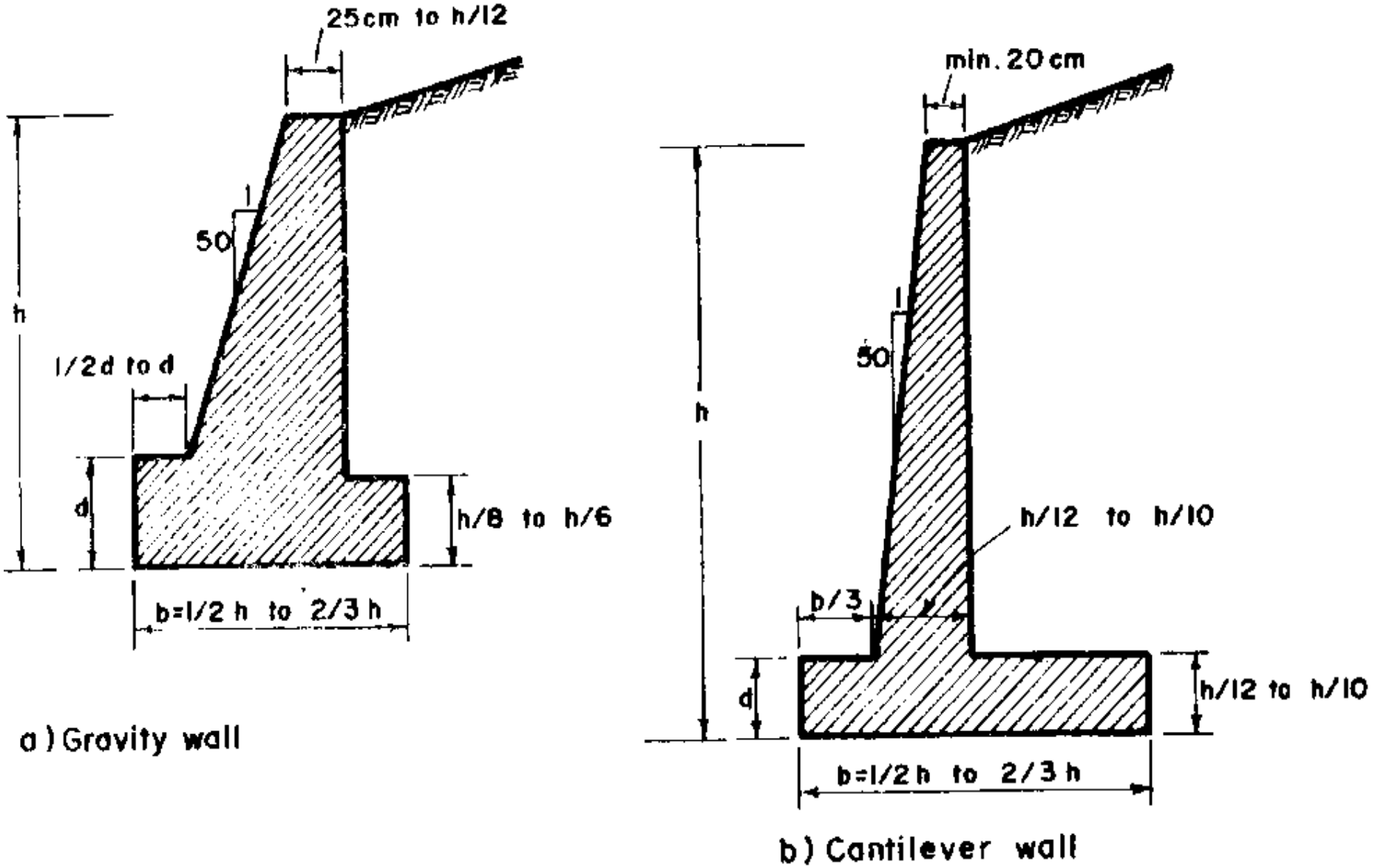

Gravity retaining wall b) Cantilever retaining wall

b) Design Criteria

- The length of abutment back wall is determined by the bridge width
- For a given trial position the **length** of the **wing walls** is dictated by terrain height of the bridge deck above ground and level of the HWM

- Abutment retaining walls will be dimensioned in the transverse direction to ensure stability against possible modes of failure by satisfying the following criteria for factors of safety (AASHTO Art. 5.5.5). The usual practice is to assign tentative dimensions and check for **overall stability**
  - **Overturning**
  - **Sliding**
- If factor of safety against sliding could not be obtained, shear key may be used at the bottom. Passive pressure will be considered for the key. The other alternative is to slope the footing (slope $\leq 10^0$)

- **Bearing Capacity of Foundation Soil**
  - $s_{max} \leq s_{all}$

- Location of resultant X from the toe is:
- $B/3 \leq X \leq 2B/3$ for base on soil
- $B/4 \leq X \leq 3B/4$ for base on rock
- After stability checks, cantilever and counter-fort retaining walls will be designed for internal forces. The stem and footings of a cantilever are designed as cantilever. The stem and footing portion of a counter-fort are designed as continuous one-way slab supported on the counter-forts. The footing portion at the front is designed as cantilever. If the section of the footing portion is uneconomically thick buttresses can be used to red
- Finally, it should be pointed c ide drainage facilities as show in

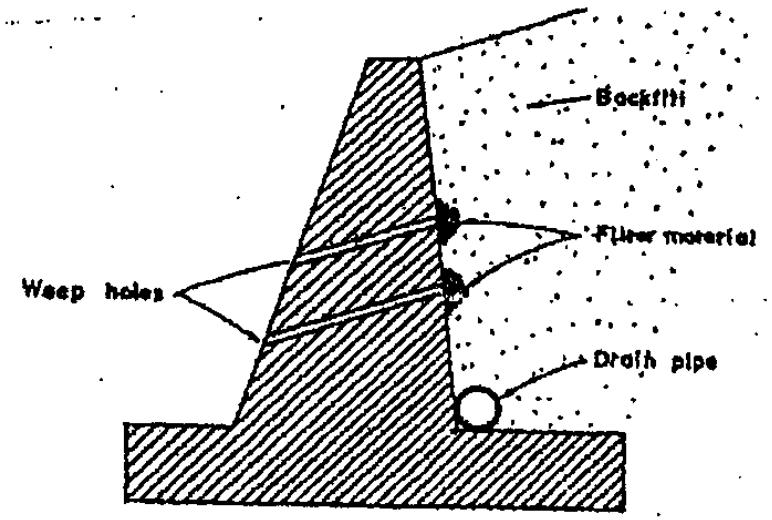

- **PIERS**
- Piers are structural elements at intermediate points of a multi-span bridge which sustain
  - superstructure dead and live loads, and also
  - carry their own weight and
  - transmit all loads to the foundation soil.
- Piers are constructed of masonry or reinforced concrete and are different types
- The selection of type greatly depends on the form and size of the superstructure. Aesthetics and economy are other factors to be considered in selection of pier type
- The arrangement and shape of piers should be such as to cause minimal obstruction to flow of water or traffic under the bridge.

Design of Piers

a) Loads on Piers

- Loads to be considered in the design of piers are:
  - Dead load of superstructure and the pier itself
  - In stability analysis the possibility of one span loaded by superstructure dead load while the other is not yet constructed should be considered.
  - Live load on bridge, AASHTO standard truck and lane loading
  - Impact effect of live loads: According to AASHTO highway live loads shall be increased to allow for dynamic, vibratory and impact effects for piers excluding footings and portions below the ground. For pile bents also impact shall be considered for portions above the ground. To simplify the work, impact is usually considered for the stem of masonry piers, and for frame of column bent and hammerhead piers. Impact is excluded for the design of footings.
  - Wind load acting on superstructure and on live load will be transferred to the substructure. Wind load acts directly on exposed areas of piers (abutments also). This will be decomposed in to transverse and longitudinal components for skewed wind direction.
  - Buoyancy shall be considered for submerged parts. This can be neglected if the pier is anchored to rock by dowels.

- Forces of stream current due to flowing water
- Longitudinal forces due to attractive effect and breaking of vehicles is given as 5% of the live load in all lanes headed in one direction. The load used the lane load with the concentrated force for moment. The point of application of this force is 6ft above the floor slab and to be transmitted to the substructure through the superstructure. To this should be added longitudinal force due to resistance in bearings. In order to reduce the net longitudinal force in bearings, it is common to make bearings of two spans located on a pier of the same type, i.e., **expansion bearings** or **fixed bearings.** Still a variation of about 10% in the friction coefficients of sliding bearings may be assumed.
- Centrifugal forces should be considered for curved bridges.
- In regions where earthquakes are anticipated, bridges shall be designed to resist earthquake motions by considering the relative location of the site from active faults, seismic response of the soil at the site, and the dynamic response of the total bridge. For simple bridges, the equivalent static force method can be used to determine seismic loading. The factors that are dependent on locality cannot be adopted from AASHTO. The specifications of EBCE: 8, 1995 shall be used for these.
- Force due to collision of bridge in navigable water during storms

- **Section Analysis**
- In the analysis of a pier section, subjected to the most critical loading conditions, compilation of stresses for serviceability and capacity for maximum loads is involved. Modern aesthetics often require that an analysis be made for irregular and nonsymmetrical shapes. In addition to vertical reinforcement, it is essential to evaluate the requirements for lateral reinforcing (hoops, ties, and spirals).
-
- In general, bridge pier sections are governed by moment and not axial load. Therefore, the most critical loading of all the many possible loadings on a pier will be the one that produces the largest moment about the weakest pier axis. When two loads produce similar moments, with variations in load, the load producing the maximum eccentricity will normally controls.

- The AASHTO design specifications indicate that biaxial bending and direct load should be analyzed at ultimate load, based on stress and strain compatibility, or, as an alternate, by approximate formulas

BRIDGE SUPERSTRUCTURE

- ✓ ***Introduction***
- ✓ ***Reinforced Concrete Bridges***
- ✓ ***Steel Bridges***

Introduction

- Efficient design of superstructure results in overall economy
- A clear understanding of superstructural behavior under loads is essential for efficient design
- Superstructure structural elements: slab, stringers (RC, PSC, steel, composite),

Introduction Contd. . .

- Determining member forces in these elements is essential
- Methods of analysis: static or dynamic
- Static analysis: for structures insensitive to dynamic action
  - IM is sufficient to account for dynamic effect
  - SMALL DEFORMATION THEORY is used
- Dynamic analysis: for those sensitive to dynamic effects of vehicular live loads, wind and earthquake
  - Susceptibility to vibration and large deformation
  - IM is too small to take care of dynamic effects
  - LARGE DEFORMATION THEORY should be used

Reinforced Concrete

- Two principal materials used in superstructure construction are steel and concrete
- Advantages of RC bridges over steel
  - Adaptability to variety structural shapes and forms, and can be given desired aesthetic appearance
  - Low cost of maintenance and Long life
  - Better resistance to temporary over loads and dynamic loads
  - Cast in place RC are continuous and

Reinforced Concrete Contd. . .

Disadvantages of concrete

- Large dead weight, which require larger foundation
- Difficulty to widen or rebuild
- Longer construction time
- Requires formwork and false work, which are expensive

Advantages of steel

- high strength, homogeneous material: smaller depth
- faster construction

Disadvantages of steel

- Corrosion: high maintenance cost
- Fatigue problem

Bridge deck is the medium on which most loads act and get transferred to other components (Fig. shows load path)

Box Girder Bridges

- Economical for spans from 25 m to 45m
- Can be cast insitu reinforced concrete or pre-stressed
- When the spans are longer than 45m, they need to be pre-stressed

- Top slab, webs and bottom slab are built monolithically to act as a unit, as a result, full shear transfer provided between all parts of the section.
- Thus, have high torsional resistance due to their closed shape and are particularly suitable for structures with significant curvature.
- This construction also lends itself to aesthetic treatment
- **Box girder bridges advantages over other types (T girders)**
- Shallow depth are required;
- Possibility of monolithic construction of the superstructure and substructure such as pier caps for continuous box girders can be placed within the box, facilitating rigid connection to the pier;

Box Girder Bridges Contd. . .

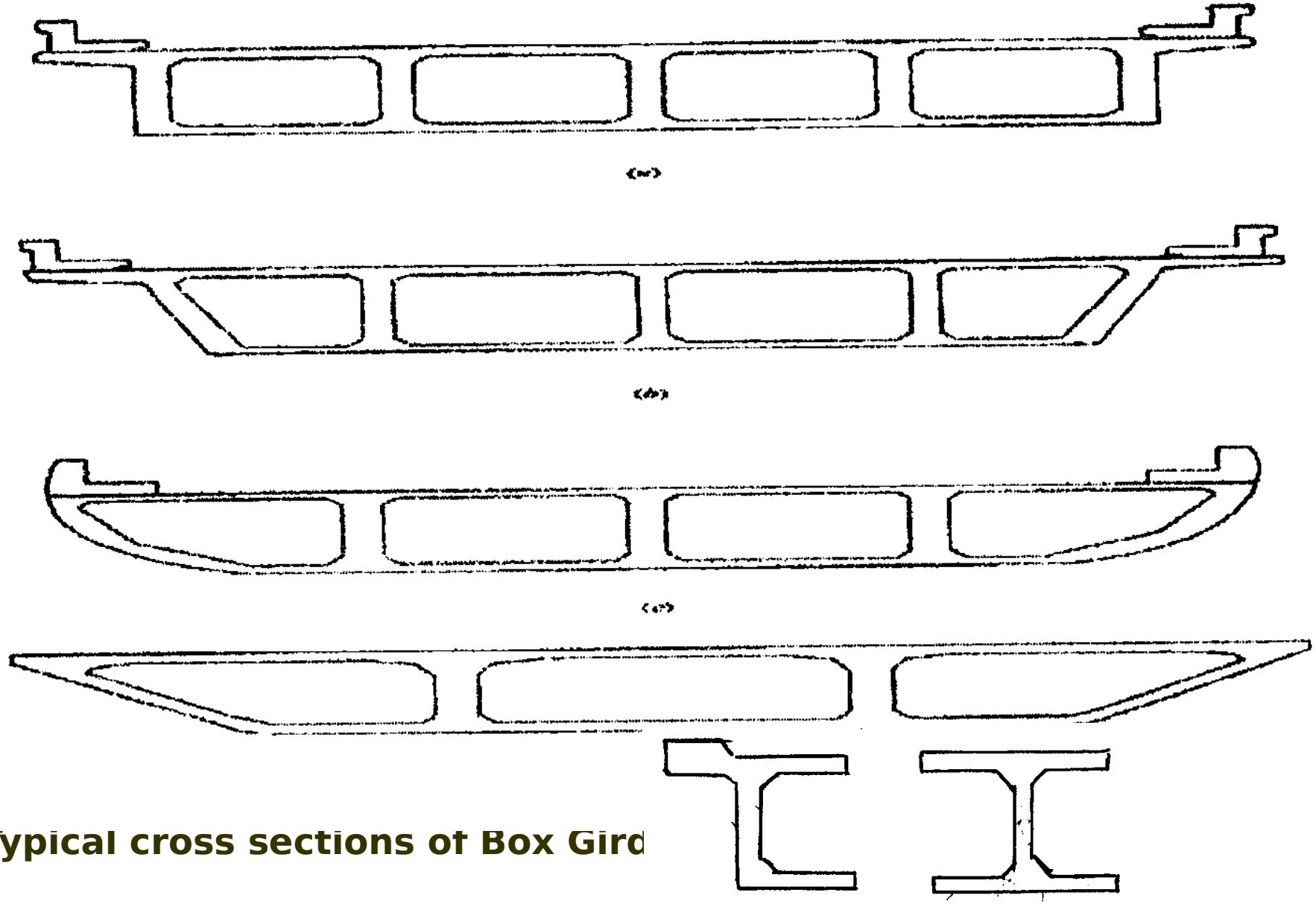

Typical cross sections of Box Gird

Box Girder Bridges Contd. . .

Cross-sections are taken as shown in the Figure below, for analysis for exterior and interior girders, respectively. The structural analysis is same as for T-beams. Section analysis is also same except the compression bottom flange for continuous spans. The entire slab width is assumed effective

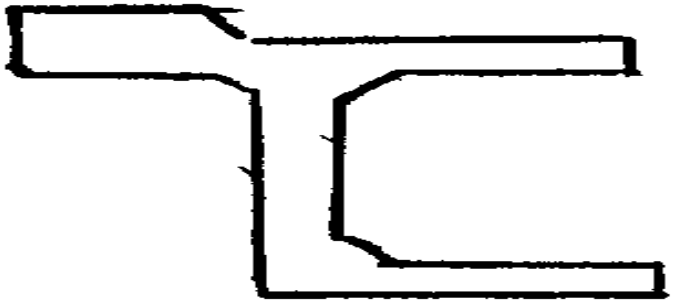

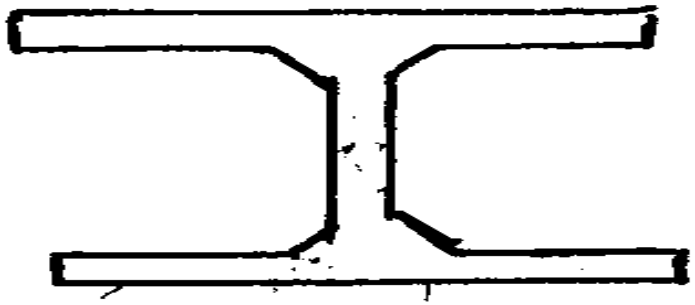

- ***Proportions***
- Depth - is dictated by deflection requirement
- D = 0.06L for simple spans
- D = 0.045L for precast, cast-in-pace pre-stressed, simple spans
- D = 0.040L for continuous spans

Box Girder Bridges Contd. . .

- Top slab thickness: minimum is 175mm
- Bottom slab thickness has no requirement except 140mm minimum thickness required for placing concrete around reinforcement
- **Webs**
- There are no provision in the AASHTO specifications governing the spacing and thickness of webs (girders). Their primary purpose is to resist shear and only a small portion of the moments. Optimum web spacing are suggested to be between 2.1 and 2.75m for span up to 45m, and as much as 3.66 for longer spans.
- A web thickness of 200mm is considered a desirable minimum for practical considerations for shear reinforcement and concrete pouring. For pre-stressed concrete, a minimum of 300mm is used for placement of tendon ducts

Continuous Reinforce Concrete Bridges

- ***Advantages -*** Continuous Reinforce Concrete Bridges
  - **Less number of bearings** than simply supported bridge since one line of bearings are used over the piers
  - **Reduced width of pier, thus less flow obstruction and less amount of** material.
  - Requires **less number of expansion** i.e., less initial and maintenance cost The **rigidity quality** over the bridge is thus **improved**
  - **Lesser depth of girder**, hence economical supports
  - **Better architectural appearance**
  - **Lesser Vibration and deflection**
- **The deck system can be slab, T-beam or box section**
- **Disadvantages -** Continuous Reinforce Concrete Bridges
  - Analysis is laborious and time consuming

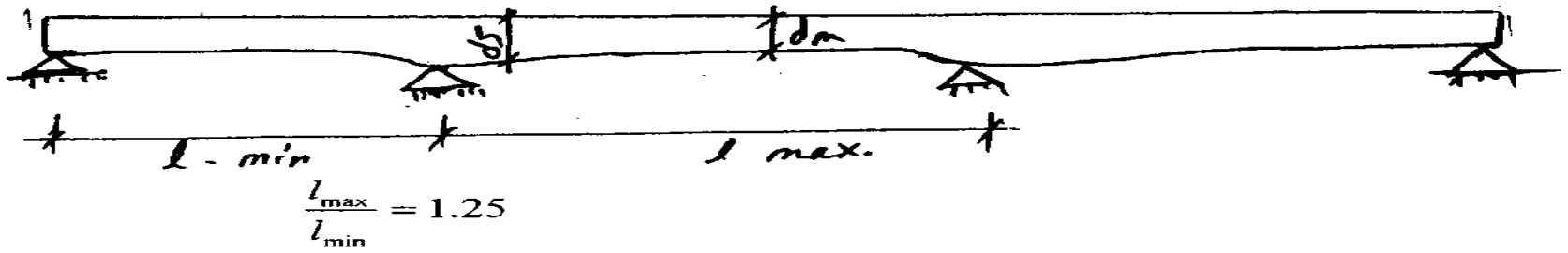

Continuous Reinforce Concrete Bridges

- **Figure *.*: Piccolo Abay continuous haunched RC girder**



Figure *.*: Abay bridge on Bure-Nekemt Road, continuous haunched RC



Continuous Reinforce Concrete Bridges

- **Figure *.*:** Balanced cantilever method of construction with moving



Reinforce Concrete Rigid Frame Bridges

- Rigid Frame Bridges
- The deck is rigidly connected to the bridge and piers and all the advantages of a continuous span bridge prevails here also
- Additional advantages and disadvantages includes
- More rigidity
- Less moments in deck being partly transferred to the supporting members
- No bearings
- Better aesthetic appearance than the continuous span structure
- As in continuous span bridges, these structures also require unyielding foundation materials.
- The analysis is however, more laborious than the former
- The frames may be hinged or fixed at the base

Reinforce Concrete Rigid Frame Bridges

- ***Hinged base:*** The moments carried over to base rotate the vertical supports, reducing the moments considerably and no moments are carried over to the footings
- The vertical load and the moment caused by the thrust at the hinge level are to be considered in designing the footings
- The moments at the base of supports are small but the span moments are greater than those of fixed frames

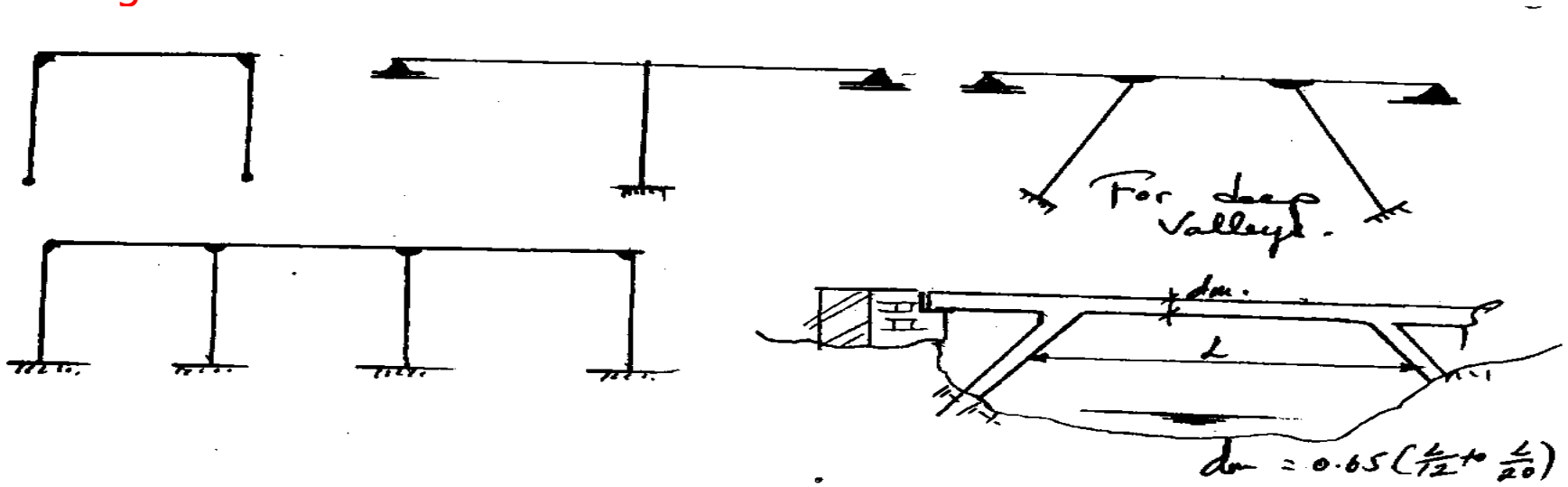

Figure *.*: Rigid frame bridges

- **Fixed base:** The moments from the superstructure carried over to the footings since the vertical supports cannot rotate independently without rotating the footings along with them. This state is achieved if the foundation rests on solid rock or unyielding foundation

Steel Bridges

- Construction consist of rolled steel beams, plate girders or trusses with reinforced concrete deck or steel plate deck-beam bridges
- Advantages
- High quality, homogeneous, isotropic material that is perfectly elastic to its yield point.
- High tensile and compressive strengths
- Past the yield point, it offers considerable ductility to provide a large reserve strength
- Can be built faster than reinforced concrete or pre-stressed concrete They can be erected with ease and minimizing construction costs
- Usually lighter than concrete superstructures which translates into reduced substructures costs, which can be significant when soil conditions are poor
- Steel superstructures can be designed with shallower depth than RC, which is an important consideration when overhead clearance is required

Steel Bridges

- Major disadvantages: Corrosion of steel and requires prohibitively high maintenance cost. Corrosion can reduce cross section of structural members and thus, weaken the superstructure
- Steel fatigues under repeated loading (its strength decreases under repeated loading at high number of cycles of loading)
- Types of steel bridges
- **1 Rolled Steel Beam Bridges**
- Common for short and medium span highway bridges
- Consists of equally spaced rolled beams place parallel to traffic to span between supports and
- Transversely spanned by cast-in-place reinforced concrete slab that serves as bridge deck and providers lateral stability to stringers
- Diaphragms are provided at the ends and at intermediate points to provide lateral stability
- They are classified as composite or non-composite
- In a non-composite structure, steel beams act independently of the deck slab in resisting both the dead load as well as the live loads

Steel Bridges

- In composite construction, the dead loads are resisted by the steel beams alone (assuming unshored construction), whereas the superimposed dead loads and live loads are resisted by the composite action of the slab and the steel beam acting as a unit. Shear connectors are required in this case in the form of

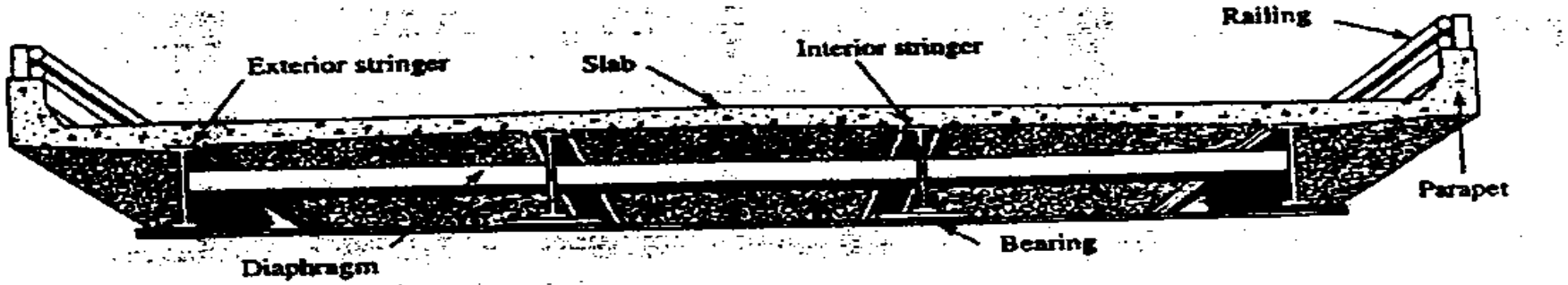

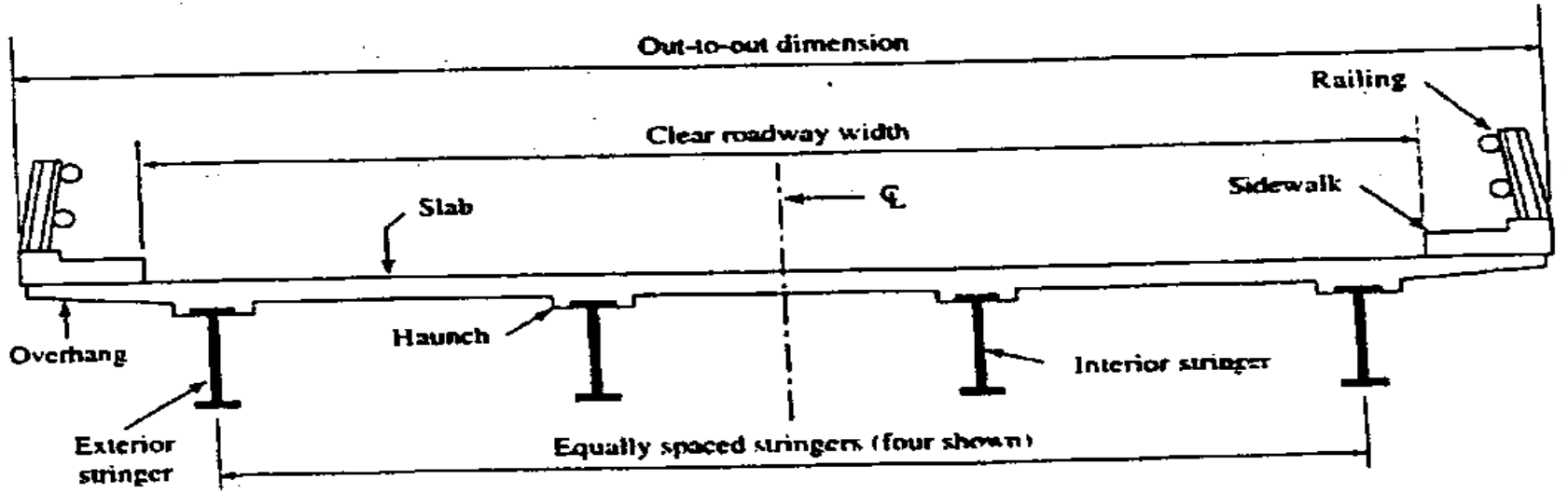

Steel Bridges

2 Plate Girder and Steel Box Girder Bridges

- These bridges are built up sections made of plates by welding, bolting or riveting. The decks are made of RC. They are suitable for medium to long span bridges.
- Additional plates can be bolted, riveted or welded to the plate girder to provide added strength at sections of maximum

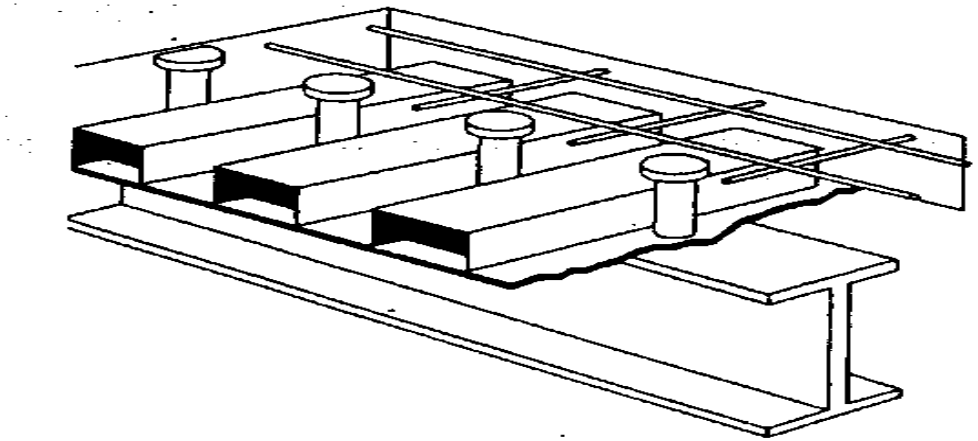

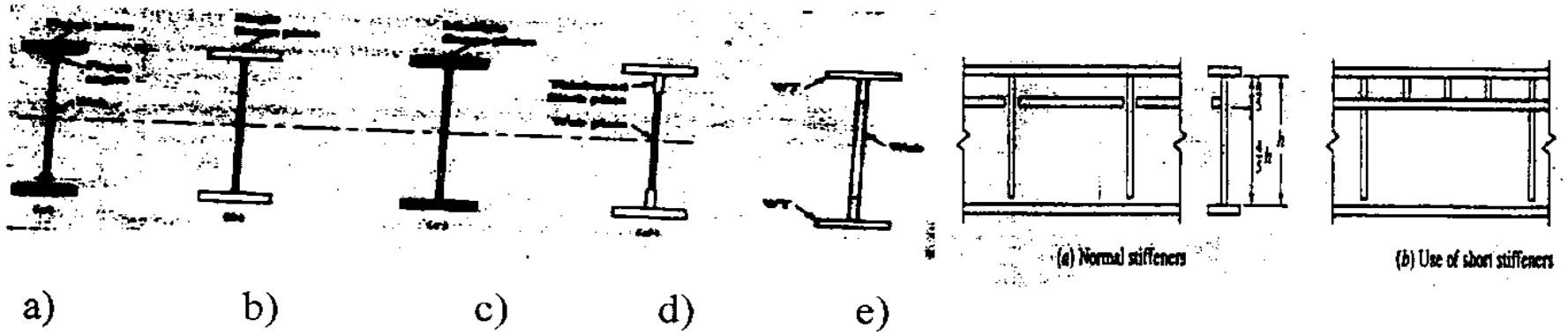

Steel Bridges

- Due to high depth-to-thickness ratio of their webs (h/t_w), webs can buckle under compression. These are overcome by stiffening as in the Figure below. Lateral braces should also be provided as shown in Figure below to resist wind force that can act over their large exposed area

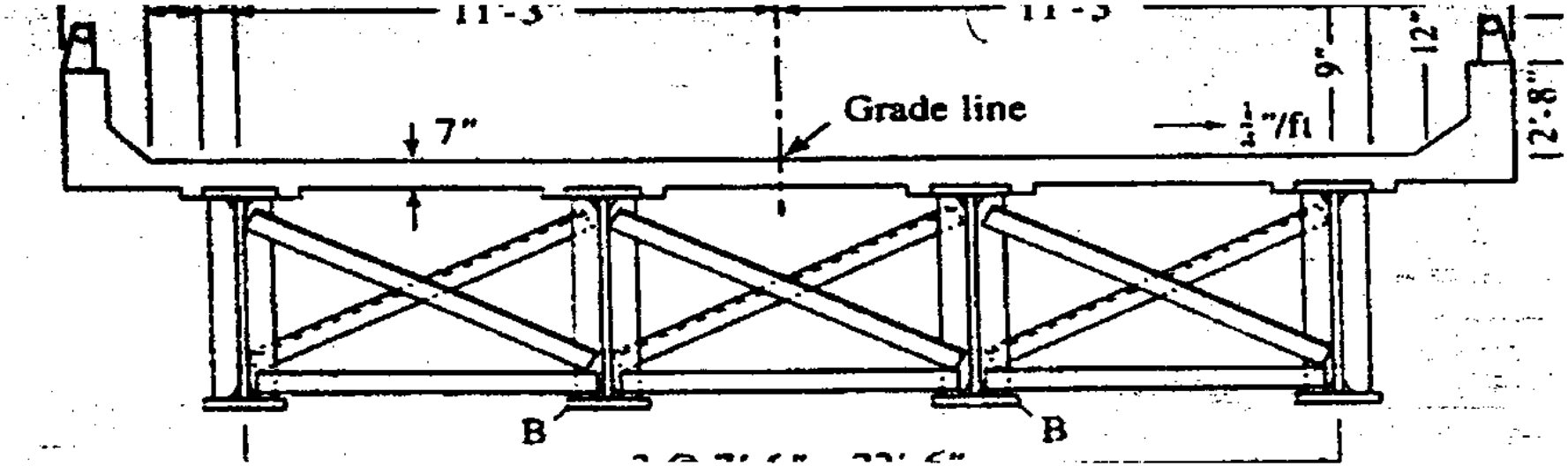

Steel Bridges

- Composite steel box girder constructions are used for medium to long spans. Figure on next plate shows various type of composite box girder bridges. This can be used for curves and super elevations

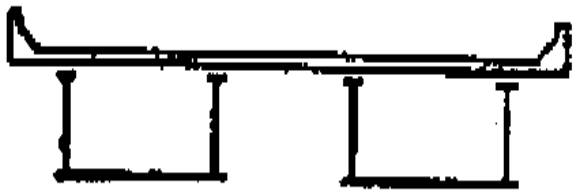

Vertical web



Inclined web



Combination



Superelevated cross section

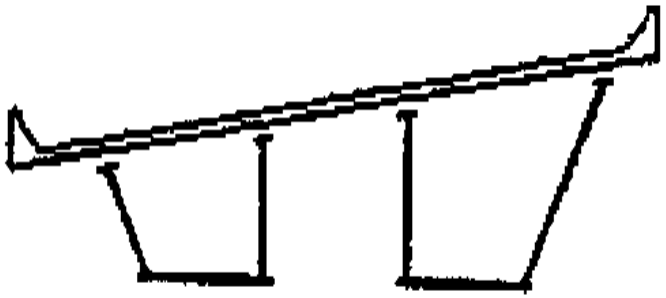

Superelevated cross section, level soffit

Steel Bridges

3. **Steel Truss Bridges**

   Used for medium to long span crossings

   Problem - requires prohibitively high maintenance cost and fatigue

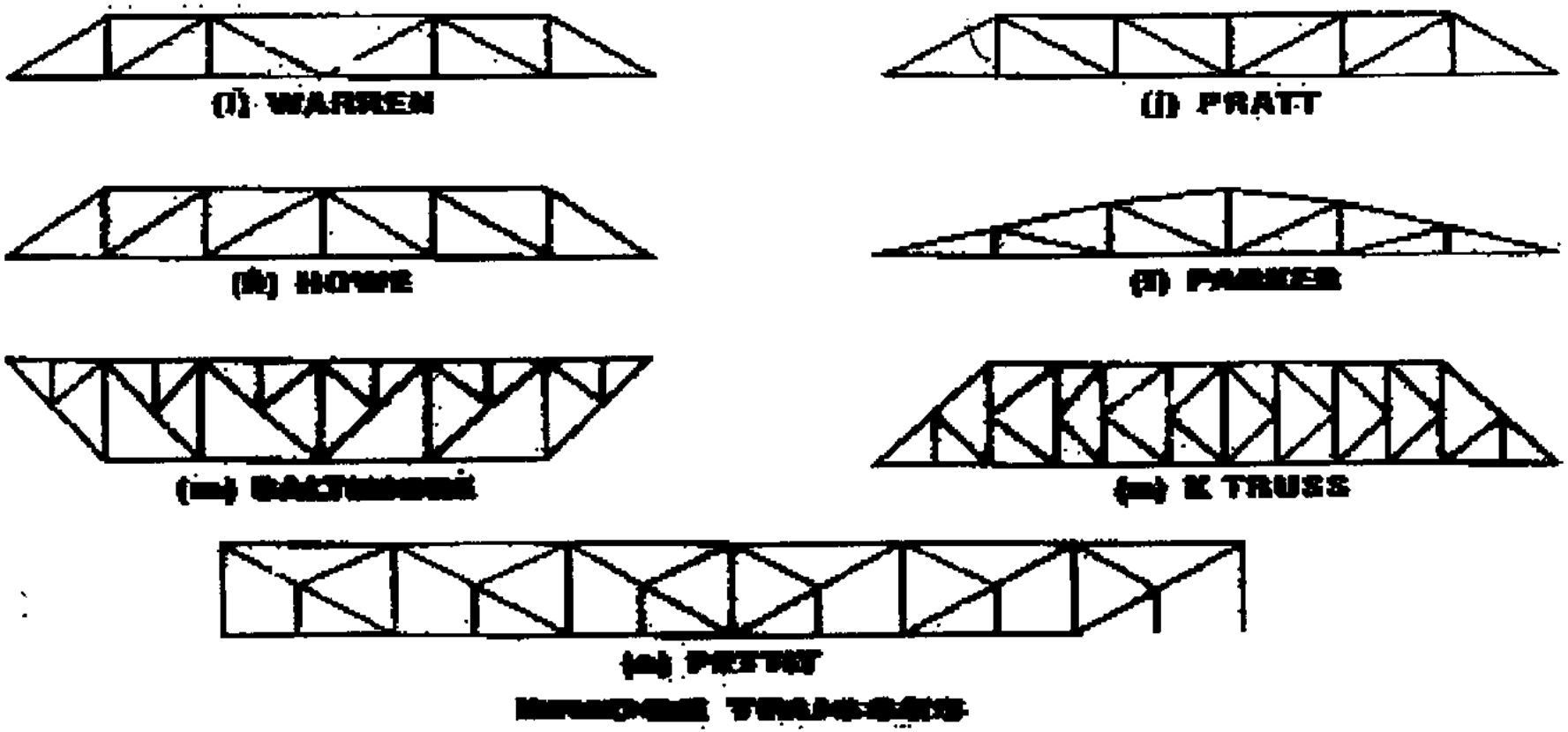







Steel Bridges

4 Plate Deck – Stringer Bridges

- Orthotropic plate deck and steel plate deck box girder bridges are commonly used for long span bridges in girder bridges or with trusses and girders in cable-stayed and suspension bridges. Figure below

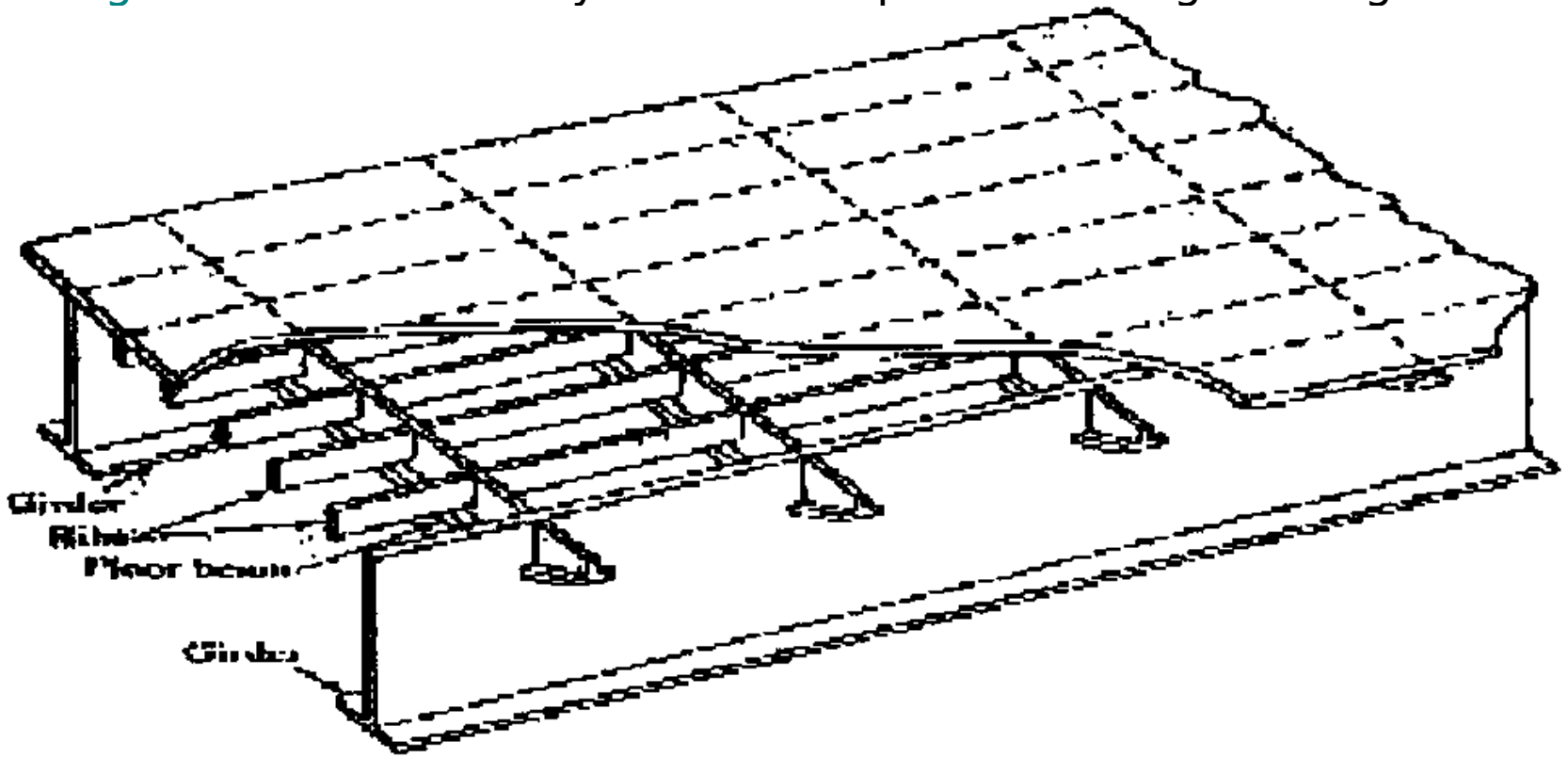

- PLEASE REFER SLAB BRIDGE DESIGN EXAMPLES (*ATTACHED HERE*)