ETHIOPIAN UNIVERSITY PRE-ENTRANCE PHYSICS EXAM

SUBJECT CODE: 08
TIME ALLOWED: 2 HOURS

GENERAL DIRECTIONS

THERE ARE A TOTAL OF 50 MULTIPLE CHOICE QUESTIONS. CAREFULLY SELECT THE BEST ANSWER AND CHOOSE ONLY THE LETTER OF YOUR CHOICE.

YOU CAN PASS A QUESTION THAT YOU ARE UNCERTAIN ABOUT AND BACK LATER IF YOU HAVE TIME TO CHECK AGAIN. BUT IF TIME IS UP, QUESTIONS THAT HAVE BEEN ANSWERED ON TIME WILL GET SUBMITED AND THE BOT WILL MARK ONLY IT.

YOU ARE ALLOWED TO WORK ON THE EXAM FOR 2 HOURS.

TARGETED GROUP: NATURAL SCIENCE STUDENTS

@fetena_net

PREPARED BY FETENA NET
- @fetena_net

1) In science an educated guess is called a/an:

A/ Conclusion
B/ Question
C/ Hypothesis
D/ Observation

2) The dimensions of a cube are measured with vernier calipers. The measured length of each side is 20.00mm as shown in the figure below. If the vernier calipers can be read with an uncertainty of ± 0.1mm. What is the approximate percentage uncertainty in the value of the volume ?

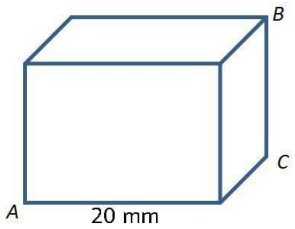

A/ 0.5%
B/ 2%
C/ 5%
D/ 0.2%

3) A ball is thrown with a velocity of 20m/s at an angle of 30° to the horizontal. The mass of the block is 500g. What is the maximum height reached by the ball?

A/ 5m
B/ 3m
C/ 8m
D/ 4m

4) Two balls at the same temperature collide.
What is conserved ?

A/ Velocity
B/ Temperature
C/ Momentum
D/ Kinetic energy

@fetena_net

5) A ball rolls off the edge of a horizontal table top 4m high. It strikes the floor at a point 5m horizontally away from the edge of the table.
How long was the ball in the air in seconds?

A/ 2/√3
B/ 3/√5
C/ 1/√5
D/ 2/√5

6) A see saw of length 4m pivoted at its center rests in a horizontal position. A boy of mass 18kg,sits on one end. How far from the center should his sister of mass 30kg sit if the seesaw is to balance?

A/ 0.30m
B/ 1.2m
C/ 3.3m
D/ 0.71m

7) The necessary and sufficient condition for a rigid body to be equilibrium is the sum of:

A/ All torques acting on it is zero.
B/ All forces acting on it should be zero.
C/ All forces should be equal in magnitude but opposite in direction to the sum of all torques acting on it.
D/ All forces and the sum of all torques be zero.

8) Which of the following objects has the largest moment of inertia assuming they all have the same mass and radius?

A/ A solid disk
B/ A solid sphere
C/ A circular loop
D/ A solid cylinder

9) A solid sphere is rotating in free space. If the radius of the sphere is increased keeping mass same. Which one of the following will not be affected?

A/ Angular velocity
B/ Angular momentum
C/ Moment of inertia
D/ Rotational Kinetic energy

@fetena_net

10) Two particles collide and comes to rest. The first particle of mass m_1 moves with a velocity v_1 before the collision. If the mass of the second mass is twice the mass of the first mass,
What is the velocity of the second mass before collision?

A/ $-v_1/4$
B/ $-v_1/2$
C/ $v_1/4$
D/ $v_1/2$

11) A truck is facing down a slope of 30°. The truck has a mass of 3000kg. The driver let's of the brake and the truck accelerates down the slope.
What is the acceleration as a vector in component form?

A/ (2.5, 4.33)
B/ (3.5, 5.33)
C/ (4.33, 2.5)
D/ (5.33, 3.5)

12) A block is placed on an inclined plane. The plane is then raised until it makes an angle x with the horizontal. If the coefficient of friction for the block and plane is 0.3, then what is the value of x to which the plane may be raised before the block begins to slide?

A/ 45°
B/ 30°
C/ 22°
D/ $\tan^{-1}(0.3)$

13) Ahmed threw a rock straight upward from the top of a hill with a velocity of 30m/s. The hill is 100 meters tall. What is the time needed in seconds for the rock to return at the level of Ahmed?

A/ 6.1
B/ 5.3
C/ 4.2
D/ 3.4

14) At what angle of projection the maximum height and the range of a projectile get equal?

A/ $\tan^{-1}(1)=45°$
B/ $\tan^{-1}(3)=71.57°$
C/ $\tan -^{1}(4)=75.96°$
D/ $\tan^{-1}(2)=63.44°$

@fetena_net

15) Which of the following is not a vector quantity?

A/ Flux density
B/ Linear momentum
C/ Torque
D/ Magnetic field intensity

16) For two non zero vectors A and B, if $|A + B|=|A|+|B|$, then

A/ A and B are parallels and in the same direction
B/ A and B are parallel and in opposite direction
C/ The angle between A and B is 45°
D/ The angle between A and B is 60°

17) The value of $i.(j\times k)$is:

A/ 0
B/ +1
C/ -1
D/ +2

18) The position of a particle moving Along the x axis is given by $x=t^2 + 8t$. Where x axis is in meters and t in seconds.
What is the speed of the particle at t=1 sec?

A/ 6m/s
B/ 12m/s
C/ 8m/s
D/ 10m/s

19) A bird is flying towards north with a velocity of 40km/h towards east. What is the velocity of the bird noted by a man in the train?

A/ $40\sqrt{2}$ km/h north east
B/ $40\sqrt{2}$km/h north west
C/ $40\sqrt{2}$ km/h south east
D/ $40\sqrt{2}$ km/h south west

@fetena_net

20) A 100kg box is pushed at a constant speed up the smooth 30° inclined plane as shown in the figure below.

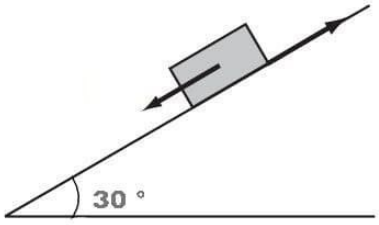

What horizontal force F is required ?

A/ 577.35 N
B/ 1000.35 N
C/ 1732.35 N
D/ 1154.70 N

21) Traffic light weighing 300kg is suspended from a cable as shown in the figure below.

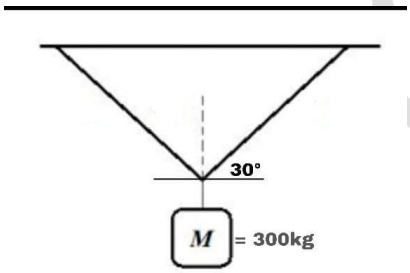

What is the tension T in the string?

A/ 100N
B/ 200N
C/ 300N
D/ 400N

22) When stretched beyond its elastic limit, a metal rod such as steel:

A/ Becomes elastic
B/ Has no energy
C/ Obeys Hook's law
D/ Becomes plastic

23) The statement " A body will continue in its state of rest or in uniform motion unless a net force acts on it " is known as:

A/ Law of inertia
B/ Law of acceleration
C/ Law of action and reaction
D/ Law of gravitation

24) A wooden box loaded with books is given a push on a concrete floor. An initial velocity of 8 m/s was imparted to it.
How far the box moves in metres before coming to stop, if the coefficient of kinetic friction between the box and the floor is 0.8?

A/ 5.07
B/ 6.04
C/ 4.08
D/ 7. 10

25) Water strider is an insect that can stride or walk on the surface of water. Which one of the following condition of the water may cause this insect to sink down when it moves on the water surface ?

A/ Cooling the water
B/ Increasing the surface of the water
C/ Warming the water
D/ Increasing the depth of the water

26) The statement that stated " The buoyant force acting on a body immersed in a fluid displaced by the body "
Can be the statement of:

A/ Pascal's law
B/ Archimedes principle
C/ Stock's law
D/ Bernoulli's Principle

27) At what depth of the water in a pond, the pressure of the water equal to twenty five times the pressure of the atmosphere ?

A/ 0.30 m
B/ 1.2 m
C/ 3.3 m
D/ 0.71 m

@fetena_net

28) The phenomena that the movement of liquid in thin tube and the flow of liquid through porous material can be explained by which property of liquid ?

A/ Viscosity
B/ Surface tension
C/ Surface energy
D/ Capillary action

29) In a normal adult, the average speed of the blood through the aorta which has a radius 0.9 cm is 0.2 m/s. The blood goes from aorta into the major arteries, which are 30 in number, each with a radius of 0.3 cm. What is the speed of the blood through the arteries?

A/ 0.6 m/s
B/ 0.4 m/s
C/ 0.06 m/s
D/ 0.04 m/s

30) The process in which no transfer of energy is allowed between the system and the surrounding is:

A/ Isothermal
B/ Isochoric
C/ Isobaric
D/ Adiabatic

31) A gas in a closed container is heated with 10J of energy, causing the lid of the container to rise 2m with 3N of force.
What is the change in internal energy of the system ?

A/ 4 J
B/ 1.67 J
C/ 2.62 J
D/ 2.87 J

32) For an ideal gas of density let to be ¶ and pressure p at a given temperature,
which one of the following alternatives can be the representation of root mean square speed (crms) of the particle of the gas ?

A/ √3p\¶
B/ √3¶/p
C/ √p/3¶
D/ √¶/3p

@tetena_net

33) If a heat engine operates between 127°c and 677°c, what will be its maximum theoretical efficiency?

A/ 31%
B/ 48%
C/ 58%
D/ 69%

34) When two sound waves of the same amplitude and speed but slightly different in frequency are interference, the result is called

A/ Standing waves
B/ Destructive interference
C/ Beats
D/ Stationery waves

35) The intensity of sound produced from a certain explosion at a distance 50m is detected by the listener as 28 kW/m². What is the intensity of this sound at a distance of 100m ?

A/ 56 kW/m²
B/ 18 kW/m²
C/ 11k w/m²
D/ 7 kW/m²

36) The kinetic energy of a body in simple harmonic motion at a distance of 2.5 cm from the equilibrium position is three - fourth of the total energy.
What is the amplitude of the motion?

A/ 5cm
B/ 7.5cm
C/ 10cm
D/ 12.5cm

37) A narrow pipe is 20cm long and is opened at the top end and closed at the bottom. As the wind blows across the top, sound is produced at its fundamental frequency. If the speed of sound is 340m/s, what are the first three harmonic frequency at which sound is produced as the wind is blowing harder?

A/ 425Hz, 850Hz, 1275Hz
B/ 425Hz, 1275Hz ,2125Hz
C/ 850Hz, 1700Hz, 2550Hz
D/ 850Hz, 2550Hz, 425Hz

@fetena_net

38) Bright colour from Spider's web when exposed to sun light is due to:

A/ Reflection
B/ Refraction
C/ Interference
D/ Diffraction

39) Two monochromatic light waves are coherent if :

A/ They are in phase
B/ They have constant phase difference
C/ They travel equal distance
D/ They have equal amplitude

40) A ray of light travels through a transparent slope with a speed of 2×10^{8}. This implies that the refractive index of the slab is :

A/ 1.5
B/ 0.662
C/ 2
D/ 6

41) In Young's double slit experiment, the separation between the slits is halved and the distance between the slits and the screen is doubled. The fringe width will be:

A/ Doubled
B/ Halved
C/ Quadrupled
D/ Remain the same

42) The capacitance of a capacitor does not depend on:

A/ The shape of the plates
B/ The size of the plates
C/ The change on the plates
D/ The separation between the plates

@fetena_net

43) An air filled parallel plate capacitor had a capacitance of 1 pf, when the plate separation is doubled and filled with wax,the capacitance increase to 2 pf.
What is the dielectric constant of the wax?

A/ 4
B/ 2
C/ 6
D/ 8

44) The figure below shows that A 4 microfarad capacitor is connected in parallel to another capacitor of 8 microfarad. Both are then connected in series with a 12 microfarad capacitor and charged to 20%.

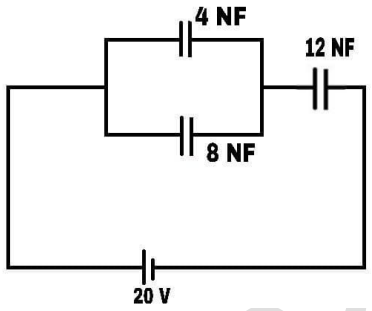

What is the charge on the 4 microfarad capacitor?

A/ 3.3 microcoulomb
B/ 40 microcoulomb
C/ 80 microcoulomb
D/ 240 microcoulomb

45) A copper wire is stretched so that it's length increases and its diameter decreases as a result :

A/ Resistance decrease and its resistivity remains the same
B/ Resistivity decreases and its resistance remains the same
C/ Resistance increases and its resistivity remains the same
D/ Resistivity increase and its resistance remains the same

46) The resistance of a wire is 50Π(ohm), if it is stretched to double length, its new resistance will be:

A/ 20Π
B/ 200Π
C/ 100Π
D/ 10Π

@fetenu_net

47) When a south pole is placed in the magnetic field of a north pole, the South pole moves toward the north pole and its potential energy become:

A/ Decreases
B/ Increases
C/ Remains unchanged
D/ Gets doubled

48) In an ammeter, 4% of the main current is passing through galvanometer. If the galvanometer is shunted with a 5 Π(ohm) resistance , then the resistance of the galvanometer is:

A/ 4Π
B/ 5Π
C/ 20Π
D/ 120Π

49) What is the main reason why alternating current is used to transmit electricity?

A/ To minimize power gain
B/ To minimize energy loss
C/ To minimize voltage gain
D/ To maximize current gain

50) Dual nature of radiation is shown by:

A/ Diffraction and reflection
B/ Refraction and diffraction
C/ Photoelectric effect
D/ Photoelectric effect and diffraction

@fetena_net